Above picture is a simple drawing for the anchor bolt installation. The Assembly order is shown below.

1. Mark position on the wall. Horizontally 90mm and vertically 110mm.
2. Use hammer drill & concrete 8mm drill bit to drill a hole with a depth of 40mm or more on the marked positions.
3. Remove dust from the holes.
4. Use rubber hammer to insert anchors into the holes drilled on the wall.

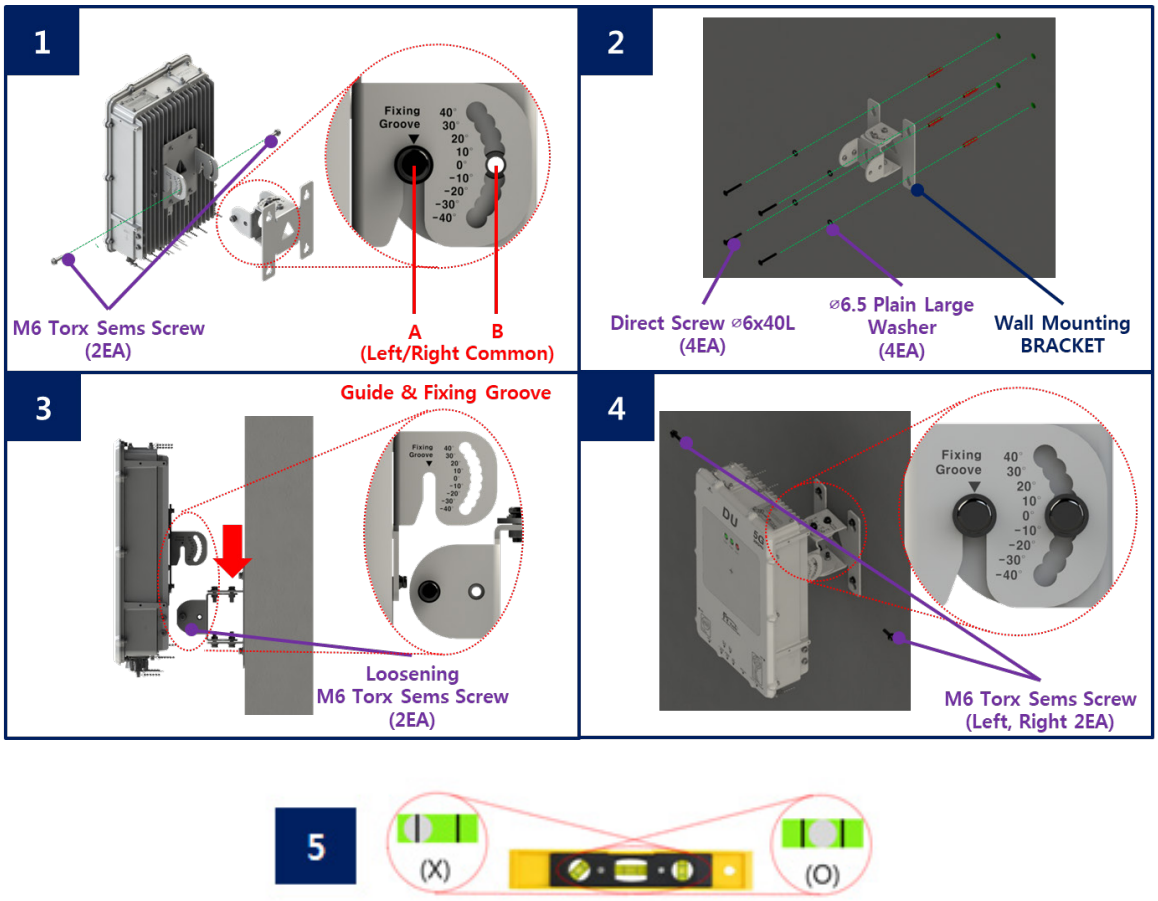

Figure 11. DU Wall Installation Assembly

Above picture is an assembly drawing of the DU wall installation. The Assembly order is shown below.

1. Temporarily remove M6 Torx Sems Screw (2ea) of "B" to separate Wall Mount Bracket from the DU. (Unscrew M6 Torx Sems Screw (2ea) of "A" only enough for the Wall Mount Bracket to be separated)
2. Place the Wall Mount Bracket and the ø6.5 Plain Large Washers(4ea) on the Anchor Bolt and assemble using HEX, Direct Screws(4ea).

3. Place the DU into the slots as shown in the "Guide & Fixing Groove" picture.
4. Reinsert/tighten the M6 Torx Sems Screw (2ea) of "B" and tighten the M6 Torx Sems Screw (2ea) of "A".
5. Verify that the unit is level to ensure that the horizontal/vertical angles are correct.

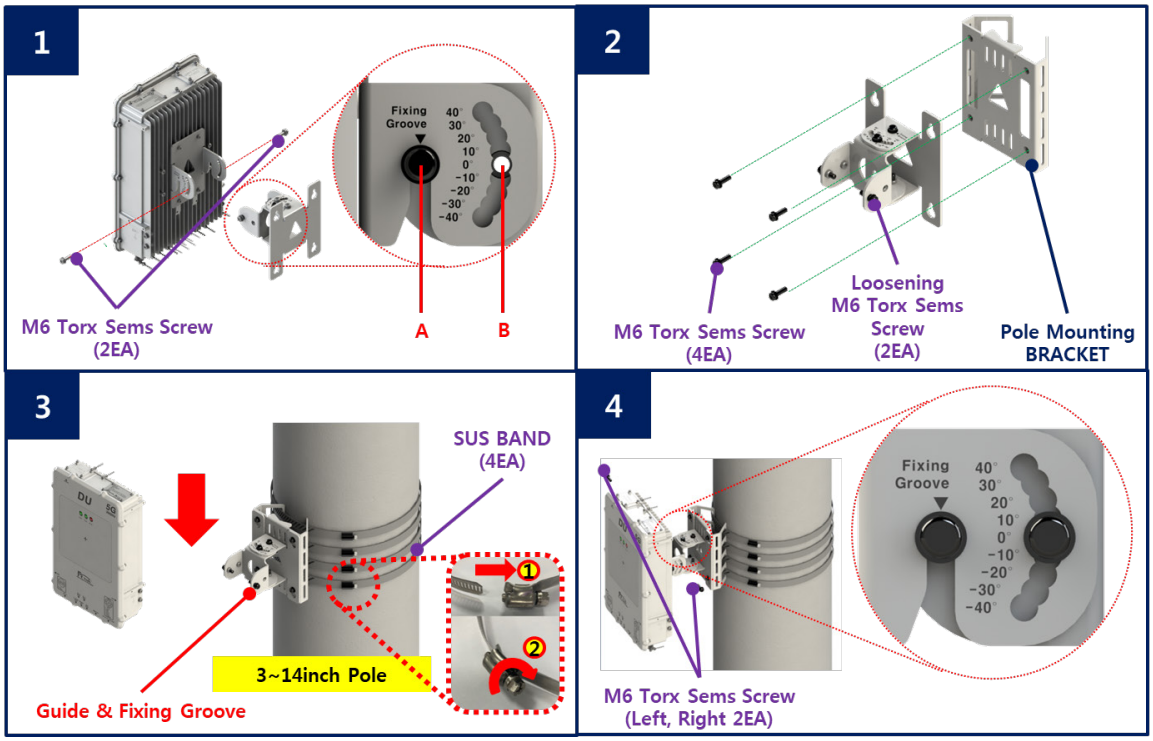

Figure 12. DU Pole Installation Assembly

Above picture is an assembly drawing of the DU pole installation. Assembly order is shown below.

1. Temporarily remove M6 Torx Sems Screw (2ea) of "B" to separate Wall Mount Bracket from the DU. (Unscrew M6 Torx Sems Screw (2ea) of "A" only enough for the Wall Mount Bracket to be separated)
2. Use M6 Torx Sems Screw (4ea) to assemble the Wall Mount Bracket and Pole Mount Bracket.
3. Use a phillips driver to assemble the Bracket and stainless steel pipe clamp Bands (SUS, 4ea not included) on the pole.

Secure the DU into the slots as shown in the "Guide & Fixing Groove" picture. (Will work on poles of 3~14" diameter)

Stainless steel pipe clamp band should be assembled as shown below.

(Verify that the unit is level to ensure that the horizontal/vertical angles are correct.)

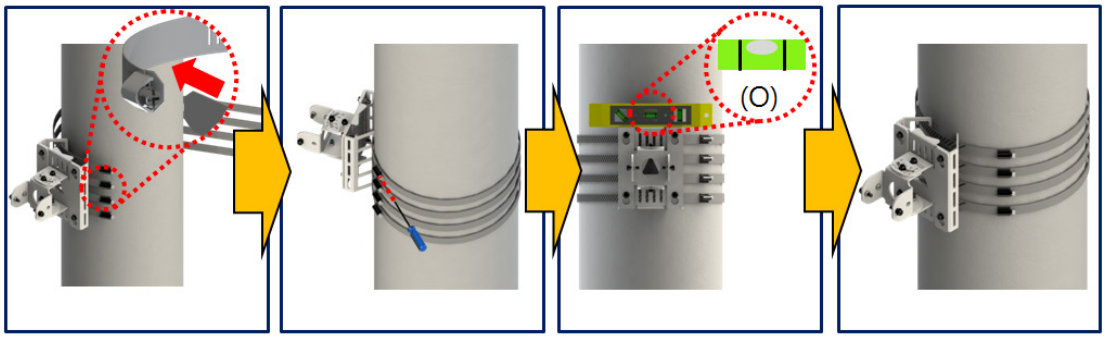

4. Reinsert/tighten the M6 Torx Sems Screw (2ea) of "B" and tighten the M6 Torx Sems Screw (2ea) of "A".

5.2.2 Ground Cable Connection

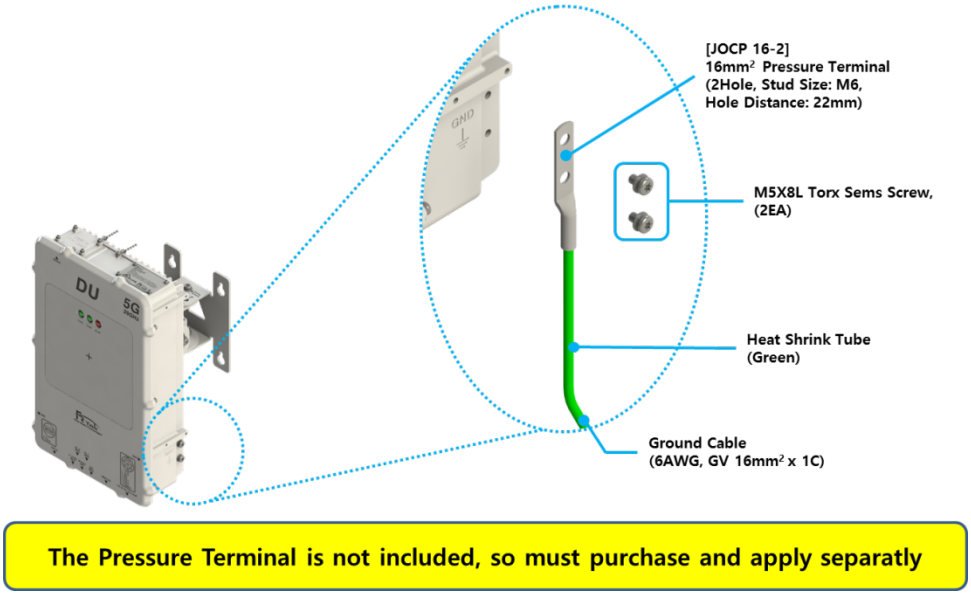

Figure 13. DU Ground Cable Connection

In order to protect the DU, connect enclosure grounding with building grounding in order to prevent DU from electrical danger.

5.2.3 Antenna Tilt

The DU transmits and receives 5G signal from the gNB to provide service in poor coverage areas. Since the DU has an *"Internal Antenna"*, so does not require any additional antenna installation. It can be tilted up/down and left/ right, using the provided mounting bracket.

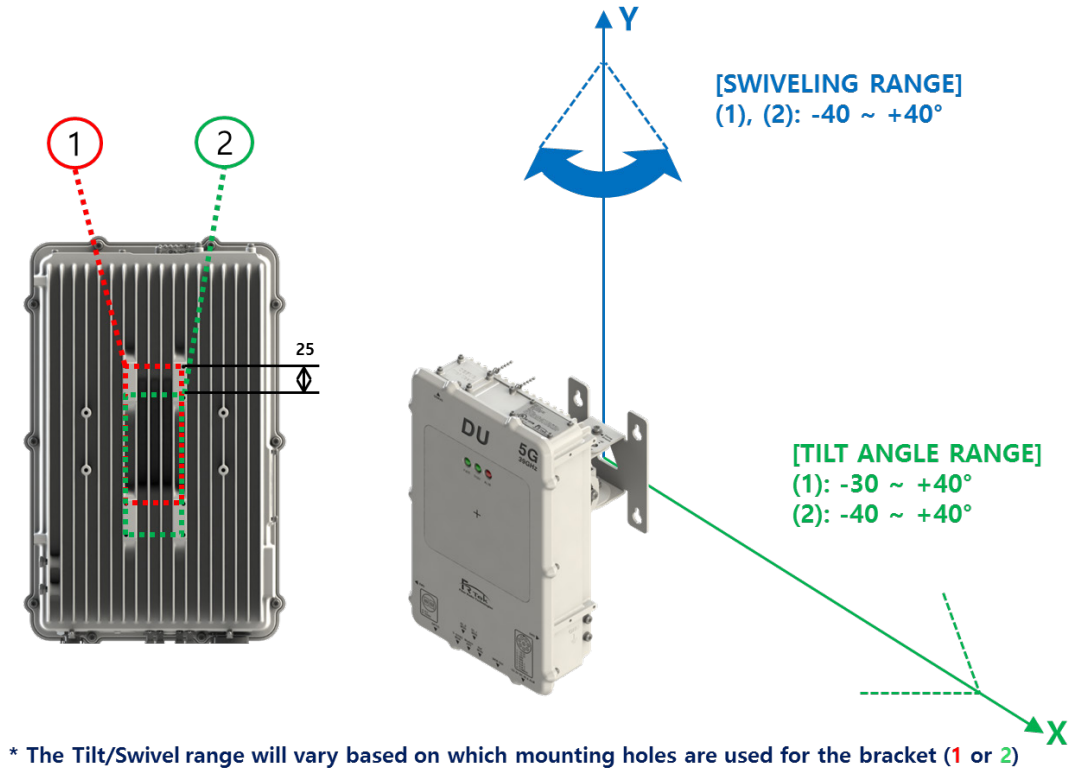

Figure 14. DU Tilt

The above diagram shows the DU rotation angle, up/down/left/right. The DU should be placed and installed (in-building/outdoors) in an optimal location to transmit/receive 5G signal from the gNB and can be tilted as depicted picture.

5.3 SU Installation

5.3.1 Product Installation

The SU can be installed on the wall or pole mounted using brackets/clamps.

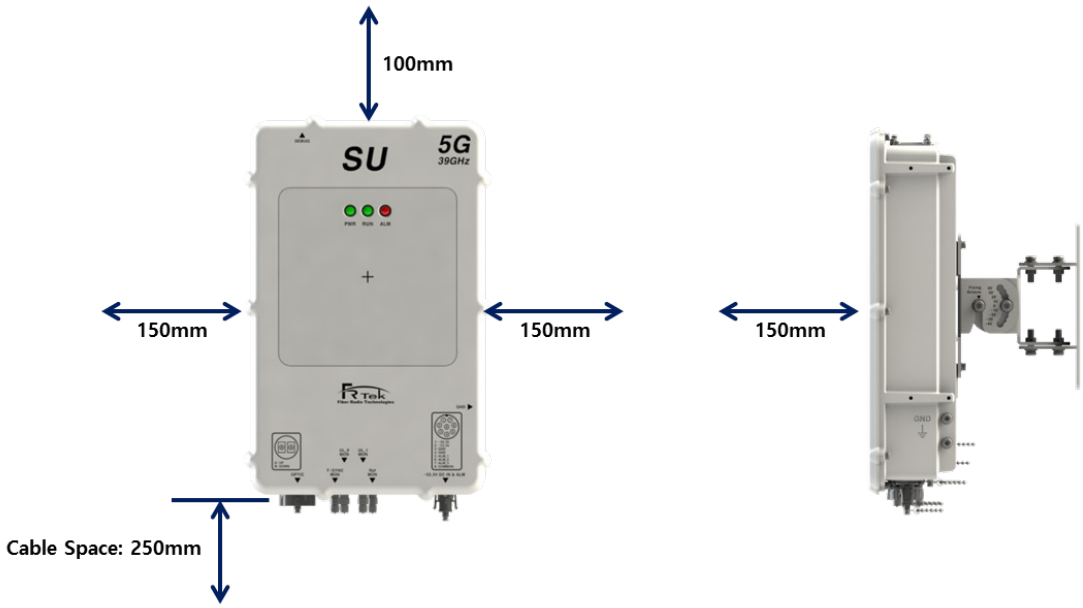

Figure 15. Required Space for SU Installation

The SU mounting bracket allows for tilting vertically and horizontally. It requires a minimum of 3.9"(100mm) space from the top, 5.9"(150mm) space from both sides, and 9.8"(250mm) space from bottom for cables connection. It also requires a minimum of 5.9"(150mm) space from the front side.

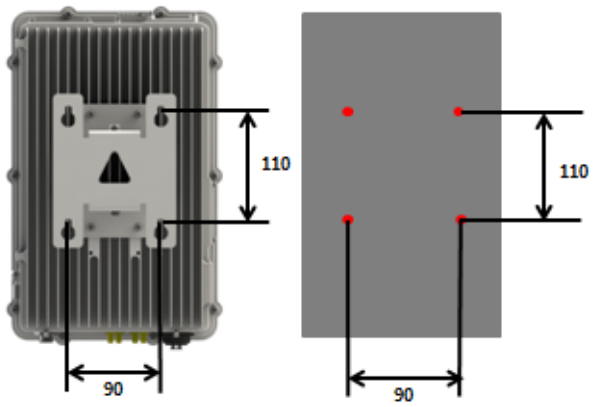

Figure 16. SU Anchor Bolt Assembly

Above picture is a simple drawing for the anchor bolt installation. The Assembly order is shown below.

1. Mark position on the wall. Horizontally 90mm and vertically 110mm.
2. Use hammer drill & concrete 8mm drill bit to drill a hole with a depth of 40mm or more on the marked positions.

3. Remove dust from the holes.
4. Use rubber hammer to insert anchors into the holes drilled on the wall.

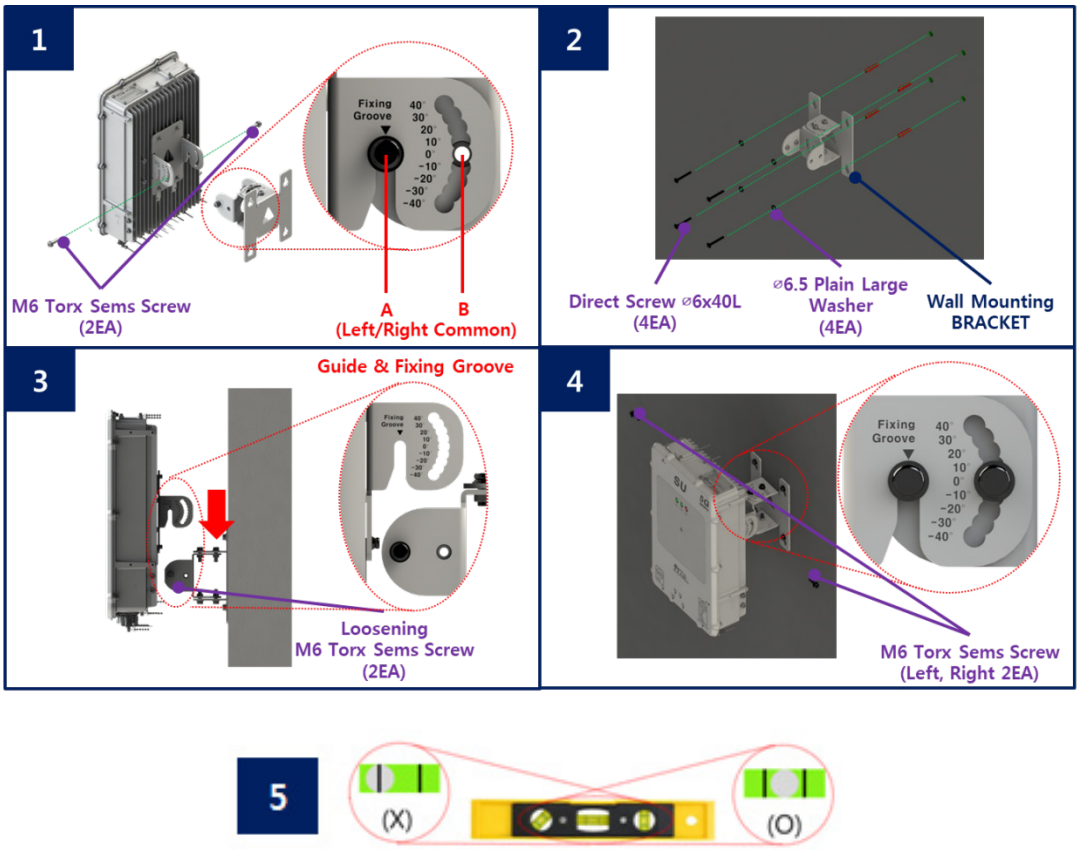

Figure 17. SU Wall Installation Assembly

Above picture is an assembly drawing of the SU wall installation. The Assembly order is shown below.

1. Temporarily remove M6 Torx Sems Screw (2ea) of "B" to separate Wall Mount Bracket from the DU. (Unscrew M6 Torx Sems Screw (2ea) of "A" only enough for the Wall Mount Bracket to be separated)
2. Place the Wall Mount Bracket and the ø6.5 Plain Large Washers(4ea) on the Anchor Bolt and assemble using HEX, Direct Screws(4ea).
3. Place the SU into the slots as shown in the "Guide & Fixing Groove" picture.
4. Reinsert/tighten the M6 Torx Sems Screw (2ea) of "B" and tighten the M6 Torx Sems Screw (2ea) of "A".
5. Verify that the unit is level to ensure that the horizontal/vertical angles are correct.

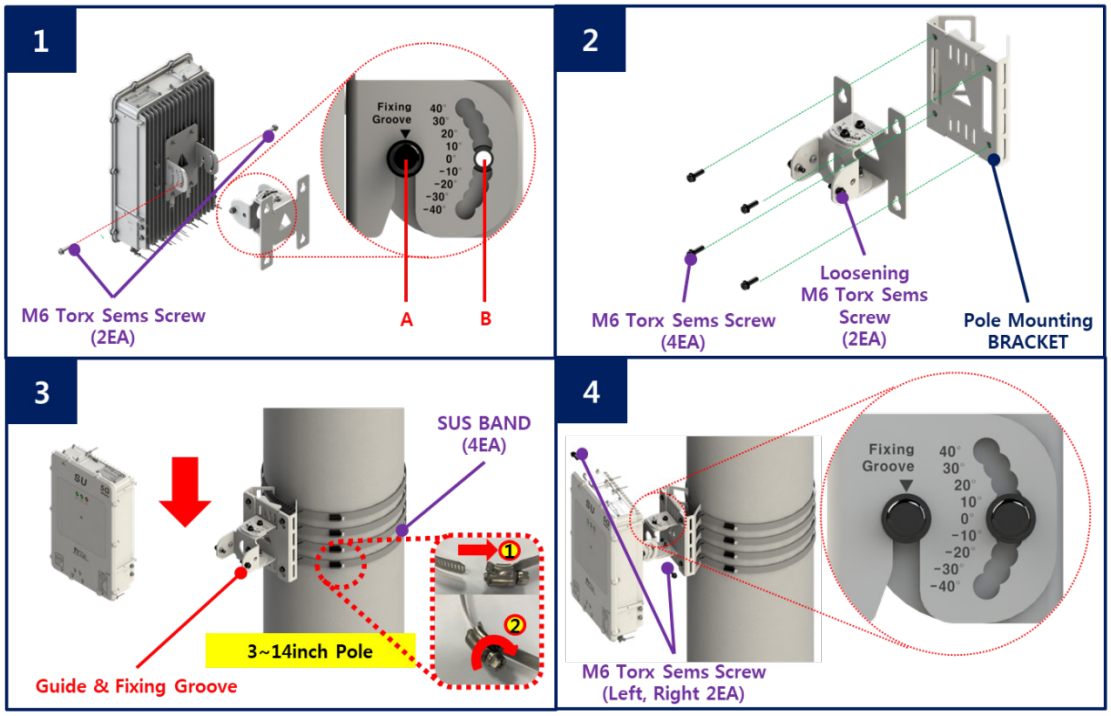

Figure 18. SU Pole Installation Assembly

Above picture is an assembly drawing of the SU pole installation. Assembly order is shown below.

1. Temporarily remove M6 Torx Sems Screw (2ea) of "B" to separate Wall Mount Bracket from the DU. (Unscrew M6 Torx Sems Screw (2ea) of "A" only enough for the Wall Mount Bracket to be separated)
2. Use M6 Torx Sems Screw (4ea) to assemble the Wall Mount Bracket and Pole Mount Bracket.
3. Use a phillips driver to assemble the Bracket and stainless steel pipe clamp band (SUS, 4ea not included) on the pole.

Secure the SU into the slots as shown in the "Guide & Fixing Groove" picture. (Will work on poles of 3~14")

Stainless steel pipe clamp bands should be assembled as shown below.

(Verify that the unit is level to ensure that the horizontal/vertical angles are correct)

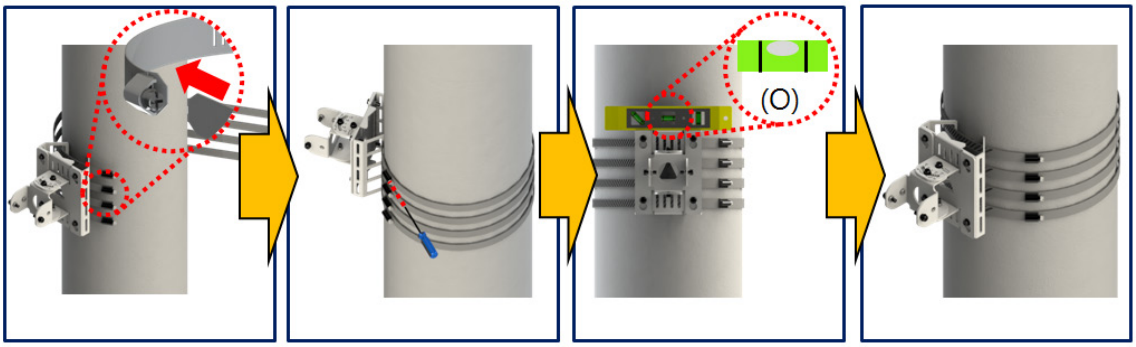

4. Reinsert/tighten the M6 Torx Sems Screw (2ea) of "B" and tighten the M6 Torx Sems Screw (2ea) of "A".

5.3.2 Ground Cable Connection

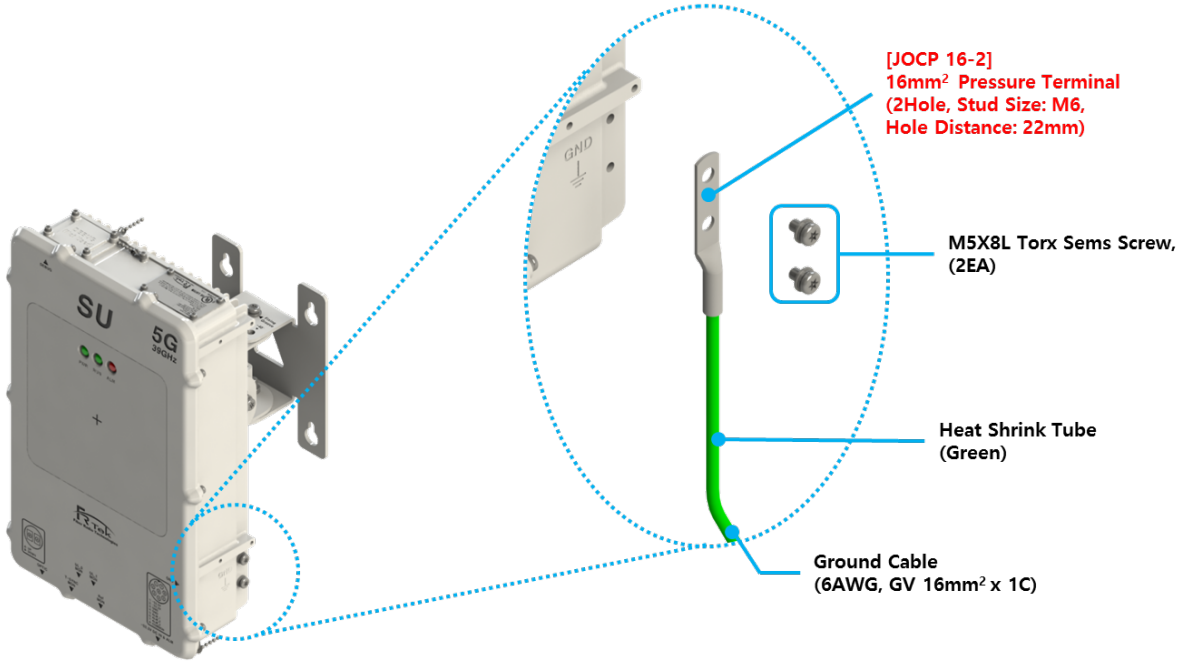

The Pressure Terminal is not included, so must purchase and apply separately

Figure 19. SU Ground Cable Connection

In order to protect the SU, connect enclosure grounding with building grounding in order to prevent SU from electrical danger.

5.3.3 Antenna Tilt

The SU provides coverage to areas where the gNB has inadequate service. Since the SU has an "*Internal Antenna*", it does not require additional antenna installation. It can be rotated and tilted up, down, left, and right using the provided mounting bracket.

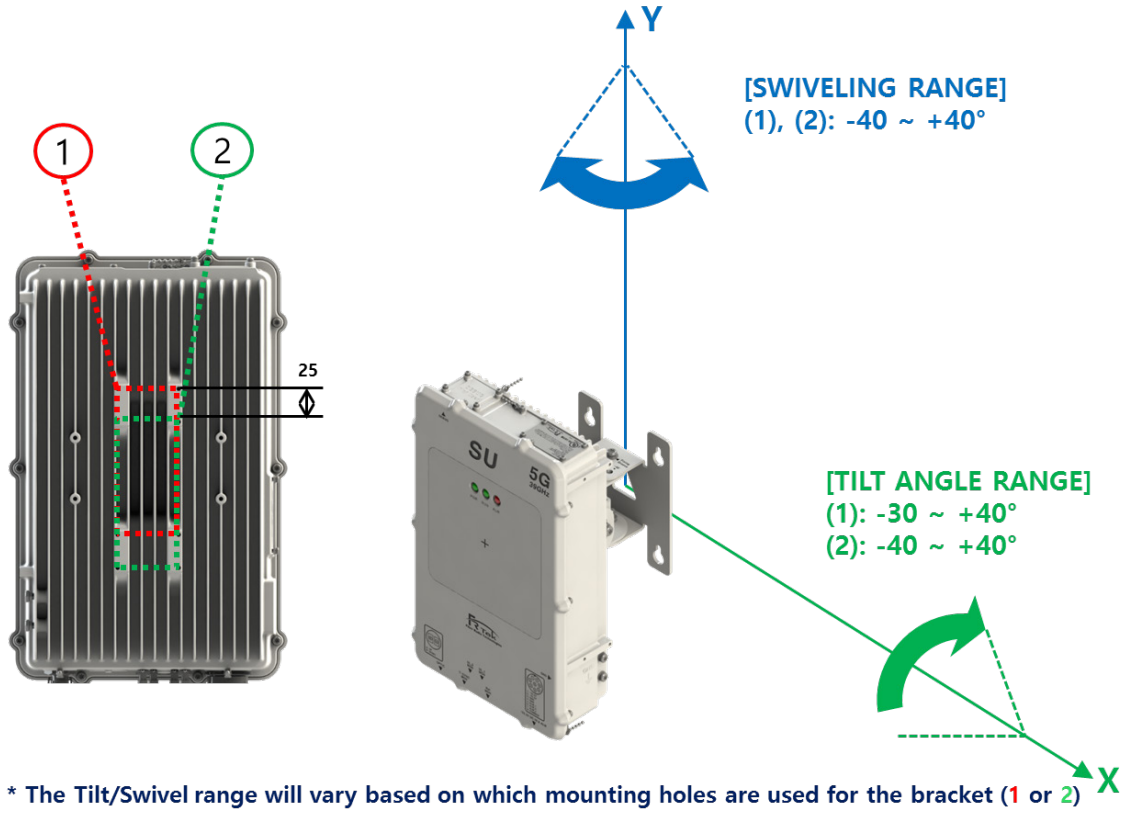

Figure 20. SU Tilt

The above diagram shows the SU rotation angle, up/down/left/right. The SU should be placed and installed (in-building/outdoors) in an optimal location to transmit/receive 5G signal from the gNB and can be tilted as depicted picture.

5.4 Rectifier Installation

5.4.1 Product Installation

The Rectifier can be installed on the wall or pole mounted using brackets/clamps.

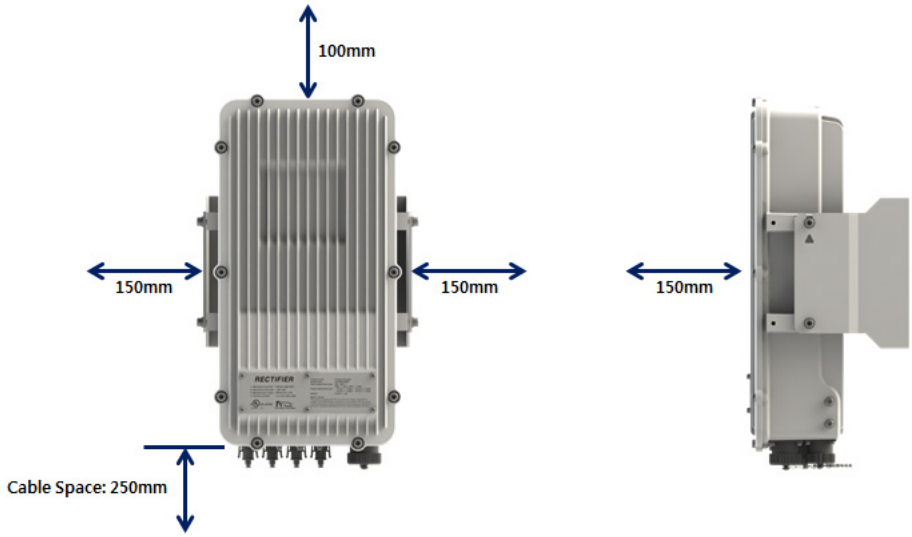

Figure 21. Required Space for Rectifier Installation

For ease of installation, the Rectifier requires more than 5.91 inch (150mm) space in front, above, right and left of the equipment and 9.84 inch (250mm) clearance below the equipment for cable connections.

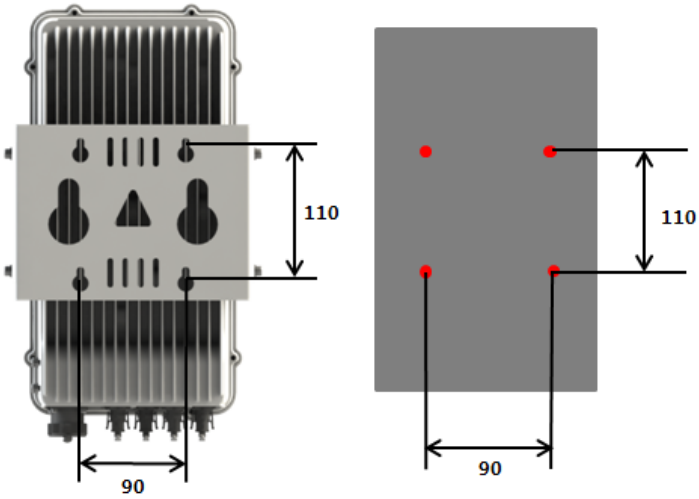

Figure 22. Rectifier Anchor Bolt Assembly

Above picture is a simple drawing for the anchor bolt installation. The Assembly order is shown below.

1. Mark position on the wall. Horizontally 90mm and vertically 110mm.
2. Use hammer drill & concrete 8mm drill bit to drill a hole with a depth of 40mm or more on the marked positions.
3. Clear all obstructions in the holes.
4. Use a Rubber Hammer to insert anchors into the drilled holes on the wall.

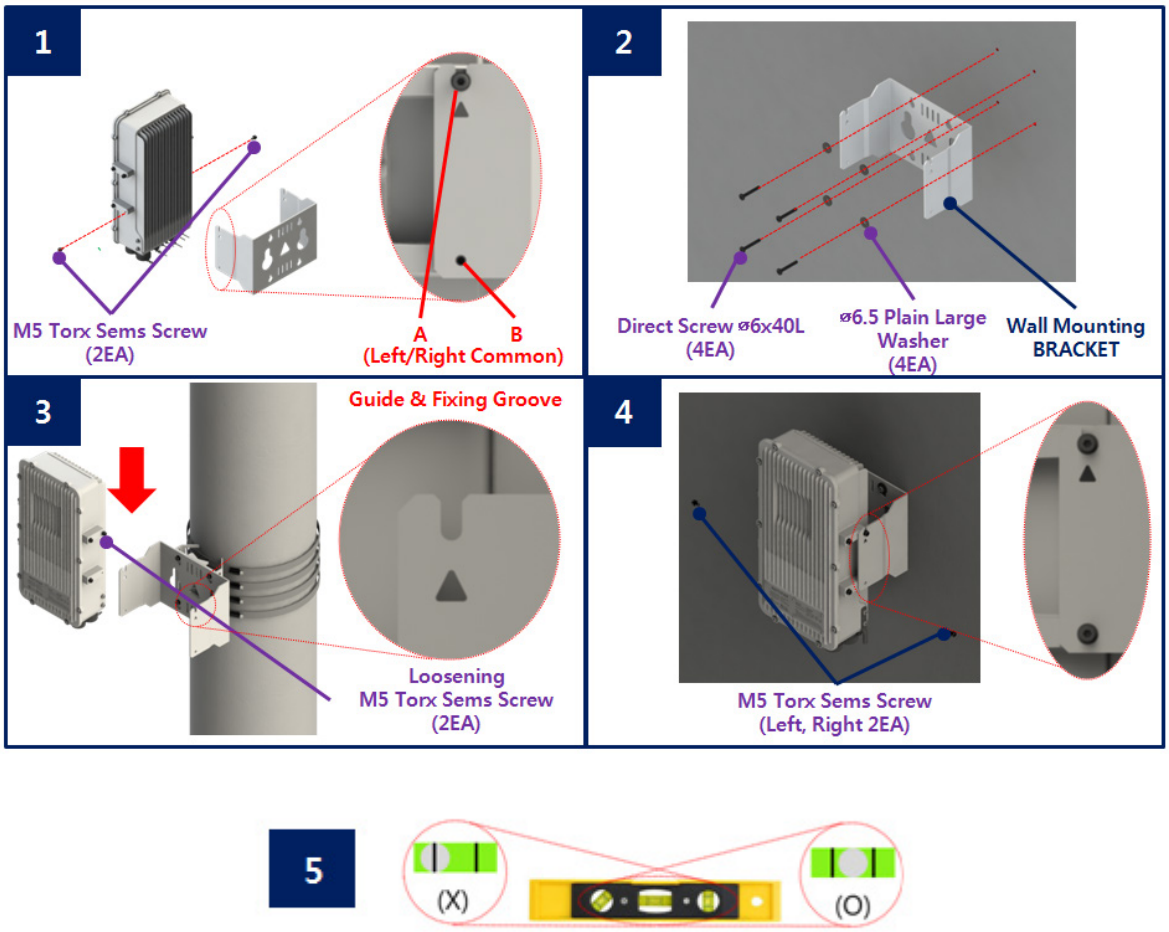

Figure 23. Rectifier Wall Installation Assembly

Above picture is an assembly drawing of the Rectifier wall installation.

Assembly order is as shown below.

1. Temporarily remove M5 Torx Sems Screw (2ea) of "B" to separate Wall Mount Bracket from the Rectifier.
   (Unscrew M5 Torx Sems Screw (2ea) of "A" only enough for the Wall Mount Bracket to be separated)
2. Place the Wall Mount Bracket and the ø6.5 Plain Large Washers(4ea) on the Anchor Bolt and assemble using HEX, Direct Screws(4ea).
3. Mount the Rectifier according to the "Guide & Fixing Groove" picture.
4. Reinsert/tighten the M5 Torx Sems Screw (2ea) of "B" and tighten the M5 Torx Sems Screw (2ea) of "A".
5. Check that the unit is level to ensure the horizontal/vertical angles are correct.

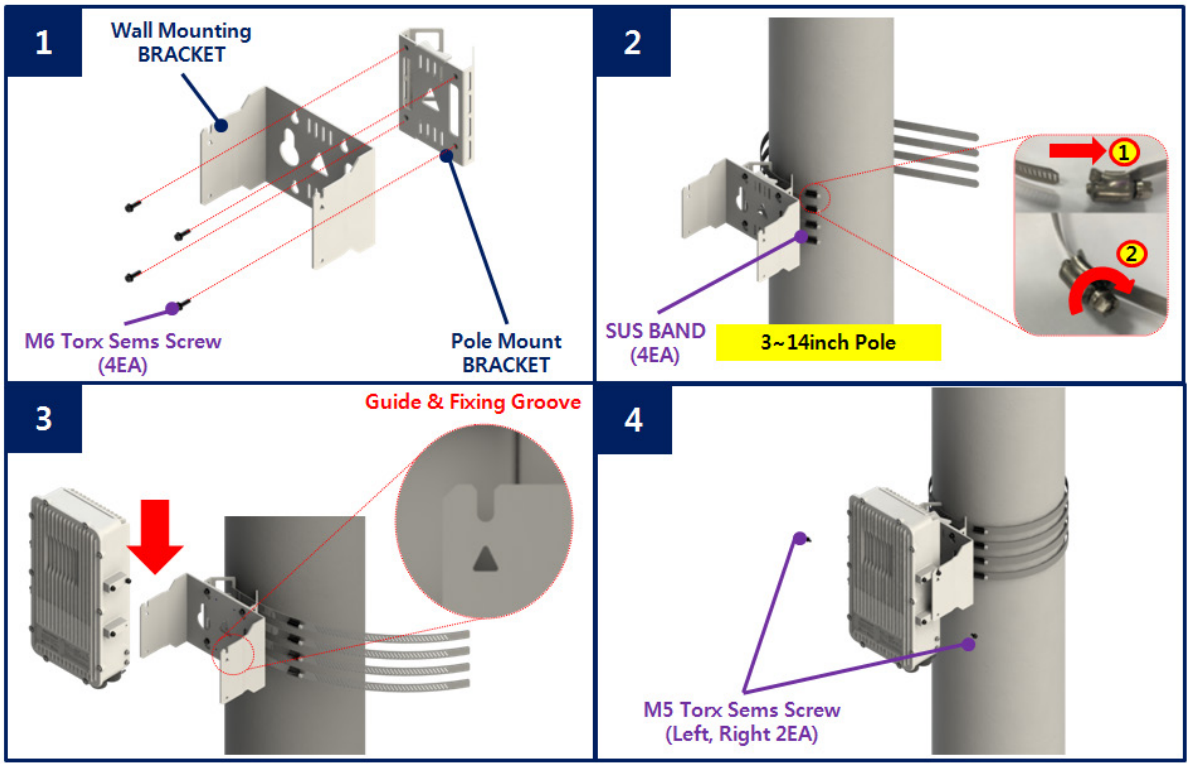

Figure 24. Rectifier Pole Installation Assembly

Above picture is an assembly drawing of the Rectifier pole installation. Assembly order is shown below.

1. Separate the Wall Mount Bracket from the Rectifier and assemble to Pole Mount Bracket using M6 Torx Sems Screw (4ea)
2. Use Phillips driver to assemble the Bracket and Stainless Steel Pipe Clamp Bands (SUS, 4ea not included) on the pole.

The bands should be attached as shown in the diagram above.

(Confirm that the unit is level to ensure that the horizontal/vertical angles are correct.)

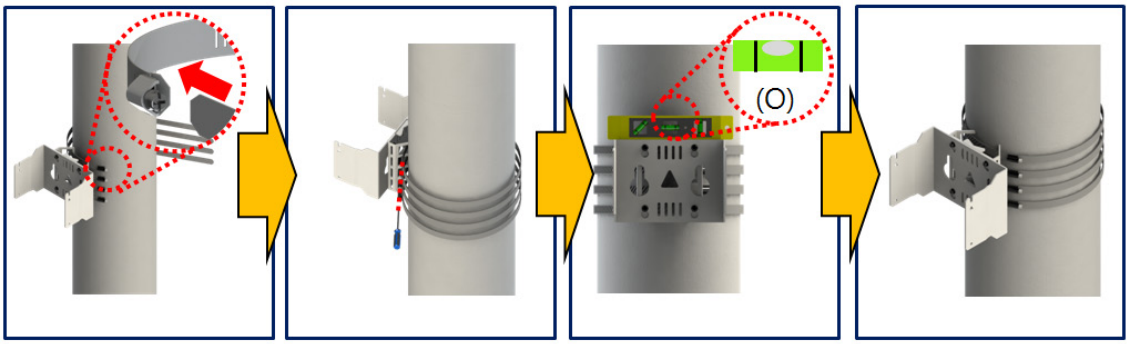

3. Secure the Rectifier into the slots as shown in the "Guide & Fixing Groove" picture. (Will work on poles of 3~14" diameter)
4. Insert/tighten the M5 Torx Sems Screw (2ea)

5.4.2 Ground Cable Connection

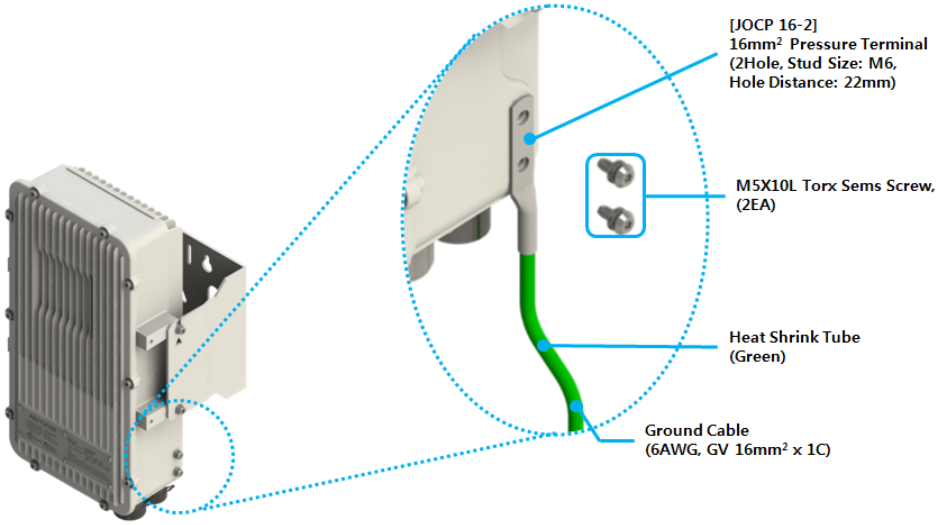

The Pressure Terminal is not included, so must purchase and apply separately

Figure 25. Rectifier Ground Cable Connection

In order to protect the Rectifier, connect enclosure grounding with building grounding in order to prevent Rectifier from electrical danger.

5.5 DU/SU/Rectifier Connection

5.5.1 DU/SU/Rectifier Connection

The DU and SU are connected with a Fiber-Optic cable. The Rectifier is connected with the DU and SU with a power cable. Each cable connection method is as below.

For the DU, do not plug fiber into PORT A

For the SU_E, do not plug fiber into PORT B

Through the entire circuit, the B goes to A, and the A goes to B

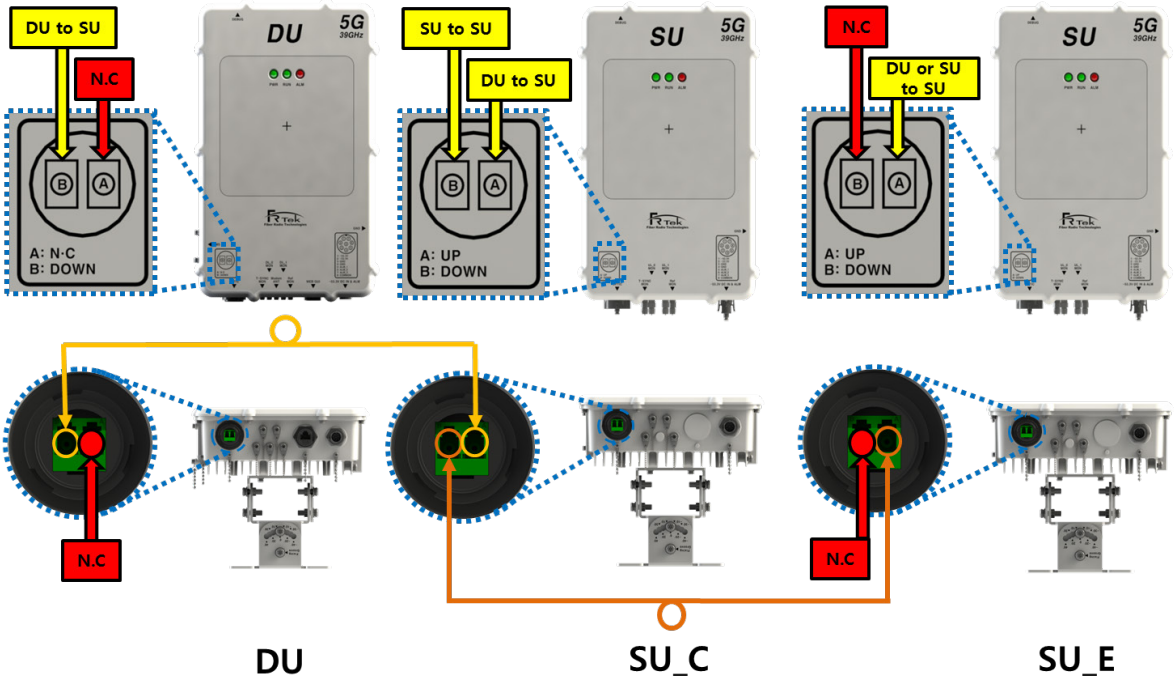

Figure 26.Optic Cable Connection

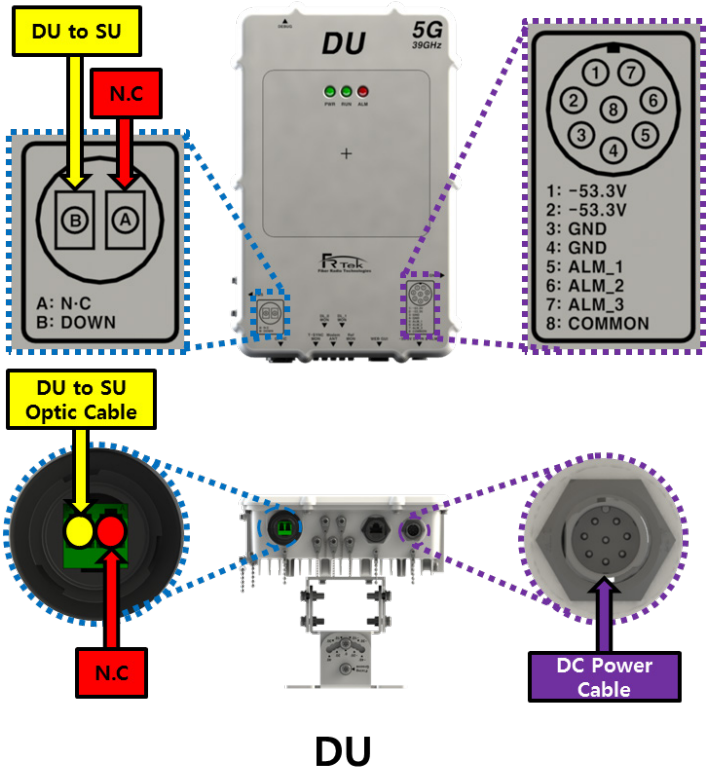

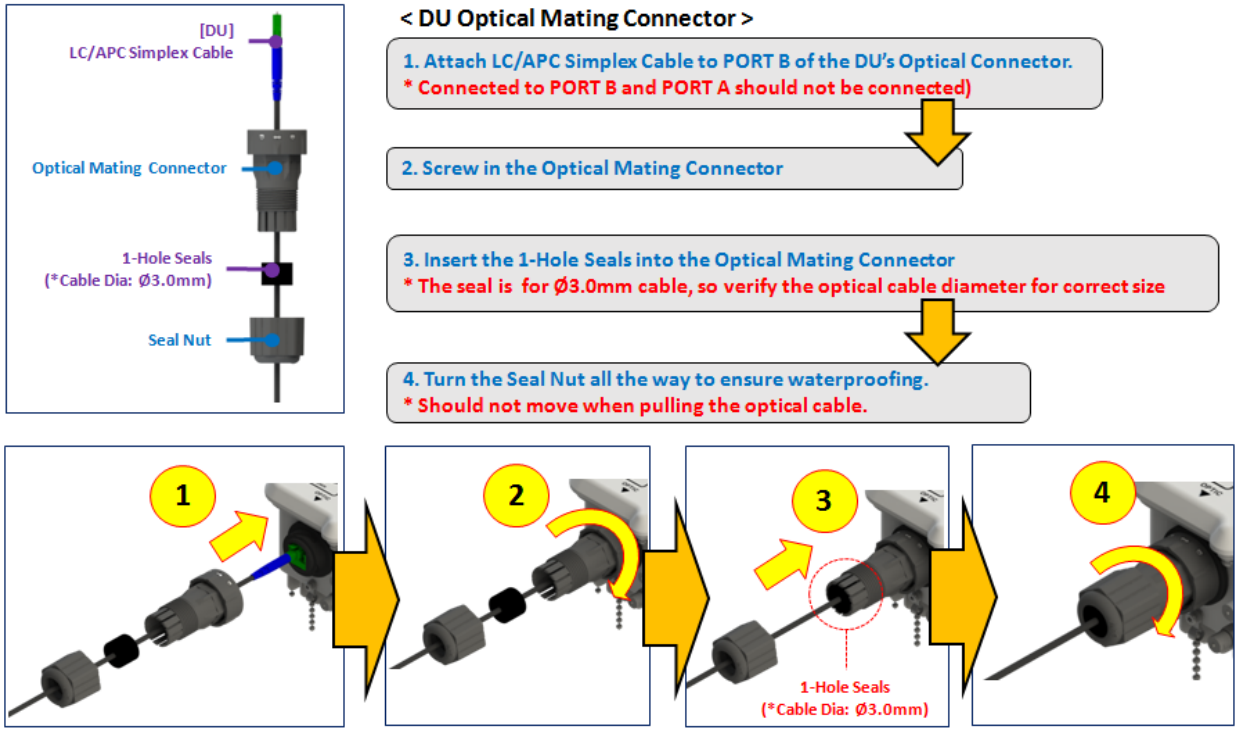

Figure 27.DU Optical Cable Connection

Since the DU can be placed either in-building or outdoors, waterproof connectors must be used.

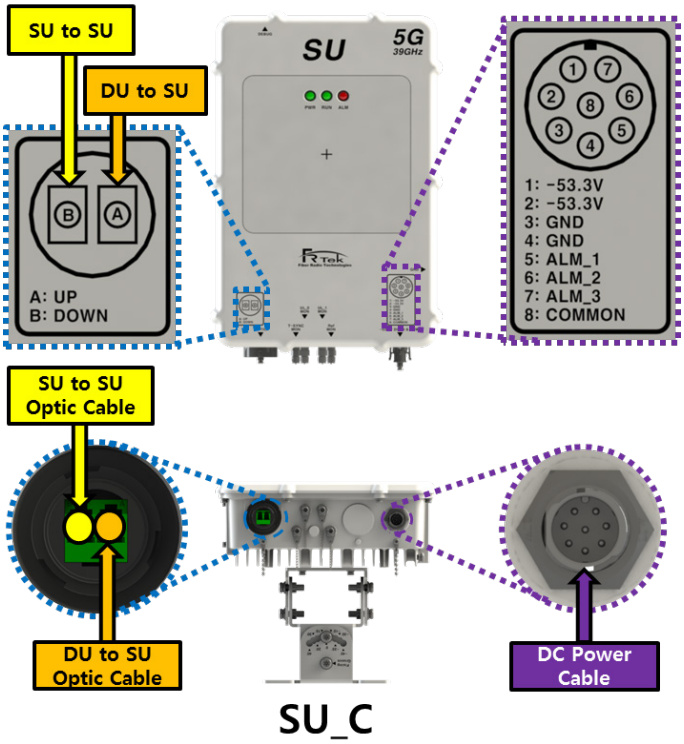

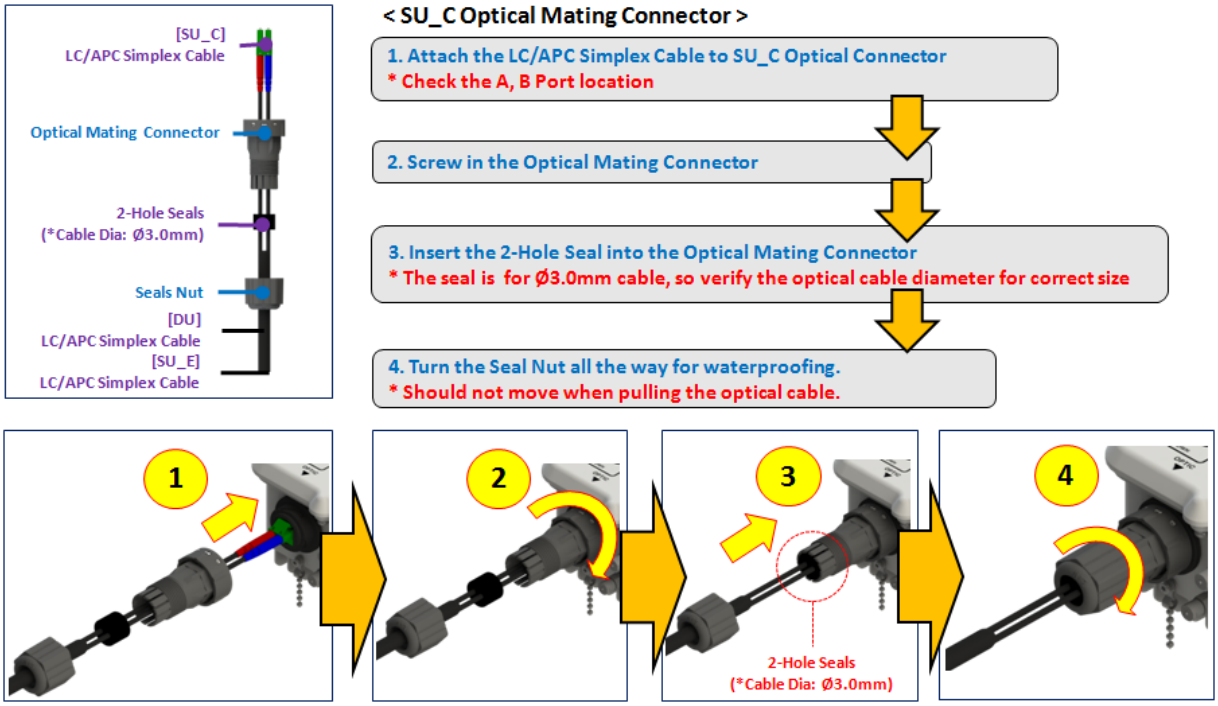

Figure 28.SU_C Optical Cable Connection

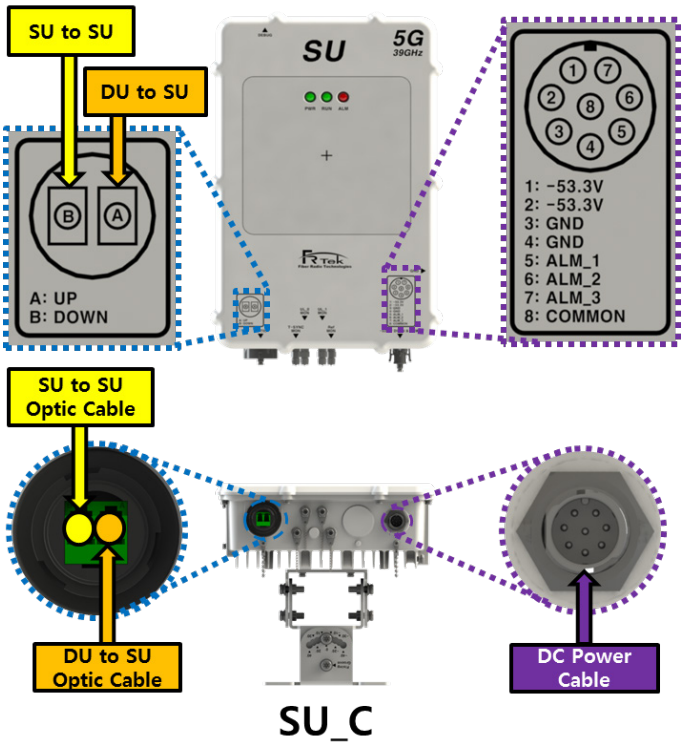

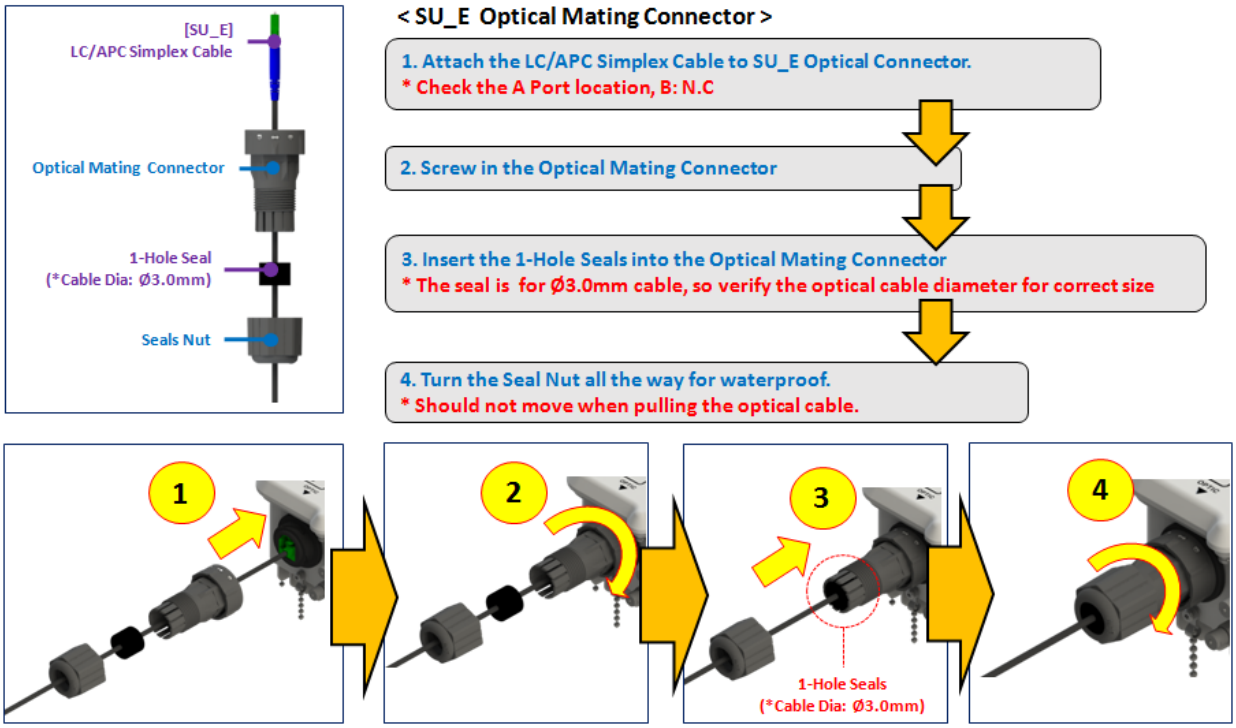

Figure 29.SU_E Optical Cable Connection

Since the SU can be placed either in-building or outdoors, waterproof connectors must be used.

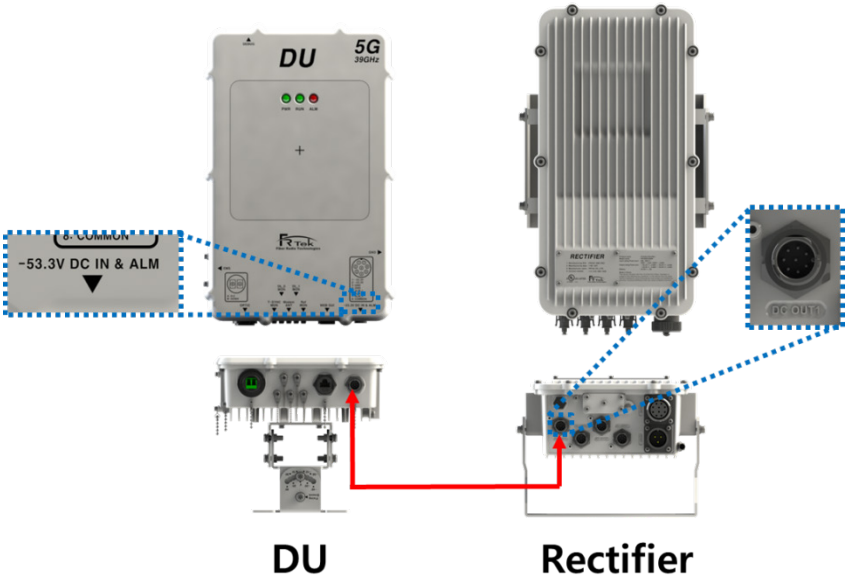

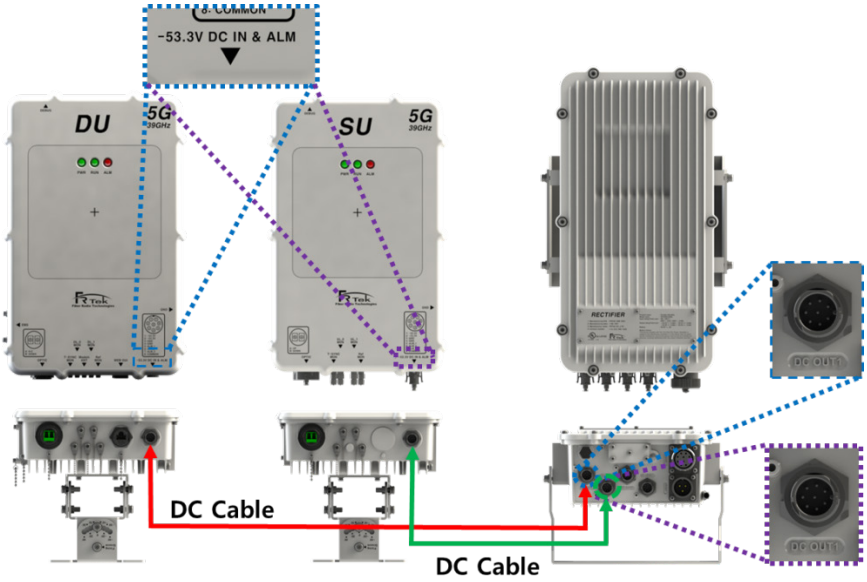

[1DU - 1SU - 1Rectifier]

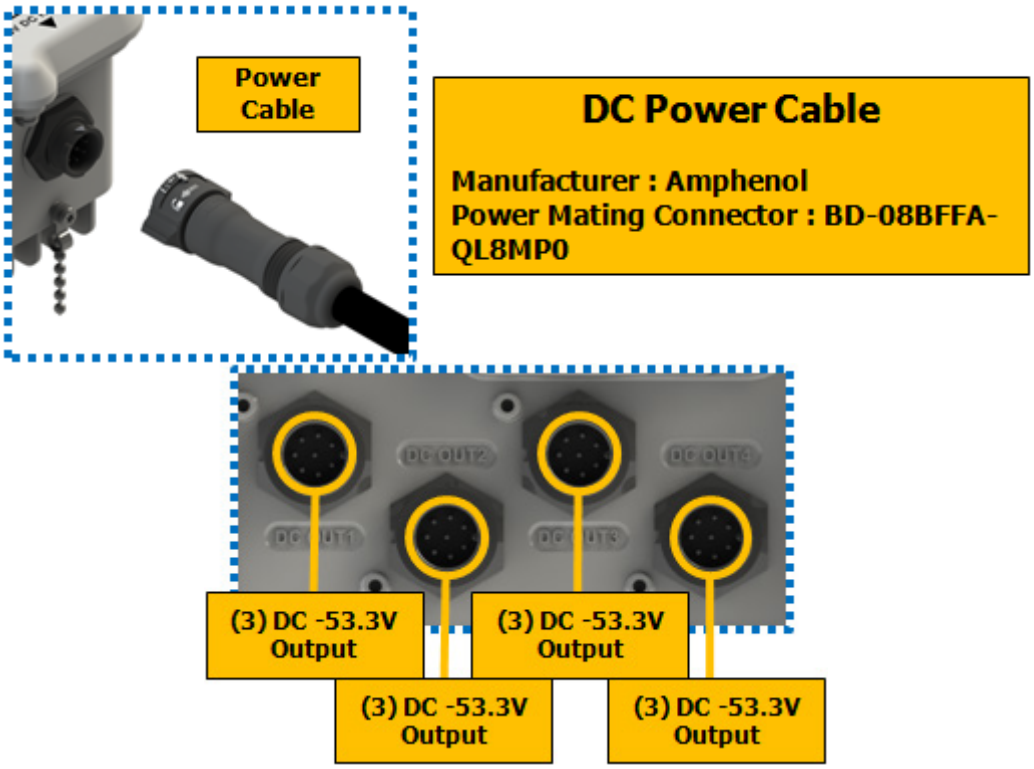

Figure 30.DU/SU Cable Connections from Rectifier

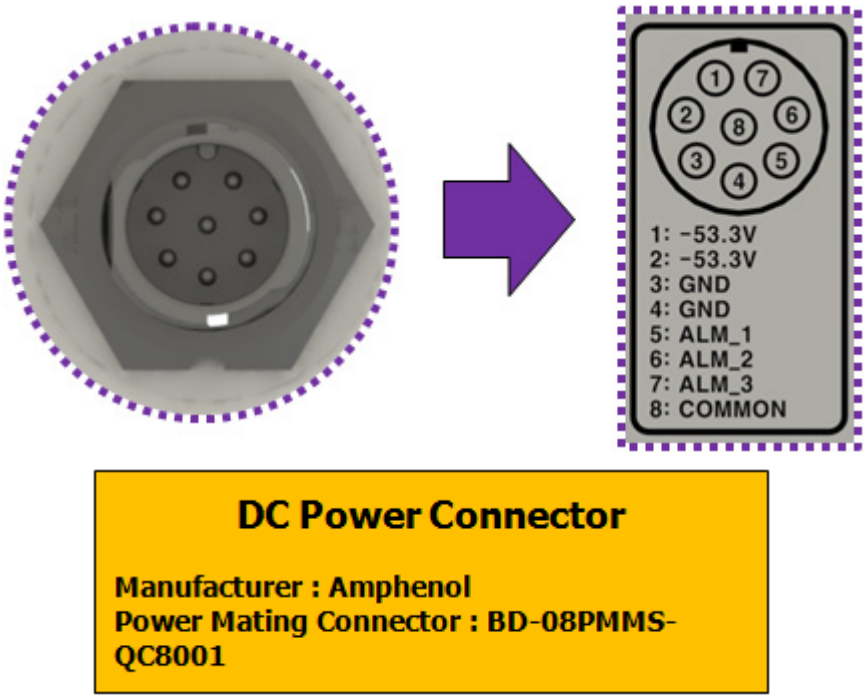

Figure 31.DU & SU Input Port Pinout

No	Content
①	DC -53.3V (-48V ~ -53.3V)
②	DC -53.3V (-48V ~ -53.3V)
③	Ground
④	Ground
⑤	Battery DC Alarm
⑥	Battery AC or Temp Alarm
⑦	Battery BAT Alarm
⑧	Battery Common

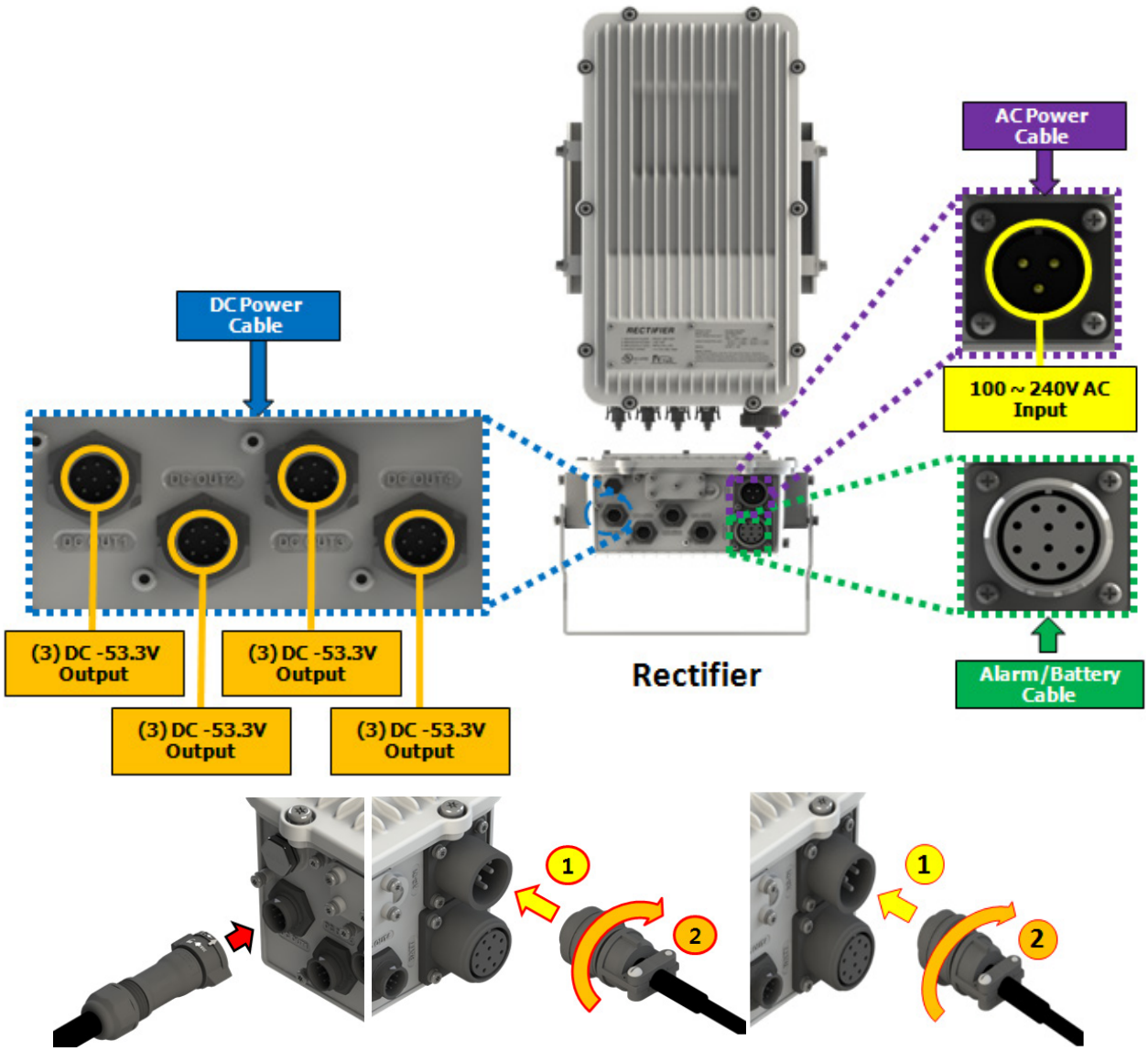

Figure 32.Rectifier DC & AC Cable Connections

Connect the AC input power cable to the Rectifier AC-IN port, and connect the DU, SU (Cascade), SU (End) cable for DC input to the Rectifier DC OUT port 1~4.

Since the Rectifier is an outdoor unit, waterproof connectors must be used.

* Rectifier AC power cable connector : MS3102A-16-10P

* DC power cable connector : BD-08BFFA-QL8MP0

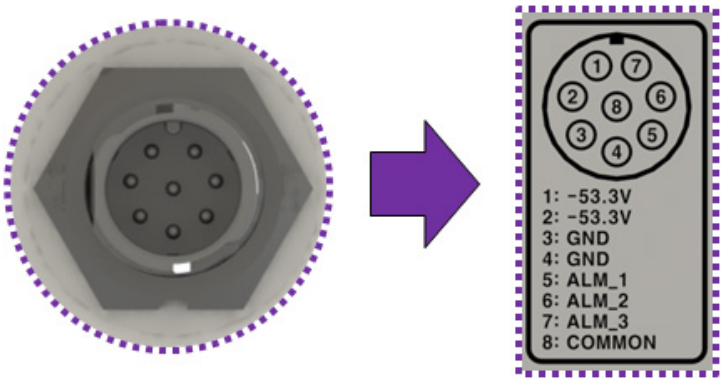

DC Power Connector

Manufacturer : Amphenol
Power Mating Connector : BD-08PMMS-QC8001

Figure 33.Rectifier DC Output Port Pinout

No	Content
①	DC -53.3V (-48V ~ -53.3V)
②	DC -53.3V (-48V ~ -53.3V)
③	Ground
④	Ground
⑤	Battery DC Alarm
⑥	Battery AC or Temp Alarm
⑦	Battery BAT Alarm
⑧	Battery Common

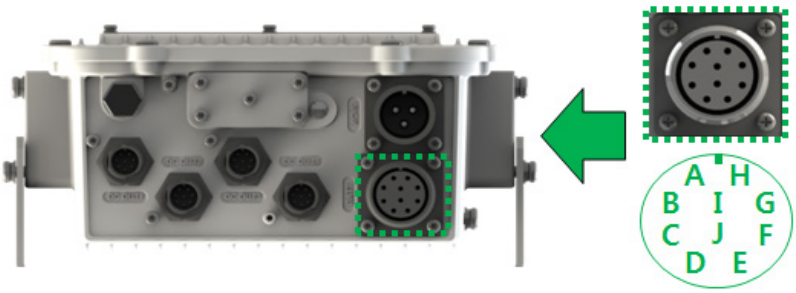

Battery Connector

Manufacturer : YONGJIN ELECOMM
Power Mating Connector : YJ3102C 18-1S

Figure 34.Rectifier Battery Port Pinout

No	Content
A	Batt+
B	Batt+
C	Batt+
D	Contact Comm
E	Battery Alarm_1
F	Batt-
G	Batt-
H	Batt-
I	Battery Alarm_2
J	Battery Alarm_3

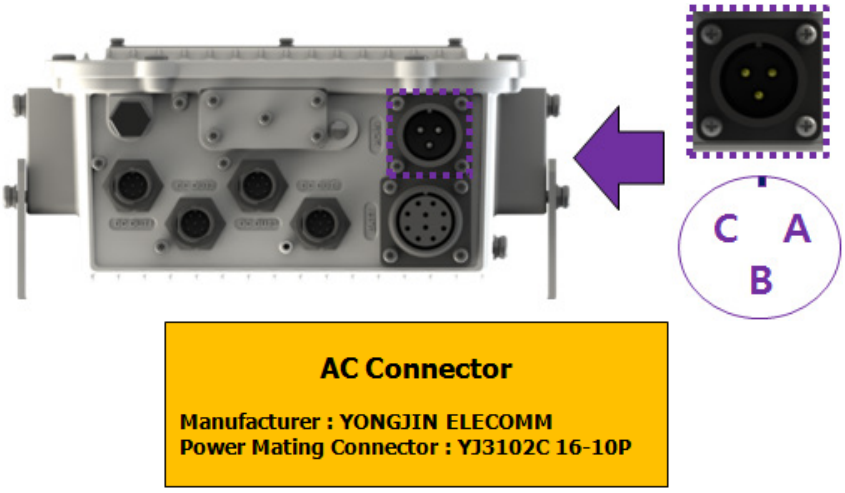

Figure 35.Rectifier AC Port Pinout

No	Content
A	Live
B	FG
C	Neutral

5.5.2 Other Installation Scenarios

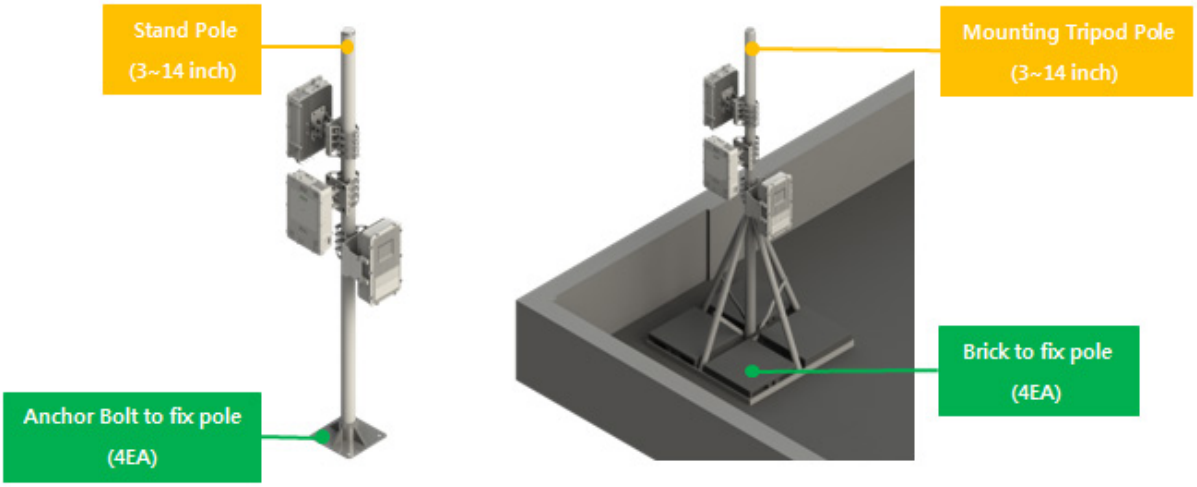

Figure 36. Standing Pole or Mounting Tripod Pole

When Wall or Electrical Pole installation is not available for the DU, SU, and Rectifier, then can use a Standing Pole or Mounting Tripod Pole for installation. The poles must be at least 3" in diameter.

Chapter 6

Local GUI(Graphical User Interface)

6.1 GUI Configuration

Local GUI(Graphical User Interface)

"Chapter 3 is used to provide information on product setting and product information to users operating 39GHz 5G Wireless Optical DAS, and the repeater administrator who will use the operation manual has specialized knowledge of the relay system and Experience in construction and operation is required.

- GUI program is an operating program designed to control and monitor the system.
- The GUI program communicates using the USB-B type port configured in the CPU of each device.
- Through the main screen of each unit, the user can monitor and control the operation status of the entire system.

6.1 GUI Configuration

6.1.1 Initial Main Screen

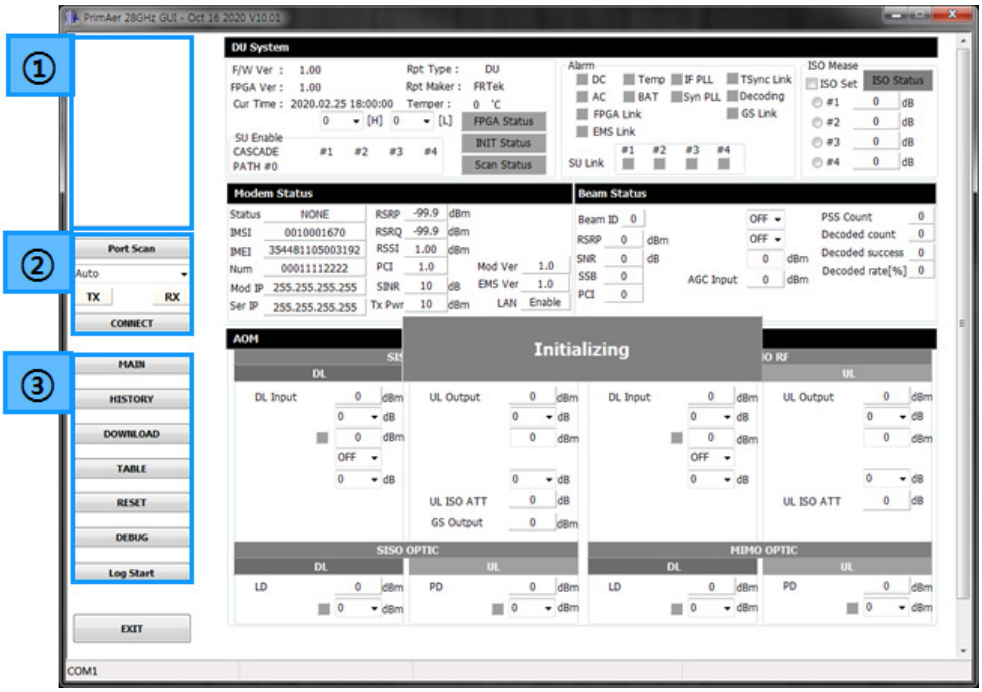

Figure 37. Initial GUI Main Screen.

① Tree List

In this item, you can check all equipment of the currently configured system. In addition, it is possible to monitor whether an alarm has occurred in each unit in real time through the alarm of each unit item.

② GUI Connection

In this item, Unit and PC can be connected. After clicking'Auto', select the comport where the unit and PC are connected, and click CONNECT to connect to the GUI.

③ Function List

In this item, additional functions implemented in Local GUI can be used. Alarm History function, firmware download function, table creation/management function, CPU RESET function, Debug function, and Log function can be used.

- HISTORY : This is the item that can check the Alarm History of each unit.
- DOWNLOAD : is an item that can download the firmware of each unit.
- TABLE : It is an item that can create/manage a table organized by each unit.
- RESET : This item can reset the CPU board of each unit.
- DEBUG : CPU and Array Ant for each unit. It is an item that can check debug messages between modules in real time.
- Log Start : It is an item that can record time log of important items configured in each unit's GUI through Excel.

④ DU System

This item is the item that can check the system information and alarm of DU, and the items of information that can be checked are as follows.- F/W Ver : MCU Firmware Version

- FPGA Ver : FPGA Firmware Version
- Cur Time : Current Time

- Rpt Type : Repeater Type
- Rpt Maker : Repeater Maker
- Cur Temper : Current Temperature
- Temperature H : Temperature Upper Setting
- Temperature L : Temperature Lower Setting
- SU Enable : This item sets the cascade connection between DU and SU and between SU and SU.
- SU Link : This item can check the cascade connection status between DU and SU and between SU and SU.
- DL/UL Test : This item can check the cascade connection status between DU and SU and between SU and SU.
- FPGA Status : This item can check internal FPGA booting and connection status when DU is ON.
- INT Status : Initialize Status, This item can check MCU booting and connection status when DU is ON.
- DC Alarm : This is an alarm item to monitor the status of -53.5V of DC input power of DU.
- Temp Alarm : DU internal temperature
- TSYNC Link Alarm : This is an alarm item to monitor the TDD SYNC signal extraction status from an external base station signal.
- AC Alarm : This is an alarm item to monitor the status of 100 ~ 240V of AC input power of the rectifier.
- BAT Alarm : This is an alarm item to monitor the normal operation of the battery.

⑤ MVBX Status

This item can monitor base station information SSP, SNR, and RSRP in real time.

⑥ AOM

This item is the'LD' alarm and'LD' alarm that can monitor the transmit/receive strength and status of the RF part of the Analog Optic Module inside the DU and the DL/UL real-time RF output of the SISO Path/MIMO Path of the Optic part, and the converted analog optical signal. PD' alarm is configured, and ATT control, ALC Limit Level setting, ALC On/Off, Shutdown Level setting, and Shutdown On/Off can be set.

- DL Output: This item monitors the DL output of AOM SISO RF and AOM MIMO RF in real time.

- DL ATT: This item controls DL Atten of AOM SISO RF and AOM MIMO RF.

- ALC Limit Level: This item sets the Auto Limit Control limit level of AOM SISO RF DL/UL and AOM MIMO RF DL/UL.

- ALC On/Off: This item controls On/Off of Auto Limit Control function of AOM SISO RF DL/UL and AOM MIMO RF DL/UL.

- UL Output: This item monitors the UL output of AOM SISO RF and AOM MIMO RF in real time.

- UL ATT: This item controls UL Atten of AOM SISO RF and AOM MIMO RF.

- SD Level: This item sets the shutdown level of AOM SISO RF UL and AOM MIMO RF UL and displays the alarm.

- SD On/Off: This item controls On/Off of Shutdown operation of AOM SISO RF UL and AOM MIMO RF UL.

- UL ISO ATT: This item controls Isolation Atten of AOM SISO RF UL, AOM MIMO RF UL.

- LD: It is an item to monitor LD Power of AOM SISO OPTIC DL and AOM MIMO DL in real time.

- LD Lower: This item sets the lower limit value of LD Power of AOM SISO OPTIC DL, AOM MIMO DL, and displays Alarm.

- PD: This item monitors the LD Power of AOM SISO OPTIC UL and AOM MIMO UL in real time.

- PD Lower: This item sets the lower limit value of PD Power of AOM SISO OPTIC UL, AOM MIMO UL and displays Alarm.

6.1.2 DU Main Screen Configuration

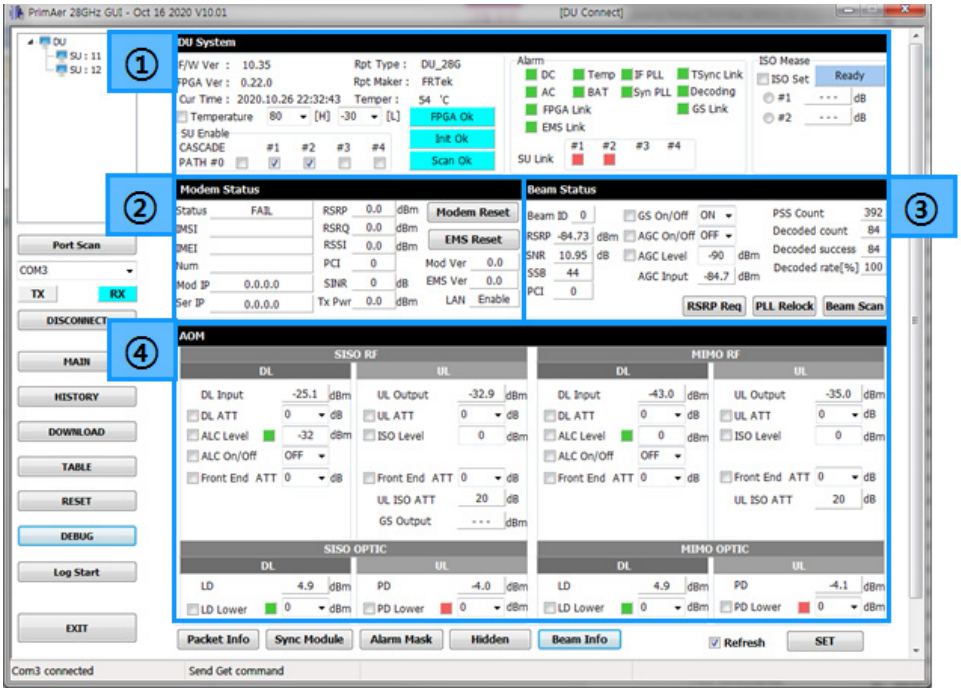

Figure 38. Initial GUI Main Screen.

① DU System

In this category, you can monitor and control the firmware version of the DU, the temperature status in the enclosure, the SU Cascade setting, various alarms of the DU, the isolation check function, etc., and the initial state of the FPGA, Array Ant, and the operation of the Beam Scan function. Items that can be monitored are implemented.

Items	Description	Remark
F/W Ver	CPU version	Status
FPGA Ver	FPGA version Display	Status
Cur Time	Current Time Display	Status
Rpt Type	Repeater Type Display	Status
Rpt Maker	Repeater Maker Display	Status
Temper	Repeater Temperature Display	Status
Temperature [H],[L]	Repeater Temperature Alarm의 Upper, Lower Control	Status/Control
SU Enable	SU Cascade Control	Status/Control

FPGA	FPGA Status	Status
Init	Array Ant. Status	Status
Scan	Beamfoarming Funtion Status	Status
DC	Alarm occurs when DC input is abnormal	Alarm
Temp	Alarm occurs at the upper and lower limit of temperature	Alarm
IF PLL	Alarm occurs when IF PLL is abnormal	Alarm
TSync Link	Alarm occurs in case of Tsync error	Alarm
AC	Alarm occurs when rectifier AC input is abnormal	Alarm
BAT	Alarm occurs when the rectifier battery is abnormal	Alarm
Syn PLL	Alarm occurs in case of sync PLL error	Alarm
Decoding	Alarm occurs when the decoded rate is abnormal	Alarm
FPGA Link	Alarm occurs when FPGA is defective	Alarm
GS Link	Array Ant. Alarm occurs when not connected	Alarm
EMS Link	Alarm occurs when EMS is not connected	Alarm
SU Link	Alarm occurs when SU is not fastened	Alarm
ISO Set	Isolation check function control and monitoring	Status/Control

② Beam Status

In this item, items that can monitor and control the signal of the base station selected by Array Ant. and the AGC function through the beamforming function of the DU are implemented.

Items	Description	Remark
Beam ID	Monitoring of the direction of the base station signal selected by Array Ant.	Status
RSRP	RSRP monitoring of signals input to Array Ant.	Status
SNR	SNR monitoring of signals input to Array Ant.	Status
SSB	SSB monitoring of signals input to Array Ant.	Status
PCI	PCI monitoring of the base station selected by Array Ant.	Status
GS On/Off	Array Ant. On/Off control	Control
AGC On/Off	Array Ant. AGC On/Off control	Control

AGC Level	AGC upper limit control	Control
AGC Input	RSRP monitoring of signals input to Array Ant.	Status
PSS Count	PSS monitoring of signals input to Array Ant.	Status
Decoded count	Monitoring the number of analysis of signals input to Array Ant.	Status
Decoded success	Monitoring the number of successful analysis of signals input to Array Ant.	Status
Decoded rate[%]	Monitoring success probability of analysis of signals input to Array Ant.	Status
RSRP Req	RSRP value polling control of signal input to Array Ant.	Control
PLL Relock	PLL Relock function control	Control
Beam Scan	Beamforming function control	Control

③ AOM

In this category, monitoring and control of RF items of DU optical module (DAOM), optical module ATT maximum 25dB control, Array Ant. An item that can control ATT up to 20dB is implemented.

Items	Description	Remark
DL Input	DAOM DL input monitoring	Status
DL ATT	DAOM DL ATT control	Control
ALC Level	DAOM DL ALC upper limit control and alarm generation	Alarm/Control
ALC On/Off	DAOM DL ALC On/Off control	Control
Front End ATT	Array Ant. RX ATT control	Control
UL Output	DAOM UL output monitoring	Status
UL ATT	DAOM UL ATT control	Status
ISO Level	DAOM DL/UL Isolation monitoring	Status
Front End ATT	Array Ant. TX ATT control	Control
UL ISO ATT	DAOM UL Isolation ATT monitoring	Status
GS Output	Array Ant. TX Level monitoring	Status
LD	Optical transmission intensity monitoring	Status
LD Lower	Alarm generation and lower limit control at optical transmission lower limit	Alarm/Control
PD	Optical reception intensity monitoring	Status

PD Lower	Alarm generation and lower limit control at light reception lower limit	Alarm/Control

6.1.3 SU Main Screen Configuration

Figure 39. SU Main Screen.

① SU System

In this item, you can monitor and control the firmware version of the SU, the temperature status in the enclosure, the SU ID setting, various alarms of the SU, and the isolation check function, and the item that can monitor the initial state of the Array Ant. is implemented.

Items	Description	Remark
F/W Ver	CPU Version Display	Status
Cur Time	Current Time Display	Status
Rpt Type	Repeater Type Display	Status
Rpt Maker	Repeater Maker Display	Status
Cur Temper	Repeater temperature Display	Status
SU Mode	SU Cascade, End Unit Monitoring	Status
SU ID	SU ID Control	Control
Temperature [H],[L]	Control of the upper and lower limits of the repeater temperature alarm	Control
PLL Freq	PLL Frequency Control	Control

Init	Array Ant. Status monitoring	Status
DC	Alarm occurs when DC input is abnormal	Alarm
Temp	Alarm occurs at the upper and lower limit of temperature	Alarm
TSync Link	Alarm occurs in case of Tsync Fail	Alarm
AC	Alarm occurs when rectifier AC input is abnormal	Alarm
BAT	Alarm occurs when the rectifier battery is abnormal	Alarm
GS Link	Array Ant. Alarm occurs when not connected	Alarm
IF PLL	Alarm occurs when IF PLL is abnormal	Alarm
DU Link	Alarm occurs when DU is not connected	Alarm
ISO Mease	Isolation check Minitoring	Status

② Beam Status

In this topic, Array Ant. Items that can control On/Off and PLL Relock functions are implemented.

Items	Description	Remark
GS On/Off	Array Ant. On/Off Control	Control
PLL Relock	PLL Relock Control	Control

③ AOM

In this section, the monitoring and control of the RF items of the SU optical module (SAOM) and the optical module ATT maximum 25dB control, Array Ant. An item that can control ATT up to 20dB is implemented.

Items	Description	Remark
DL Output	SAOM DL Input Monitoring	Status
DL ATT	SAOM DL ATT Control	Control
ALC Level	SAOM DL ALC upper limit control and alarm generation	Alarm/Control
ALC On/Off	SAOM DL ALC On/Off Control	Control
DL ISO ATT	SAOM DL Isolation ATT Monitoring	Status
Front End ATT	Array Ant. TX ATT Control	Control

GS Output	Array Ant. TX Level monitoring	Status
UL Input	SAOM UL Input monitoring	Status
UL ATT	SAOM UL ATT Control	Status
ALC Level	SAOM UL ALC upper limit control and alarm generation	Alarm/Control
ALC On/Off	SAOM UL ALC On/Off Control	Control
UL Cas ATT	SAOM UL Cascade ATT Control	Control
UL ISO ATT	SAOM UL Isolation ATT monitoring	Status
Front End ATT	Array Ant. RX ATT Control	Control
LD	Optical transmission intensity monitoring	Status
LD Lower	Alarm generation and lower limit control at optical transmission lower limit	Alarm/Control
PD	Optical reception intensity monitoring	Status
PD Lower	Alarm generation and lower limit control at light reception lower limit	Alarm/Control
Next LD	Next SU optical transmission intensity monitoring	Status
Next LD Lower	Next SU Optical transmission low limit alarm generation and low limit control	Alarm/Control
Next PD	Next SU optical reception intensity monitoring	Status
Next PD Lower	Next SU Optical reception low limit alarm generation and low limit control	Alarm/Control

PrimAer 39
Operating Manual

Fiber Radio Technologies CO., LTD.
All rights reserved.

- Copyright ⓒ FRTek Co., Ltd. All rights reserved.
- Without any authorization of FRTek Co., Ltd., the disclosure, distribution, reproduction and reuse of all or part of the information in this manual to the 3rd party are strictly prohibited