W-LAN Module Data Sheet

Cypress Chipset for 802.11b/g/n

Sample P/N : LBWA1KL1FX-TEMP

Confidential to Cambridge Mobile Telematics

The revision history of the product specification

Issued Date	Revision Code	Revision Page	Changed Items	Change Reason
Apr. 29. 2015	-	-	First Issue	
Sep. 17, 2015	A	P. 5 P.16	4. Dimensions, Marking and Terminal Configurations: Change Pin14 NC to GND Reference schematic	Correction
Oct. 29, 2015	B	P.7 P.8	4. Dimensions, Marking and Terminal Configurations, Add note of SDIO 4. Dimensions, Marking, and Terminal Configurations, Add pin 20, 27, 41 functional description. 6. Operating Condition, Add Specification Temperature Range	Addition
Mar. 18. 2016	C	P4 P8 P12	4. Dimensions, Marking and Terminal 6.1. Operating condition 10. DC/RF Characteristics	Addition Correction Correction
Oct 31, 2016	D	P8	6.1. Operating condition	Correction
Dec 14, 2016	E	P24	APPENDIX	Addition
Feb 9, 2017	F	P16	12. Reference Circuit	Correction
Feb 28, 2017	G		IC Part Number	Changed
Jul. 25, 2017	H	P8 P9	6.2. Power Up Sequence	Added “WLAN Boot up Sequence”
Mar. 20, 2018	I	P17	12. Reference Circuit	Added 32.768kHz X’tal in the reference circuit.
Jun.14.2018	J	P4	4.Dimensions,Marking and Terminal Configurations	Added dimensions m3 and m4
Dec.28.2018	K	P17 P22	12. Reference Circuit Soldering Conditions/Cleaning	Revised

Confidential to Cambridge Mobile Telematics

TABLE OF CONTENTS

1. Scope 3
2. Part Number 3
3. Block Diagram 3
4. Dimensions, Marking and Terminal Configurations 4
5. Rating 8
6. Operating Condition 8
6.1. Operating condition 8
6.2. Power Up Sequence 8
7. Digital I/O Requirements 10
8. External LPO Specification 10
9. Interface Timing 11
9.1. SDIO Timing (Default Mode) 11
9.2. SDIO Timing (High Speed Mode) 12
10. DC/RF Characteristics 13
10.1. DC/RF Characteristics for IEEE802.11b 13
10.2. DC/RF Characteristics for IEEE802.11g 14
10.3. DC/RF Characteristics for IEEE802.11n 15
11. Land pattern 16
12. Reference Circuit 17
13. Tape and Reel Packing 18
14. NOTICE 21
14.1. Storage Conditions: 21
14.2. Handling Conditions: 21
14.3. Standard PCB Design (Land Pattern and Dimensions): 21
14.4. Notice for Chip Placer: 21
14.5. Soldering Conditions: 22
14.6. Cleaning: 22
14.7. Operational Environment Conditions: 22
14.8. Input Power Capacity: 22
15. PRECONDITION TO USE OUR PRODUCTS 23

Please be aware that an important notice concerning availability, standard warranty and use in critical applications of Murata products and disclaimers thereto appears at the end of this specification sheet.

Confidential to Cambridge Mobile Telematics

1. Scope

This specification is applied to the IEEE802.11b/g/n W-LAN module.

- Interface : SDIO (WLAN)
- IC/Firmware : Cypress/CYW43364
- Reference Clock : Reference clock is embedded.
- MSL : Level 3
- RoHS : This module is compliant with the RoHS directive.

2. Part Number

Sample Part Number	LBWA1KL1FX-TEMP
EVK Part Number	LBWA1KL1FX-TEMP-D

3. Block Diagram

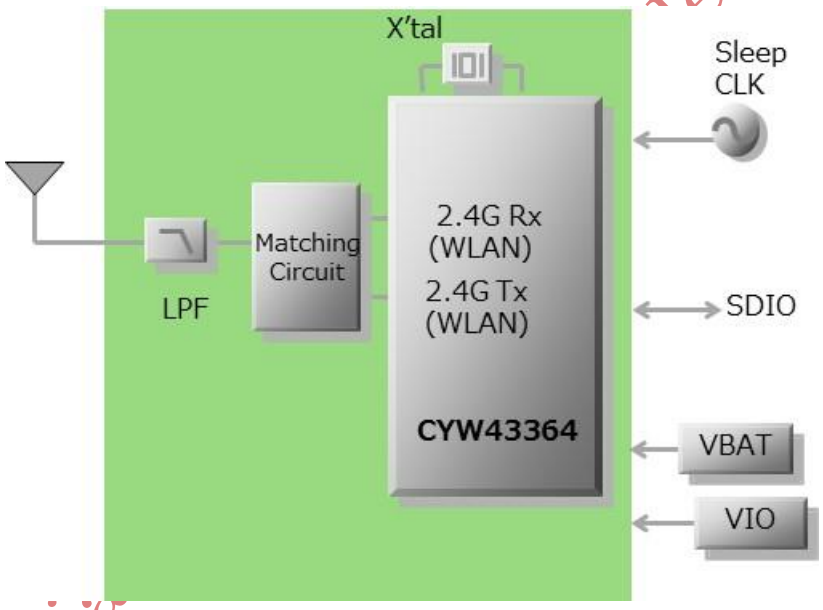

Confidentia
e Telematics

4. Dimensions, Marking and Terminal Configurations

< Top View > < Side View > < Bottom View >

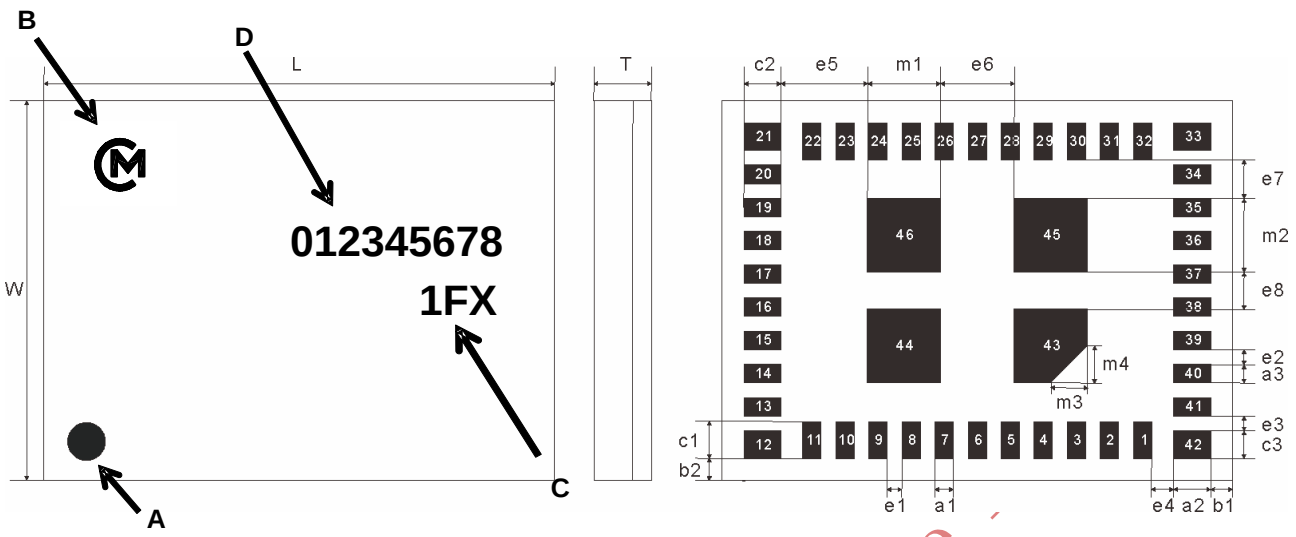

Marking	Meaning
A	Pin 1 Marking
B	Murata Logo
C	Module Type
D	Inspection Number

Dimensions (unit : mm)

Mark	Dimensions	Mark	Dimensions	Mark	Dimensions
L	6.95 +/- 0.2	W	5.15 +/- 0.2	T	1.1 max.
a1	0.25 +/- 0.10	a2	0.5 +/- 0.1	a3	0.25 +/- 0.10
b1	0.30 +/- 0.2	b2	0.30 +/- 0.2	c1	0.50 +/- 0.1
c2	0.50 +/- 0.1	c3	0.375 +/- 0.100	e1	0.2 +/- 0.1
e2	0.2 +/- 0.1	e3	0.2 +/- 0.1	e4	0.3 +/- 0.1
e5	1.175 +/- 0.100	e6	1.0 +/- 0.1	e7	0.525 +/- 0.100
e8	0.50 +/- 0.10	m1	1.0 +/- 0.1	m2	1.0 +/- 0.1
m3	0.5 +/- 0.1	m4	0.5 +/- 0.1		

Structure

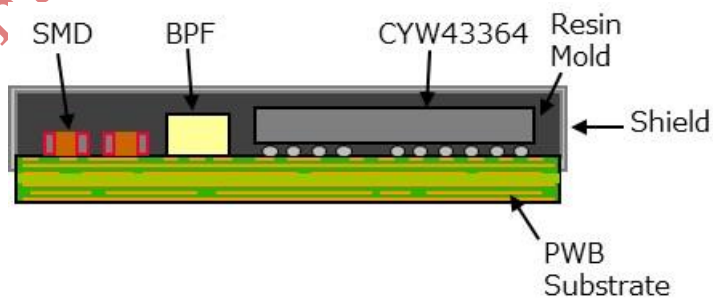

Confidential to Murata Mobile

Terminal Configurations

No.	Terminal Name	Type	Connection to IC Terminal	Description
(1)	GND	-		
(2)	NC	-		NC
(3)	NC	-		NC
(4)	NC	-		NC
(5)	NC	-		NC
(6)	NC	-		NC
(7)	NC	-		NC
(8)	NC	-		NC
(9)	NC	-		NC
(10)	NC	-		NC
(11)	NC	-		NC
(12)	GND	-		
(13)	NC	-		NC
(14)	GND	-		GND
(15)	WL_GPIO_4	I/O	GPIO_4	
(16)	NC	-		NC
(17)	WL_GPIO_2	I/O	GPIO_2	
(18)	WL_GPIO_1	I/O	GPIO_1	
(19)	GND	-		
(20)	SDIO_CLK	I	SDIO_CLK	SDIO clock input
(21)	GND	-		
(22)	SDIO_CMD	I/O	SDIO_CMD	SDIO command line
(23)	SDIO_DATA_2	I/O	SDIO_DATA_2	SDIO data line 2
(24)	SDIO_DATA_0	I/O	SDIO_DATA_0	SDIO data line 0
(25)	SDIO_DATA_3	I/O	SDIO_DATA_3	SDIO data line 3
(26)	SDIO_DATA_1	I/O	SDIO_DATA_1	SDIO data line 1
(27)	WL_GPIO_0_HOST_WAKE	O	GPIO_0	WLAN Host Wake

Confidential to Cambridge Mobile Telematics

(28)	WL_REG_ON	I	WL_REG_ON	Used by PMU to power up or power down the internal regulators used by the WLAN section. Also, when deasserted, this pin holds the WLAN section in reset. This pin has an internal 200kΩ pull-down resistor that is enabled by default. It can be disabled through programming.
(29)	GND	-		
(30)	VBAT	PI	LDO_VDDBAT5V, SR_VDDBAT5V	
(31)	VIN_LDO	PI	LDO_VDD1P5, WLRF_VDD_1P35	
(32)	GND (SR_PVSS)	-		
(33)	GND (SR_PVSS)	-		
(34)	SR_VLX	PO	SR_VLX	CBUCK switching regulator output.
(35)	GND	-		
(36)	VIO	PI	SCC_VDDIO, SYS_VDDIO	
(37)	LPO_IN (32kHz)	I	LPO_IN	External sleep clock input (32.768kHz).
(38)	NC	-		NC
(39)	NC	-		NC
(40)	GND	-		
(41)	ANT	-	I	RF(WiFi) Signal
(42) ～ (46)	GND	-		

Confidential to Cambridge Mobile Telematics

SDIO Pin Description

No.	Pin Name	(i) SD 4-bit Mode		(ii) SD 1-bit Mode	
20	SDIO_CLK	CLK	Clock	CLK	Clock
24	SDIO_D0	DATA0	Data line 0	DATA	Data line
26	SDIO_D1	DATA1	Data line 1 /Interrupt	IRQ	Interrupt
23	SDIO_D2	DATA2	Data line 2	NC	Not used
25	SDIO_D3	DATA3	Data line 3	NC	Not used
22	SDIO_CMD	CMD	Command line	CMD	Command line

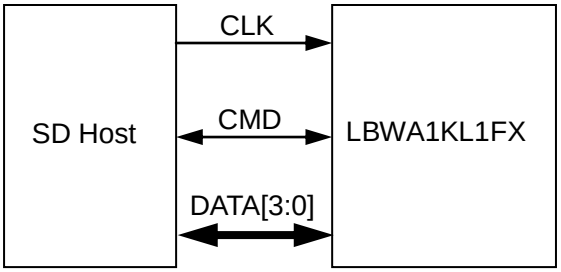

(i) SD 4-bit Mode

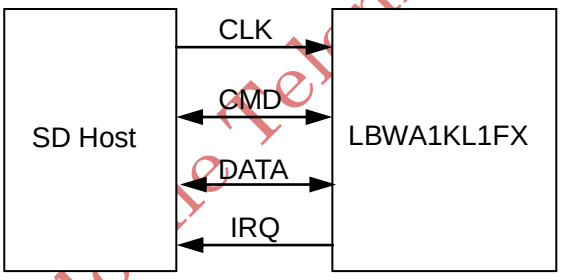

(ii) SD 1-bit Mode

Note : 10 to 100kΩ pull-ups are required on the four DATA lines and the CMD line. This requirement must be met during all operating states by using external pull-up resisters or properly programming internal SDIO host pull-ups.

Confidential to Cambridge Mobile Telematics

5. Rating

		min.	max.	unit
Storage Temperature		-40	+85	deg.C
Supply Voltage	VBAT	-0.5	5.0	V
	VDDIO	-0.5	3.9	V

* Stresses in excess of the absolute ratings may cause permanent damage. Functional operation is not implied under these conditions. Exposure to absolute ratings for extended periods of time may adversely affect reliability. No damage assuming only one parameter is set at limit at a time with all other parameters are set within operating condition.

6. Operating Condition

6.1. Operating condition

		min.	typ.	max.	unit
Operating Temperature Range		-40	+25	+85	deg.C
Specification Temperature Range		-10	+25	+55	deg.C
Operating Voltage	VBAT	3.0	3.6	4.8	V
	VDDIO	1.71	1.8 or 3.3	3.63	V
Specification Voltage	VBAT	3.2	3.6	4.2	V
	VDDIO	1.71	1.8 or 3.3	3.63	V

[Note] All RF characteristics in this datasheet are defined by Specification Temperature Range and Specification Voltage.

6.2. Power Up Sequence

- VBAT should not rise 10%-90%faster than 40 microsecond.
- VBAT should be up before or at the same time as VIO. VIO should NOT be present fast or be held high before VBAT is high.

Power On Sequence for WLAN

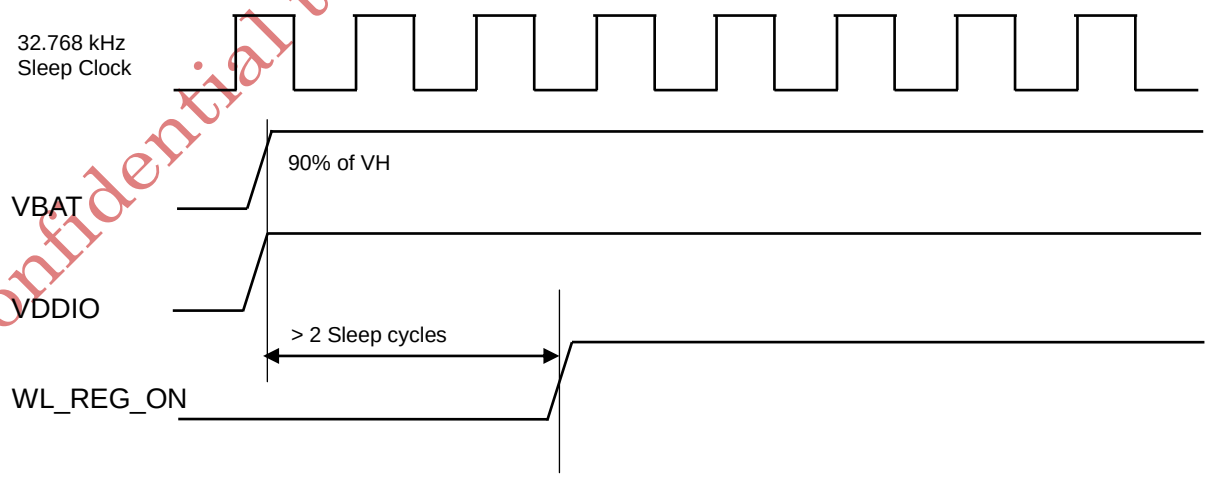

Confidential to Cambridge Mobile Telematics

WLAN Boot up Sequence

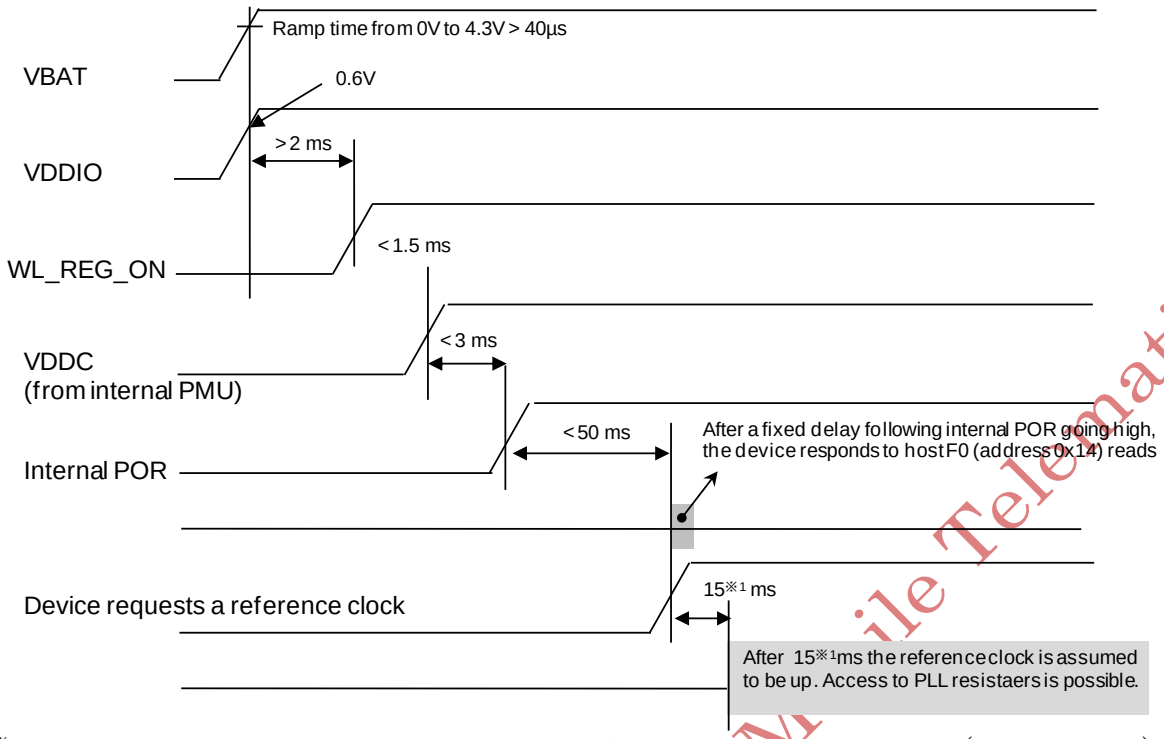

※1 This wait time is programmable in sleep-clock increments from 1 to 255 (30us to 15ms)

Confidential to Cambridge Mobile Telematics

7. Digital I/O Requirements

SDIO Interface I/O Pins	Sym	min.	max.	unit
Input low voltage (VDDIO = 3.3V)	V_{IL}	-	0.25*VDDIO	V
Input high voltage (VDDIO = 3.3V)	V_{IH}	0.625*VDDIO	-	V
Input low voltage (VDDIO = 1.8V))	V_{IL}	-	0.58	V
Input high voltage (VDDIO = 1.8V)	V_{IH}	1.27	-	V
Output low voltage (VDDIO = 3.3V)	V_{OL}	-	0.125*VDDIO	V
Output high voltage (VDDIO = 3.3V)	V_{OH}	0.75*VDDIO	-	V
Output low voltage (VDDIO = 1.8V)	V_{OL}	-	0.45	V
Output high voltage (VDDIO = 1.8V)	V_{OH}	1.40	-	V

Other Digital I/O Pins	Sym	min.	max.	unit
Input low voltage (VDDIO = 3.3V)	V_{IL}	-	0.8	V
Input high voltage (VDDIO = 3.3V)	V_{IH}	2.0	-	V
Input low voltage (VDDIO = 1.8V))	V_{IL}	-	0.35*VDDIO	V
Input high voltage (VDDIO = 1.8V)	V_{IH}	0.65*VDDIO	-	V
Output low voltage (VDDIO = 3.3V)	V_{OL}	-	0.40	V
Output high voltage (VDDIO = 3.3V)	V_{OH}	VDDIO-0.4	-	V
Output low voltage (VDDIO = 1.8V)	V_{OL}	-	0.45	V
Output high voltage (VDDIO = 1.8V)	V_{OH}	VDDIO-0.45	-	V

8. External LPO Specification

Parameter	Condition/Notes	Specification			
		Minimum	Typical	Maximum	Units
Frequency	-	-	32.768	-	KHz
Frequency accuracy		-200	-	+200	ppm
Duty cycle	-	30	-	70	%
Input amplitude		200	-	3300	mV, p-p
Signal type	Square wave or sine wave	-	-	-	-
Input impedance[a]	Resistive	100	-	-	kΩ
	Capacitive	-	-	5	pF
Clock jitter		-	-	10,000	ppm

a. When power is applied or switched off.

Confidential to Cambridge Mobile Telematics

9. Interface Timing

9.1. SDIO Timing (Default Mode)

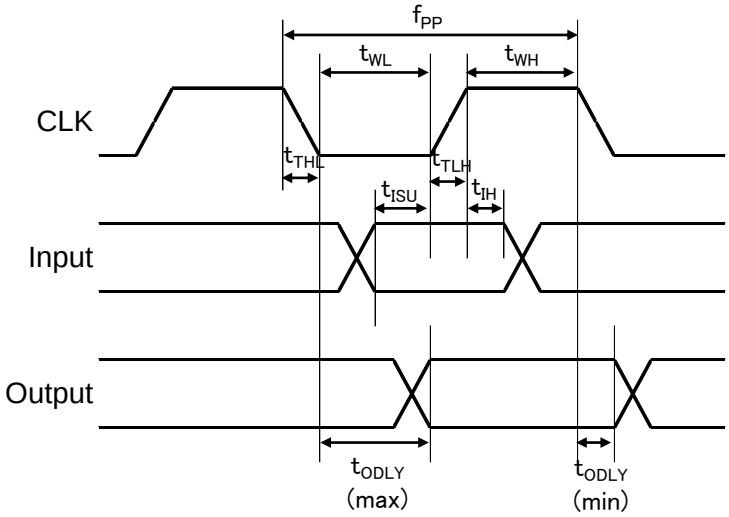

Parameter	Symbol	Min(1)	Typ(1)	Max(1)	Unit
Clock CLK (All values are referred to min. VIH and max. VIL(2)					
Frequency-Data Transfer Mode	fPP	0	-	25	MHz
Frequency-Identification Mode	fOD	0	-	400	kHz
Clock Low Time	tWL	10	-	-	ns
Clock High Time	tWH	10	-	-	ns
Clock Rise Time	tTLH	-	-	10	ns
Clock Fall Time	tTHL	-	-	10	ns
Inputs: CMD, DAT (referenced to CLK)					
Input Setup Time	tISU	5	-	-	ns
Input Hold Time	tIH	5	-	-	ns
Outputs: CMD, DAT (referenced to CLK)					
Output Delay time-Data Transfer Mode	tODLY	0	-	14	ns
Output Delay time-Identification Mode	tODLY	0	-	50	ns

(1). Timing is based on CL ≤ 40pF load on CMD and Data.
(2). Min (Vih) = 0.7*VDDIO and max (Vil) = 0.2*VDDIO.

Confidential to Cambridge Mobile Telematics

9.2. SDIO Timing (High Speed Mode)

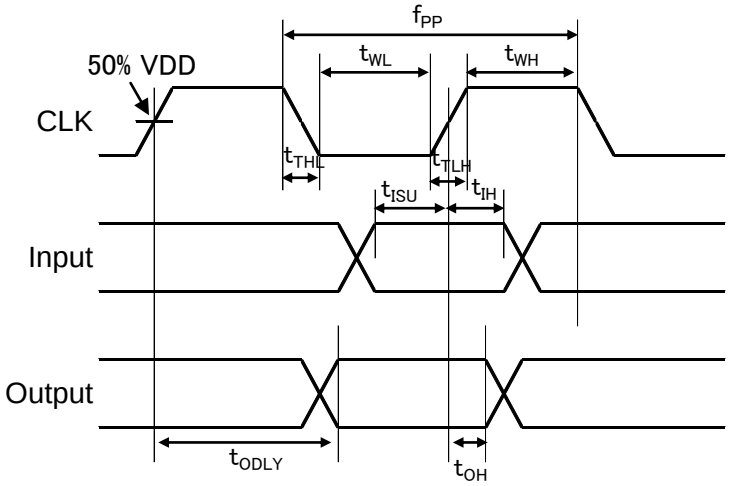

Parameter	Symbol	Min(1)	Typ(1)	Max(1)	Unit
Clock CLK (All values are referred to min. VIH and max. VIL(2)					
Frequency-Data Transfer Mode	fPP	0	-	50	MHz
Frequency-Identification Mode	fOD	0	-	400	kHz
Clock Low Time	tWL	7	-	-	ns
Clock High Time	tWH	7	-	-	ns
Clock Rise Time	tTLH	-	-	3	ns
Clock Fall Time	tTHL	-	-	3	ns
Inputs: CMD, DAT (referenced to CLK)					
Input Setup Time	tISU	6	-	-	ns
Input Hold Time	tIH	2	-	-	ns
Outputs: CMD, DAT (referenced to CLK)					
Output Delay time-Data Transfer Mode	tODLY	-	-	14	ns
Output Hold time	tOH	2.5	-	-	ns
Total System Capacitance (each line)	CL	-	-	40	pF

(1). Timing is based on CL ≤ 40pF load on CMD and Data.
(2). Min (Vih) = 0.7*VDDIO and max (Vil) = 0.2*VDDIO.

Confidential to Cambridge Mobile Telematics

10. DC/RF Characteristics

10.1. DC/RF Characteristics for IEEE802.11b

Specification	IEEE802.11b
Mode	DSSS / CCK
Frequency	2400 - 2483.5MHz
Data rate	1, 2, 5.5, 11Mbps

Conditions : 25deg.C, VBAT=3.6V, VDDIO= 3.3V, Output power setting=17dBm, 11Mbps mode

Items	Contents			
- DC Characteristics -	min.	typ.	max.	unit
DC current				
1) Tx mode (1024byte, 20usec interval)		320	370	mA
2) Rx mode		47	60	mA
- Tx Characteristics -	min.	typ.	max.	unit
Output Power (tolerance)	15	17	19	dBm
Spectrum Mask				
1) 1st side lobes	-	-43	-30	dBr
2) 2nd side lobes	-	-54	-50	dBr
Power-on and Power-down ramp	-		2.0	µsec
RF Carrier Suppression	15		-	dB
Modulation Accuracy (EVM)	-	15	35	%
Outband Spurious Emissions				
1) 30MHz to 1GHz (BW=100kHz)	-	-	-36	dBm
2) 1GHz to 12.75GHz (BW=100kHz)	-	-	-30	dBm
3) 1.8GHz to 1.9GHz (BW=100kHz)	-	-	-47	dBm
4) 5.15GHz to 5.3GHz (BW=100kHz)	-	-	-47	dBm
- Rx Characteristics -	min.	typ.	max.	unit
Minimum Input Level (FER ≦ 8%)	-	-89	-76	dBm
Maximum Input Level (FER ≦ 8%)	-10	-	-	dBm
Adjacent Channel Rejection (FER ≦ 8%)	35	-	-	dB

Confidential to Cambridge Mobile Telematics

10.2. DC/RF Characteristics for IEEE802.11g

Specification	IEEE802.11g
Mode	OFDM
Frequency	2400 - 2483.5MHz
Data rate	6, 9, 12, 18, 24, 36, 48, 54Mbps

Conditions : 25deg.C, VBAT=3.6V, VDDIO= 3.3V, Output power setting=13dBm, 54Mbps mode

Items	Contents			
- DC Characteristics -	min.	typ.	max.	unit
DC current				
1) Tx mode (1024byte, 20usec interval)		270	310	mA
2) Rx mode		47	60	mA
- Tx Characteristics -	min.	typ.	max.	unit
Output Power (tolerance)	11	13	15	dBm
Spectrum Mask				
1) 9MHz to 11MHz (0dB ~ -20dB)		-33	-20	dBr
2) 11MHz to 20MHz (-20dB ~ -28dB)		-41	-28	dBr
3) 20MHz to 30MHz (-28dB ~ -40dB)		-53	-40	dBr
4) 30MHz to 33MHz (-40dB)		-53	-40	dBr
Constellation Error (EVM)	-	-30	-25	dB
Outband Spurious Emissions				
1) 30MHz to 1GHz (BW=100kHz)	-	-	-36	dBm
2) 1GHz to 12.75GHz (BW=100kHz)	-	-	-30	dBm
3) 1.8GHz to 1.9GHz (BW=100kHz)	-	-	-47	dBm
4) 5.15GHz to 5.3GHz (BW=100kHz)	-	-	-47	dBm
- Rx Characteristics -	min.	typ.	max.	unit
Minimum Input Level (PER ≤ 10%)	-	-75	-65	dBm
Maximum Input Level (PER ≤ 10%)	-20	-	-	dBm
Adjacent Channel Rejection (PER ≤ 10%)	-1	-	-	dB

Confidential to Cambridge Telematics

10.3. DC/RF Characteristics for IEEE802.11n

Specification	IEEE802.11n
Mode	OFDM
Frequency	2400 - 2483.5MHz
Data rate	6.5, 13, 19.5, 26, 39, 52, 58.5, 65Mbps

Conditions : 25deg.C, VBAT=3.6V, VDDIO= 3.3V, Output power setting=12dBm, 65Mbps mode

Items	Contents			
- DC Characteristics -	min.	typ.	max.	unit
DC current				
1) Tx mode (1024byte, 20usec interval)		260	300	mA
2) Rx mode		47	60	mA
- Tx Characteristics -	min.	typ.	max.	unit
Output Power (tolerance)	10	12	14	dBm
Spectrum Mask				
1) 9MHz to 11MHz (0dB ~ -20dB)		-33	-20	dBr
2) 11MHz to 20MHz (-20dB ~ -28dB)		-41	-28	dBr
3) 20MHz to 30MHz (-28dB ~ -45dB)		-53	-45	dBr
4) 30MHz to 33MHz (-45dB)		-53	-45	dBr
Constellation Error (EVM)	-	-31	-27	dB
Outband Spurious Emissions				
1) 30MHz to 1GHz	-	-	-36	dBm
2) 1GHz to 12.75GHz	-	-	-30	dBm
3) 1.8GHz to 1.9GHz	-	-	-47	dBm
4) 5.15GHz to 5.3GHz	-	-	-47	dBm
- Rx Characteristics -	min.	typ.	max.	unit
Minimum Input Level (PER≤10%)	-	-73	-64	dBm
Maximum Input Level (PER ≤ 10%)	-20	-	-	dBm
Adjacent Channel Rejection (PER ≤ 10%)	-2	-	-	dB

Confidential to Cambridge Telematics

11. Land pattern

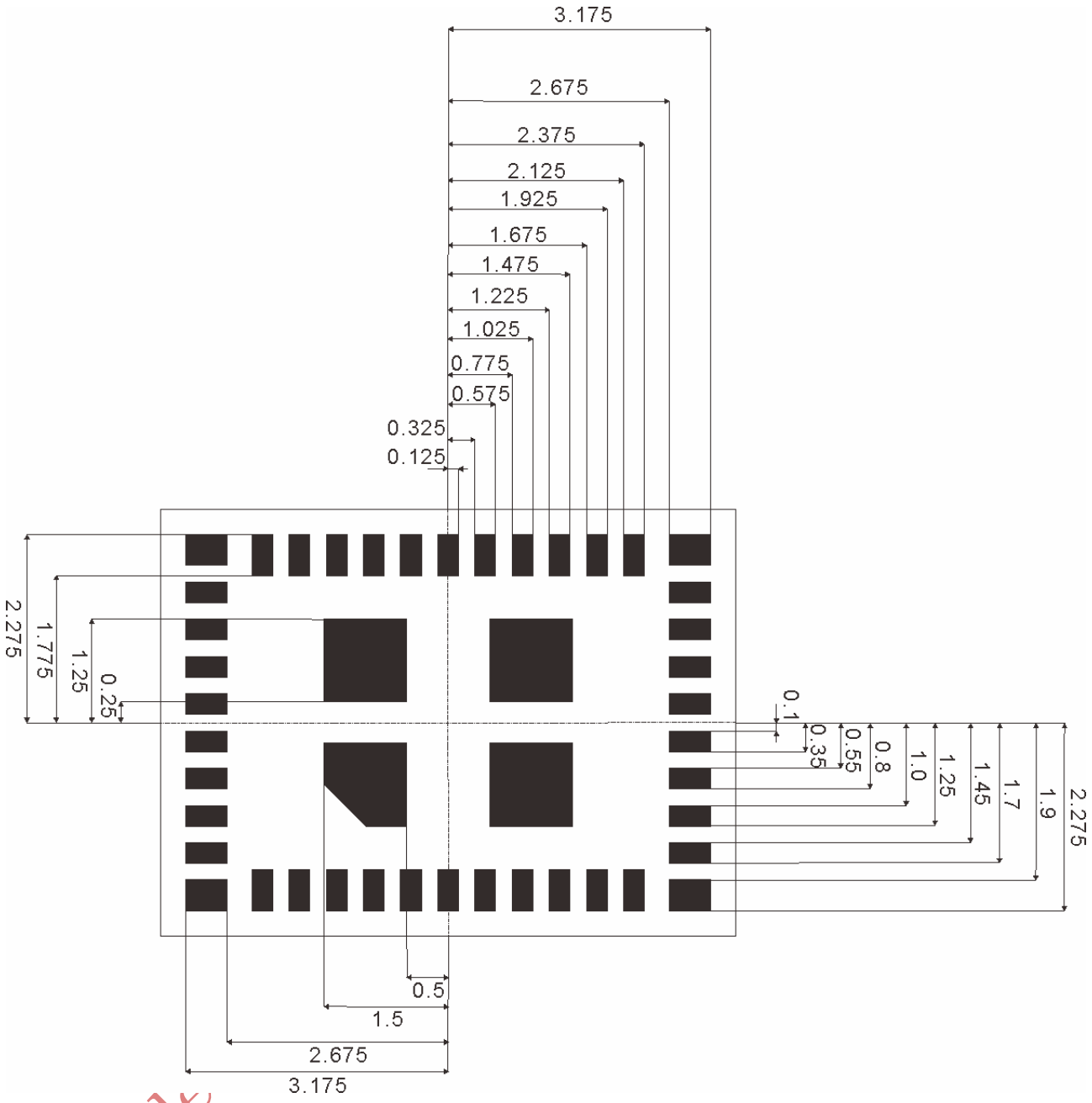

Top View. Unit : mm

Confide

12. Reference Circuit

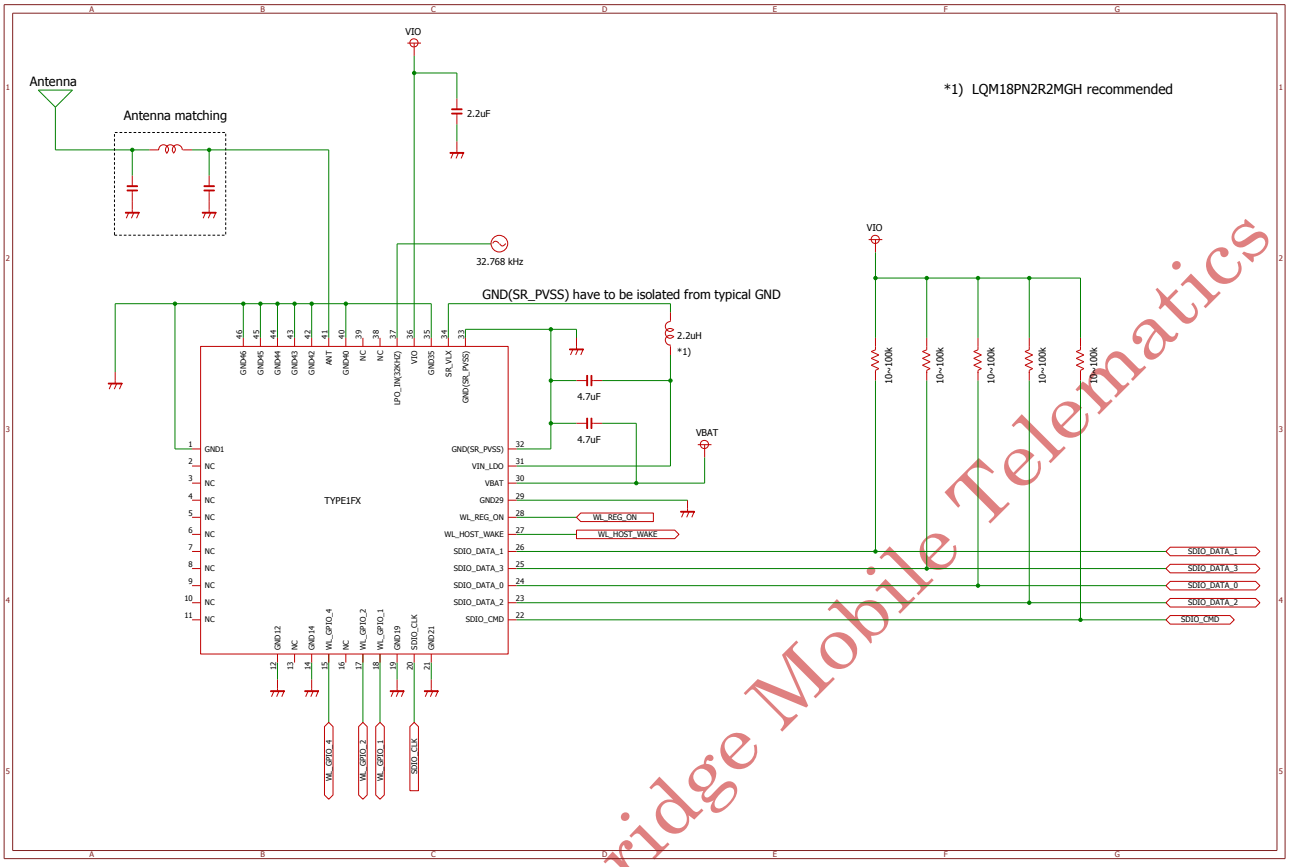

Confidential to Cambridge Mobile Telematics

13. Tape and Reel Packing

(1) Dimensions of Tape (Plastic tape)

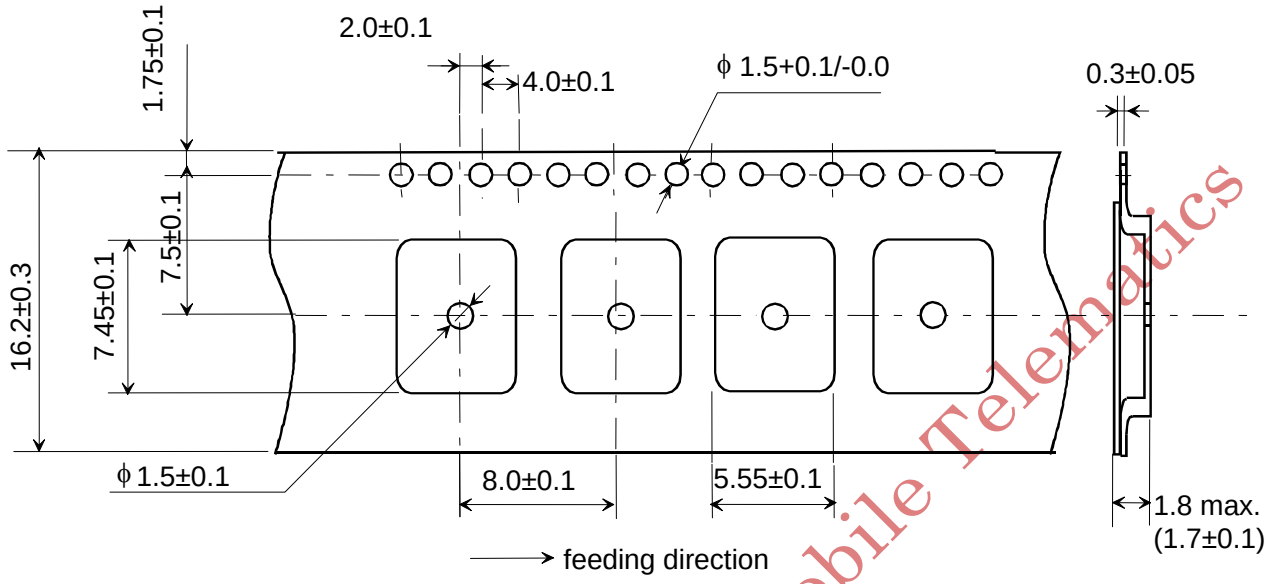

1) The corner and ridge radiuses (R) of inside cavity are 0.3mm max.
2) Cumulative tolerance of 10 pitches of the sprocket hole is +/-0.2mm
3) Measuring of cavity positioning is based on cavity center in accordance with JIS/IES standard.

(2) Dimensions of Reel

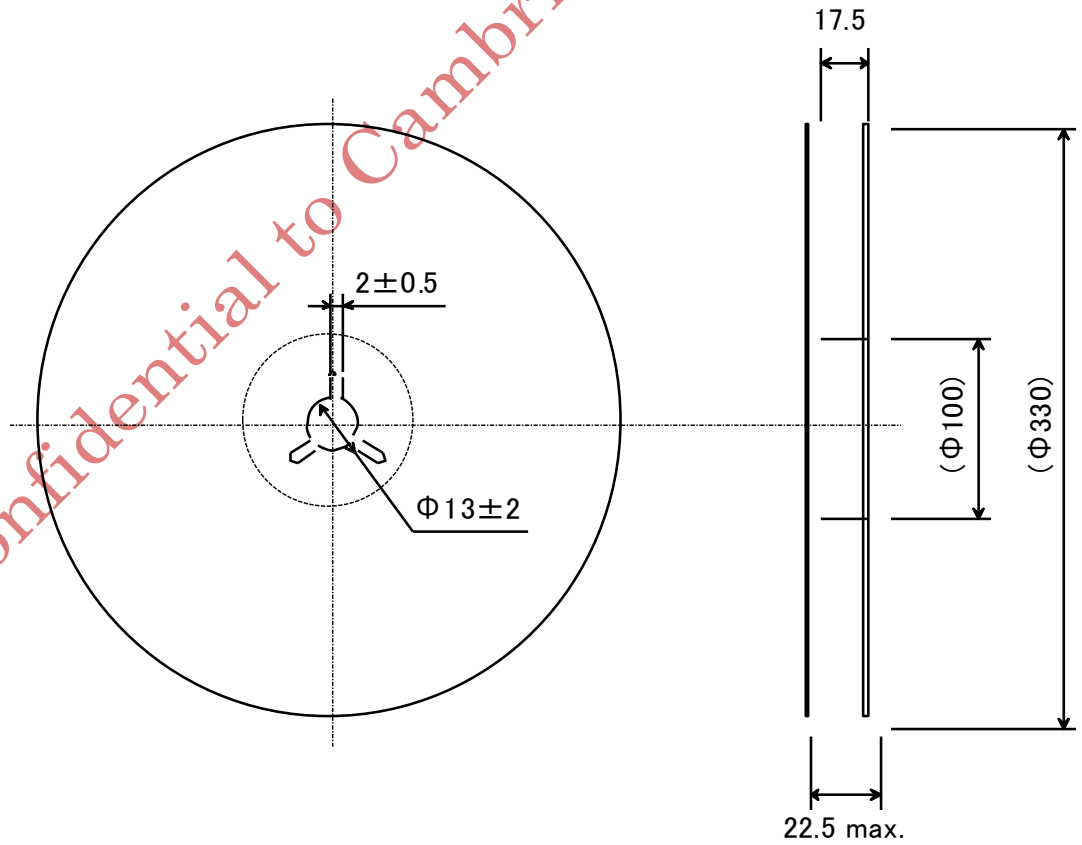

(unit : mm)

Confidential to Cambridge Mobile Telematics

(3) Taping Diagrams

[1] Feeding Hole : As specified in (1)

[2] Hole for chip : As specified in (1)

[3] Cover tape : 62μm in thickness

[4] Base tape : As specified in (1)

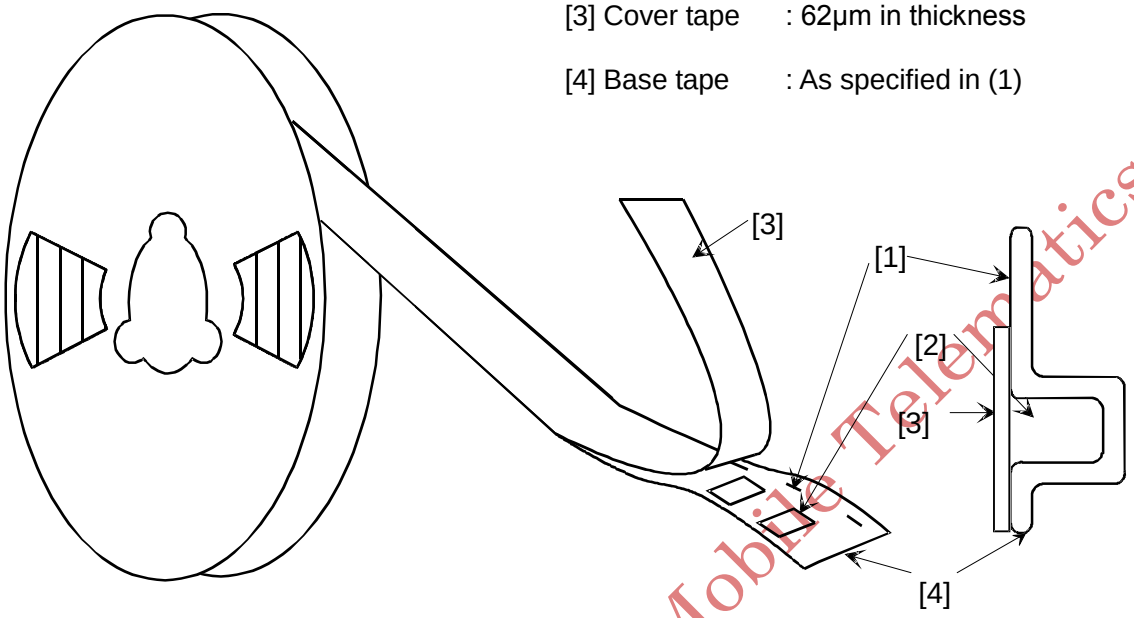

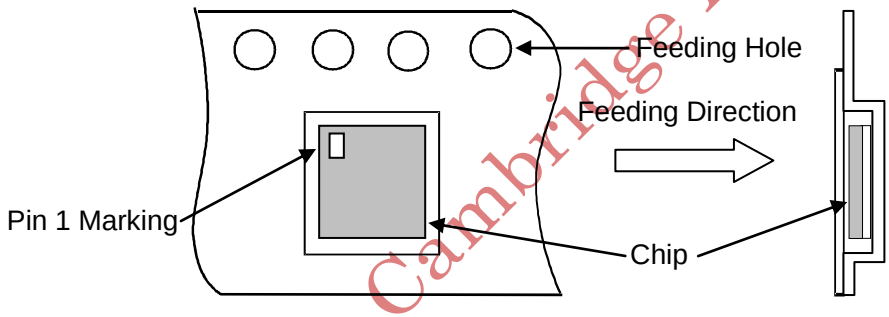

(4) Leader and Tail tape

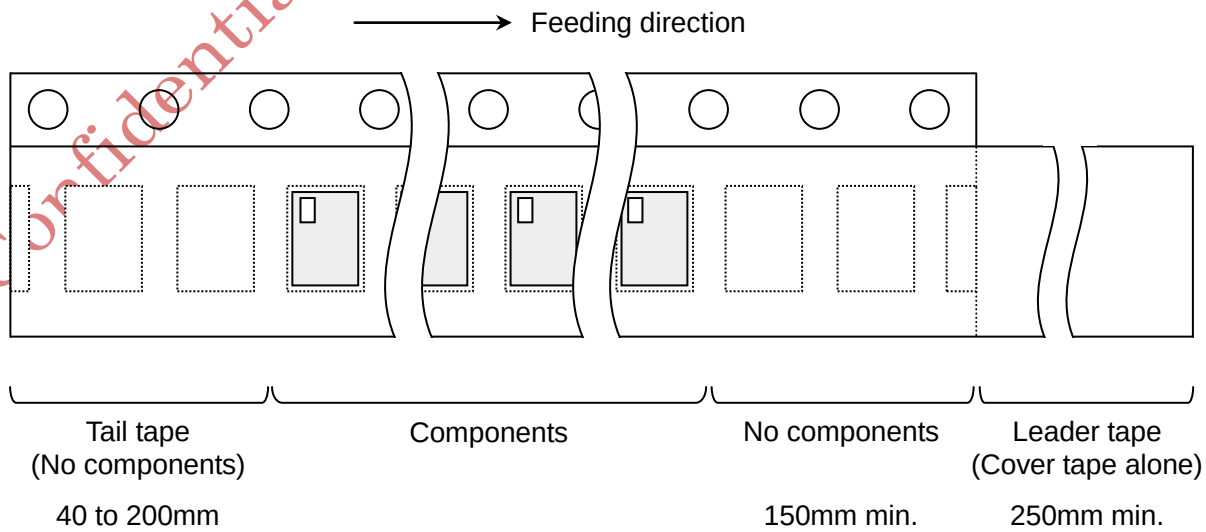

Confidential to Cambridge Mobile Telematics

(5) The tape for chips are wound clockwise, the feeding holes to the right side as the tape is pulled toward the user.

(6) The cover tape and base tape are not adhered at no components area for 250mm min.

(7) Tear off strength against pulling of cover tape : 5N min.

(8) Packaging unit : 1000pcs./ reel

(9) material : Base tape : Plastic
Real : Plastic
Cover tape, cavity tape and reel are made the anti-static processing.

(10) Peeling of force : 1.1N max. in the direction of peeling as shown below.

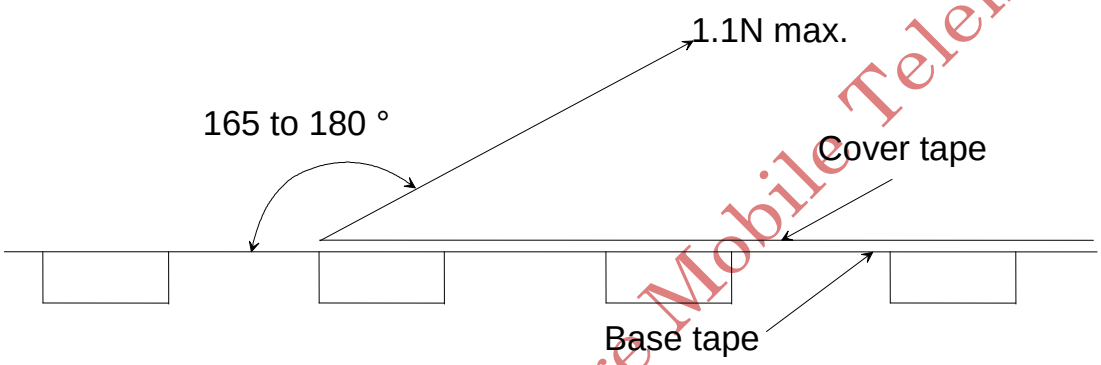

(11) Packaging (Humidity proof Packing)

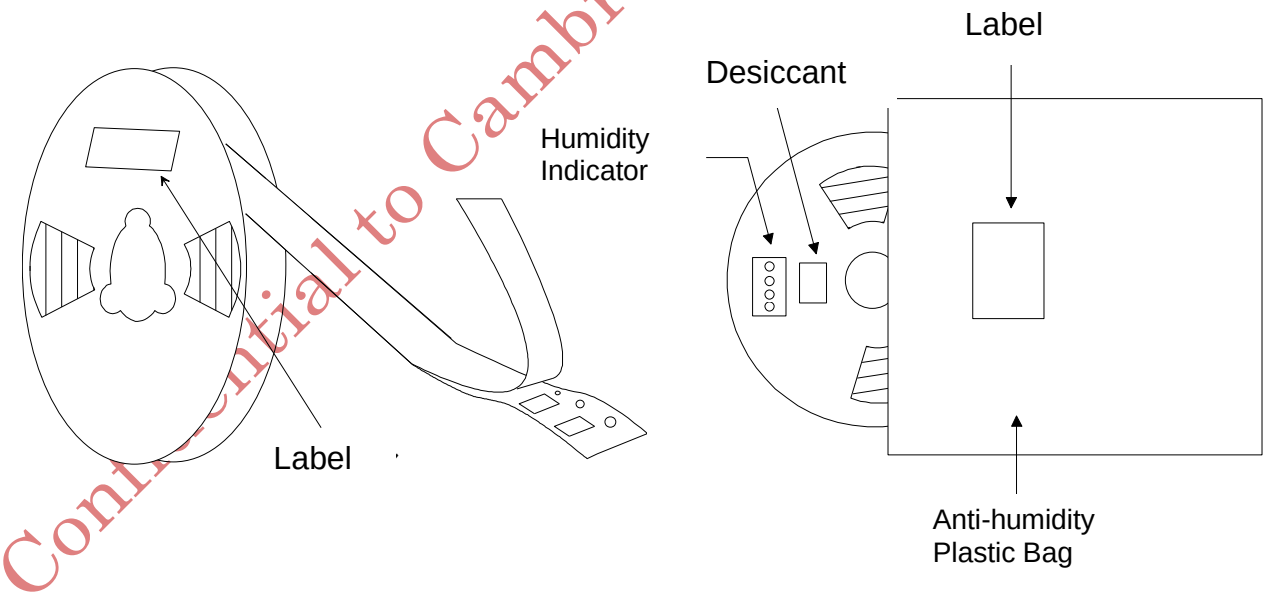

Tape and reel must be sealed with the anti-humidity plastic bag. The bag contains the desiccant and the humidity indicator.

Confidential to Cambridge Mobile Telematics

14. NOTICE

14.1. Storage Conditions:

Please use this product within 6month after receipt.
- The product shall be stored without opening the packing under the ambient temperature from 5 to 35deg.C and humidity from 20 to 70%RH.
(Packing materials, in particular, may be deformed at the temperature over 40deg.C.)
- The product left more than 6months after reception, it needs to be confirmed the solderbility before used.
- The product shall be stored in non corrosive gas (Cl_2, NH_3, SO_2, NO_x, etc.).
- Any excess mechanical shock including, but not limited to, sticking the packing materials by sharp object and dropping the product, shall not be applied in order not to damage the packing materials.

This product is applicable to MSL3 (Based on JEDEC Standard J-STD-020)
- After the packing opened, the product shall be stored at ≦30deg.C / ≦60%RH and the product shall be used within 168hours.
- When the color of the indicator in the packing changed, the product shall be baked before soldering.

Baking condition: 125+5/-0deg.C, 24hours, 1time
The products shall be baked on the heat-resistant tray because the material (Base Tape, Reel Tape and Cover Tape) are not heat-resistant.

14.2. Handling Conditions:

Be careful in handling or transporting products because excessive stress or mechanical shock may break products.

Handle with care if products may have cracks or damages on their terminals, the characteristics of products may change. Do not touch products with bear hands that may result in poor solder ability and destroy by static electrical charge.

14.3. Standard PCB Design (Land Pattern and Dimensions):

All the ground terminals should be connected to the ground patterns. Furthermore, the ground pattern should be provided between IN and OUT terminals. Please refer to the specifications for the standard land dimensions.

The recommended land pattern and dimensions is as Murata's standard. The characteristics of products may vary depending on the pattern drawing method, grounding method, land dimensions, land forming method of the NC terminals and the PCB material and thickness. Therefore, be sure to verify the characteristics in the actual set. When using non-standard lands, contact Murata beforehand.

14.4. Notice for Chip Placer:

When placing products on the PCB, products may be stressed and broken by uneven forces from a worn-out chucking locating claw or a suction nozzle. To prevent products from damages, be sure to follow the specifications for the maintenance of the chip placer being used. For the positioning of products on the PCB, be aware that mechanical chucking may damage products.

Confidential to Cambridge Mobile Telematics

14.5. Soldering Conditions:

The recommendation conditions of soldering are as in the following figure.
Soldering must be carried out by the above mentioned conditions to prevent products from damage. Set up the highest temperature of reflow within 260 °C. Contact Murata before use if concerning other soldering conditions.

Reflow soldering standard conditions (Example)

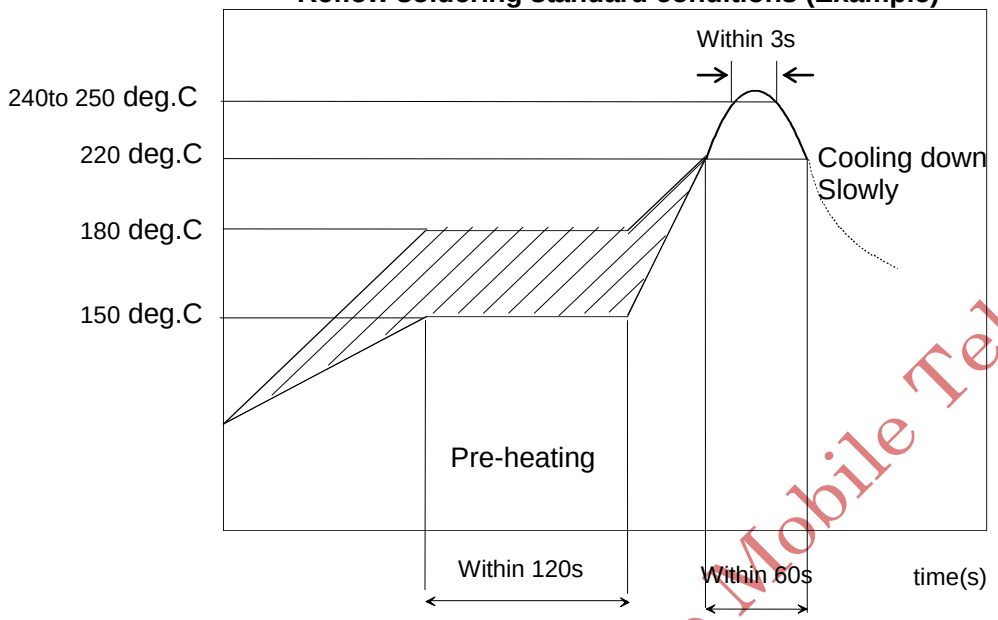

Please use the reflow within 2 times.
Use rosin type flux or weakly active flux with a chlorine content of 0.2 wt % or less.

14.6. Cleaning:

Since this Product is Moisture Sensitive, any cleaning is not recommended. If any cleaning process is done the customer is responsible for any issues or failures caused by the cleaning process.

14.7. Operational Environment Conditions:

Products are designed to work for electronic products under normal environmental conditions (ambient temperature, humidity and pressure). Therefore, products have no problems to be used under the similar conditions to the above-mentioned. However, if products are used under the following circumstances, it may damage products and leakage of electricity and abnormal temperature may occur.

- In an atmosphere containing corrosive gas (Cl_2, NH_3, SO_x, NO_x, etc.).
- In an atmosphere containing combustible and volatile gases.
- Dusty place.
- Direct sunlight place.
- Water splashing place.
- Humid place where water condenses.
- Freezing place.

If there are possibilities for products to be used under the preceding clause, consult with Murata before actual use.
As it might be a cause of degradation or destruction to apply static electricity to products, do not apply static electricity or excessive voltage while assembling and measuring.

14.8. Input Power Capacity:

Products shall be used in the input power capacity as specified in this specifications.
Inform Murata beforehand, in case that the components are used beyond such input power capacity range.

Confidential to Cambridge Mobile Telematics

15. PRECONDITION TO USE OUR PRODUCTS

PLEASE READ THIS NOTICE BEFORE USING OUR PRODUCTS.

Please make sure that your product has been evaluated and confirmed from the aspect of the fitness for the specifications of our product when our product is mounted to your product.
All the items and parameters in this product specification/datasheet/catalog have been prescribed on the premise that our product is used for the purpose, under the condition and in the environment specified in this specification. You are requested not to use our product deviating from the condition and the environment specified in this specification.
Please note that the only warranty that we provide regarding the products is its conformance to the specifications provided herein. Accordingly, we shall not be responsible for any defects in products or equipment incorporating such products, which are caused under the conditions other than those specified in this specification.
WE HEREBY DISCLAIMS ALL OTHER WARRANTIES REGARDING THE PRODUCTS, EXPRESS OR IMPLIED, INCLUDING WITHOUT LIMITATION ANY WARRANTY OF FITNESS FOR A PARTICULAR PURPOSE, THAT THEY ARE DEFECT-FREE, OR AGAINST INFRINGEMENT OF INTELLECTUAL PROPERTY RIGHTS.
The product shall not be used in any application listed below which requires especially high reliability for the prevention of such defect as may directly cause damage to the third party's life, body or property. You acknowledge and agree that, if you use our products in such applications, we will not be responsible for any failure to meet such requirements. Furthermore, YOU AGREE TO INDEMNIFY AND DEFEND US AND OUR AFFILIATES AGAINST ALL CLAIMS, DAMAGES, COSTS, AND EXPENSES THAT MAY BE INCURRED, INCLUDING WITHOUT LIMITATION, ATTORNEY FEES AND COSTS, DUE TO THE USE OF OUR PRODUCTS IN SUCH APPLICATIONS.

- Aircraft equipment.
- Aerospace equipment
- Undersea equipment.
- Power plant control equipment
- Medical equipment.
- Transportation equipment (vehicles, trains, ships, elevator, etc.).
- Traffic signal equipment.
- Disaster prevention / crime prevention equipment.
- Burning / explosion control equipment
- Application of similar complexity and/ or reliability requirements to the applications listed in the above.

We expressly prohibit you from analyzing, breaking, reverse-engineering, remodeling altering, and reproducing our product. Our product cannot be used for the product which is prohibited from being manufactured, used, and sold by the regulations and laws in the world.
We do not warrant or represent that any license, either express or implied, is granted under any our patent right, copyright, mask work right, or our other intellectual property right relating to any combination, machine, or process in which our products or services are used. Information provided by us regarding third-party products or services does not constitute a license from us to use such products or services or a warranty or endorsement thereof. Use of such information may require a license from a third party under the patents or other intellectual property of the third party, or a license from us under our patents or other intellectual property.
Please do not use our products, our technical information and other data provided by us for the purpose of developing of mass-destruction weapons and the purpose of military use.
Moreover, you must comply with "foreign exchange and foreign trade law", the "U.S. export administration regulations", etc.
Please note that we may discontinue the manufacture of our products, due to reasons such as end of supply of materials and/or components from our suppliers.
By signing on specification sheet or approval sheet, you acknowledge that you are the legal representative for your company and that you understand and accept the validity of the contents herein. When you are not able to return the signed version of specification sheet or approval sheet within 30 days from receiving date of specification sheet or approval sheet, it shall be deemed to be your consent on the content of specification sheet or approval sheet. Customer acknowledges that engineering samples may deviate from specifications and may contain defects due to their development status. We reject any liability or product warranty for engineering samples. In particular we disclaim liability for damages caused by
- the use of the engineering sample other than for evaluation purposes, particularly the installation or integration in the product to be sold by you,
-deviation or lapse in function of engineering sample,
-improper use of engineering samples.
We disclaim any liability for consequential and incidental damages.
If you can't agree the above contents, you should inquire our sales.

Confidential to Cambridge Mobile Telematics

APPENDIX

Confidential to Cambridge Mobile Telematics

1DX Installation Manual (FCC)

FCC ID of this product is as follows.

FCC ID: 2AFGD-MUW1FX

For OEM integration only – device cannot be sold to general public.
Therefore we will ask OEM to include the following statements required by FCC on the product and in the Installation manual Notice.

Contents
1. Antenna
2. Notice

1. Antenna

■Please perform the antenna design that followed the specifications of the antenna.

The concrete contents of a check are the following three points.
1) It is the same type as the antenna type of antenna specifications.
   Confirm the same size as the Gerber file.
2) An antenna gain is lower than a gain given in antenna specifications.
   Measure the gain, and confirm the peak gain is less than the application value (1.4dBi)
3) The emission level is not getting worse.
   Measure the spurious, and confirm degradation of less than 3dB than spurious value of worst of report used for the application. However it is spurious defined below.

Please send those reports to Murata.

2. Notice

For OEM integration only – device cannot be sold to general public.
Therefore we will ask OEM to include the following statements required by FCC/IC on the product and in the Installation manual Notice.
Please describe the following warning on the final product which contains this module.

Contains Transmitter Module FCC ID:2AFGD-MUW1FX

or

Contains FCC ID:2AFGD-MUW1FX

●Please describe the following warning to the manual.

This device complies with part 15 of the FCC Rules. Operation is subject to the following two conditions: (1) This device may not cause harmful interference, and (2) this device must accept any interference received, including interference that may cause undesired operation.
FCC CAUTION Changes or modifications not expressly approved by the party responsible for compliance could void the user's authority to operate the equipment.
This transmitter must not be co-located or operated in conjunction with any other antenna or transmitter.

※When the product is small, as for these words mentioned above, the posting to a manual is possible.

Confidential to Cambridge Mobile Telematics

●When installing it in a mobile equipment. Please describe the following warning to the manual.

This equipment complies with FCC radiation exposure limits set forth for an uncontrolled environment and meets the FCC radio frequency (RF) Exposure Guidelines. This equipment should be installed and operated keeping the radiator at least 20cm or more away from person's body.

RF Exposure requirements are met when installed in mobile equipment.
This module cannot be installed in portable equipment without further testing and a change to FCC's grant of authorization.
Contact Murata regarding portable applications.

Note)
Portable equipment : Equipment for which the spaces between human body and antenna are used within 20cm.
Mobile equipment : Equipment used at position in which the spaces between human body and antenna exceeded 20cm.

This device is intended only for OEM integrators under the following conditions:
1)The antenna must be installed such that 20 cm is maintained between the antenna and users, and
2)The transmitter module may not be co-located with any other transmitter or antenna.
3)The use of an antenna with gain less than 1.4 dBi.

As long as 3 conditions above are met, further transmitter test will not be required. However, the OEM integrator is still responsible for testing their end-product for any additional compliance requirements required with this module installed

IMPORTANT NOTE: In the event that these conditions cannot be met (for example certain laptop configurations or co-location with another transmitter), then the FCC authorization is no longer considered valid and the FCC ID cannot be used on the final product. In these circumstances, the OEM integrator will be responsible for re-evaluating the end product (including the transmitter) and obtaining a separate FCC authorization.

End Product Labeling
This transmitter module is authorized only for use in device where the antenna may be installed such that 20 cm may be maintained between the antenna and users. The final end product must be labeled in a visible area with the following: "Contains FCC ID:XXXXXXXXXX". The grantee's FCC ID can be used only when all FCC compliance requirements are met.

Manual Information To the End User
The OEM integrator has to be aware not to provide information to the end user regarding how to install or remove this RF module in the user's manual of the end product which integrates this module.
The end user manual shall include all required regulatory information/warning as show in this manual.

Confidential to Cambridge Mobile Telematics