User Manual for APS2652S

Company Name: Altenergy Power System Inc.

Address: Building 2, No. 522, Yatai Road, Jiaxing, China 314050

User Manual for APS2652S

The model used ZigBee PRO protocol to send RF signals for device communication. The model can be used after pairing with a dedicated device which was installed with a receiver dongle.

APS2652S was used as a dongle which need to be installed in customer's device. It offers UART to communicate with customer's device according predefined protocol.

1:product figure

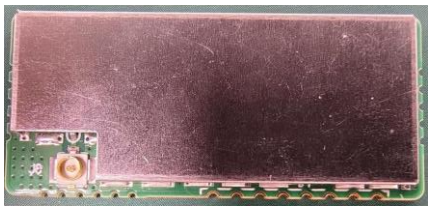

2:Technical specifications

RF operating frequency: 2405MHz ~ 2480MHz

Channel spacing: 5MHz

Channel wide：2MHz

Modulation method: OQPSK Communication rate: 250Kbps

Average operating current：<20mA

Operating voltage：2V-3.6V

Max receiving distance：>100M

Normal operating receiving distance： 100M

3. Pin Descriptions

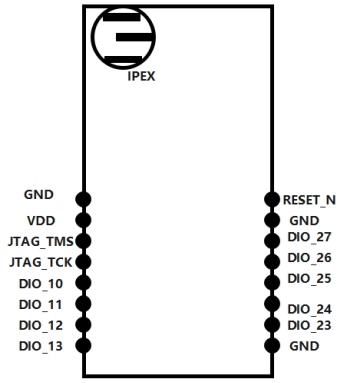

Pin name	Pin type	Description
	Digital I/O	GPIO
DIO11	Digital I/O	GPIO
DIO12	Digital or Analog I/O	GPIO analog capability
DIO13	Digital or Analog I/O	GPIO analog capability
DIO23	Digital or Analog I/O	GPIO analog capability
DIO24	Digital or Analog I/O	GPIO analog capability
DIO25	Digital or Analog I/O	GPIO analog capability
DIO26	Digital or Analog I/O	GPIO analog capability
DIO27	Digital or Analog I/O	GPIO analog capability
JTAG_TMS	Digital I/O	JTAG TMS, high-drive capability
JTAG_TCK	Digital	JTAG TCK
VDD	Power	2V-3.6-V digital power-supply
GND	Ground	Connect to GND
RESET_N	Digital input	Reset, active-low

4. Package Size

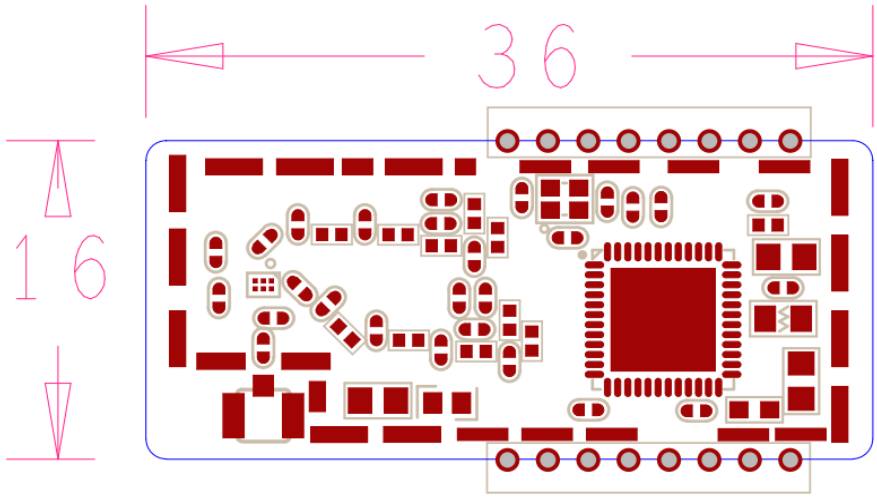

5.Caution

FCC:

Any Changes or modifications not expressly approved by the party responsible for compliance could void the user's authority to operate the equipment.

This device complies with part 15 of the FCC Rules. Operation is subject to the following two conditions:
(1) This device may not cause harmful interference, and
(2) This device must accept any interference received, including interference that may cause undesired operation.

Note: This equipment has been tested and found to comply with the limits for a Class B digital device, pursuant to part 15 of the FCC Rules. These limits are designed to provide reasonable protection against harmful interference in a residential installation. This equipment generates, uses and can radiate radio frequency energy and, if not installed and used in accordance with the instructions, may cause harmful interference to radio communications. However, there is no guarantee that interference will not occur in a particular installation. If this equipment does cause harmful interference to radio or television reception, which can be determined by turning the equipment off and on, the user is encouraged to try to correct the interference by one or more of the following measures:
—Reorient or relocate the receiving antenna.
—Increase the separation between the equipment and receiver.
—Connect the equipment into an outlet on a circuit different from that to which the receiver is connected.
—Consult the dealer or an experienced radio/TV technician for help.

RF Exposure Statement

This equipment complies with FCC radiation exposure limits set forth for an uncontrolled environment. This equipment should be installed and operated with minimum distance 20cm between the radiator and your body.

FCC Label Instructions

If using a permanently affixed label, the modular transmitter must be labeled with its own FCC identification number, and, if the FCC identification number is not visible when the module is installed inside another device, then the outside of the device into which the module is installed must also display a label referring to the enclosed module. This exterior label can use wording such as the following:
"Contains FCC ID: 2AFGR-APS2652S".
Any similar wording that expresses the same meaning may be used. The Grantee may either provide such a label, an example of which must be included in the application for equipment authorization, or, must provide adequate instructions along with the module which explain this requirement.

OEM Guidance

- **Applicable FCC rules**

This device complies with part 15.247 of the FCC Rules.

- **The specific operational use conditions**

This module can be used in IoT devices. The input voltage to the module is nominally 3.3 V DC. The operational ambient temperature of the module is -40 °C ~ 105 °C. the external antenna is allowed, such as monopole antenna.

- **Limited module procedures**

N/A

- **Trace antenna designs**

N/A

- **RF exposure considerations**

The equipment complies with FCC radiation exposure limits set forth for an uncontrolled environment. This equipment should be installed and operated with minimum distance 20cm between the radiator and your body. If the equipment built into a host as a portable usage, the additional RF exposure evaluation may be required as specified by 2.1093.

- **Antennas**

Antenna type: Monopole Antenna; Peak antenna gain : 3.26 dBi

- **Label and compliance information**

An exterior label on OEM's end product can use wording such as the following: "Contains Transmitter Module FCC ID: 2AFGR-APS2652S" or "Contains FCC ID: 2AFGR-APS2652S"

- **Information on test modes and additional testing requirements**

The modular transmitter has been fully tested by the module grantee on the required number of channels,modulation types, and modes, it should not be necessary for the host installer to re-test all the available transmitter modes or settings. It is recommended that the host product manufacturer, installing the modular transmitter,perform some investigative measurements to confirm that the resulting composite system does not exceed the spurious emissions limits or band edge limits (e.g., where a different antenna may be causing additional emissions).

The testing should check for emissions that may occur due to the intermixing of emissions with the other transmitters, digital circuitry, or due to physical properties of the host product (enclosure). This investigation is especially important when integrating multiple modular transmitters where the certification is based on testing each of them in a stand-alone configuration. It is important to note that host product manufacturers should not assume that because the modular transmitter is certified that they do not have any responsibility for final product compliance.

If the investigation indicates a compliance concern the host product manufacturer is obligated to mitigate the issue. Host products using a modular transmitter are subject to all the applicable individual technical rules as well as to the general conditions of operation in Sections 15.5, 15.15, and 15.29 to not cause interference. The operator of the host product will be obligated to stop operating the device until the interference have been corrected.

The final host / module combination need to be evaluated against the FCC Part 15B criteria for unintentional radiators in order to be properly authorized for operation as a Part 15 digital device.

- **Additional testing, Part 15 Sub part B disclaimer**

The host integrator installing this module into their product must ensure that the final composite product complies with the FCC requirements by a technical assessment or evaluation to the FCC rules, including the transmitter operation and should refer to guidance in KDB 996369. For host products with certified modular transmitter, the frequency range of investigation of the composite system is specified by rule in Sections 15.33(a)(1) through (a)(3), or the range applicable to the digital device, as shown in Section 15.33(b)(1), whichever is the higher frequency range of investigation.

When testing the host product, all the transmitters must be operating. The transmitters can be enabled by using publicly-available drivers and turned on, so the transmitters are active. In certain conditions it might be appropriate to use a technology-specific call box (test set) where accessory 50 devices or drivers are not available. When testing for emissions from the unintentional radiator, the transmitter shall be placed in the receive mode or idle mode, if possible. If receive mode only is not possible then, the radio shall be passive (preferred) and/ or active scanning. In these cases, this would need to enable activity on the communication BUS (i.e., PCIe, SDIO, USB) to ensure the unintentional radiator circuitry is enabled. Testing laboratories may need to add attenuation or filters depending on the signal strength of any active beacons (if applicable) from the enabled radio(s). See ANSI C63.4, ANSI C63.10 and ANSI for further general testing details.

The product under test is set into a link/association with a partnering device, as per the normal intended use of the product. To ease testing, the product under test is set to transmit at a high duty cycle, such as by sending a file or streaming some media content.

IC: ISED RSS Warning/ISED RF Exposure Statement

ISED RSS Warning:
This device complies with Innovation, Science and Economic Development Canada licence-exempt RSS standard(s). Operation is subject to the following two conditions: (1) this device may not cause interference, and (2) this device must accept any interference, including interference that may cause undesired operation of the device.

Le présent appareil est conforme aux CNR d'ISED applicables aux appareils radio exempts de licence.L'exploitation est autorisée aux deux conditions suivantes:
(1) l'appareil ne doit pas produire de brouillage, et
(2) l'utilisateur de l'appareil doit accepter tout brouillage radioélectrique subi, même si le brouillage est susceptible d'en compromettre le fonctionnement.

An exterior label on OEM's end product can use wording such as the following: "Contains Transmitter Module IC: 20481-APS2652S" or "Contains IC: 20481-APS2652S" L'étiquette externe sur le produit final OEM peut être rédigée comme suit: "contient le module émetteur IC:20481-APS2652S "ou "contient le module émetteur IC: 20481-APS2652S".

ISED RF exposure statement:
This equipment complies with ISED radiation exposure limits set forth for an uncontrolled environment. This equipment should be installed and operated with minimum distance 20cm between the radiator& your body.This transmitter must not be co-located or operating in conjunction with any other antenna or transmitter.
Le rayonnement de la classe b repecte ISED fixaient un environnement non contrôlés.Installation et mise en œuvre de ce matériel devrait avec échangeur distance minimale entre 20 cm ton corps.Lanceurs ou ne peuvent pas coexister cette antenne ou capteurs avec d'autres.

This radio transmitter IC: 20481-APS2652S has been approved by Innovation, Science and Economic Development Canada to operate with the antenna types listed below, with the maximum permissible gain indicated. Antenna types not included in this list that have a gain greater than the maximum gain indicated for any type listed are strictly prohibited for use with this device

End Product Labeling
The final end product must be labeled in a visible area with the following: Contains IC:20481-APS2652S .

Plaque signalétique du produit final
Le produit final doit être étiqueté dans un endroit visible avec l'inscription suivante: Contient des IC: 20481-APS2652S.

Manual Information to the End User
The OEM integrator has to be aware not to provide information to the end user regarding how to install or remove this RF module in the user's manual of the end product which integrates this module.
The end user manual shall include all required regulatory information/warning as show in this manual.

Manuel d'information à l'utilisateur final
L'intégrateur OEM doit être conscient de ne pas fournir des informations à l'utilisateur final quant à la façon d'installer ou de supprimer ce module RF dans le manuel de l'utilisateur du produit final qui intègre ce module.
Le manuel de l'utilisateur final doit inclure toutes les informations réglementaires requises et avertissements comme indiqué dans ce manuel.

This radio transmitter [IC:20481-APS2652S] has been approved by Innovation, Science and Economic Development Canada to operate with the antenna types listed below, It has an antenna with the maximum antenna gain is 3.26dBi.

Antenna type	Maximum Antenna gain
Monopole Antenna	3.26 dBi

Antenna types not included in this list that have a gain greater than the maximum gain indicated for any type listed are strictly prohibited for use with this device.

Cet émetteur radio [IC:20481-APS2652S] a été approuvé par Innovation, Science et développement économique Canada pour fonctionner avec les types d'antenne énumérés ci-dessous.
Il dispose d'une antenne avec une prise le gain maximum d'antenne est de3.26 dBi.

Antenna type	Maximum Antenna gain
Monopole Antenna	3.26 dBi

Les types d'antennes non inclus dans cette liste qui ont un gain supérieur au gain maximum indiqué pour tout type répertorié sont strictement interdits pour l'utilisation avec cet appareil.