Strap Sensor Fitment Instruction

Caution

- Any sensor maintenance or change working must be carried out by skilled person.
- Read through this instruction before sensor installation.
- Ensure the sensor arrow direction is on the same side of wheel valve.
- Pls Use the strap to fasten the sensor onto wheel

Strap Sensor Exploded View

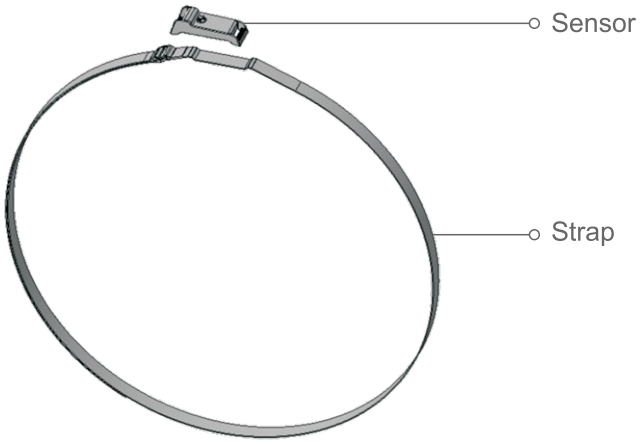

Strap Sensor Fitment Instruction

1.

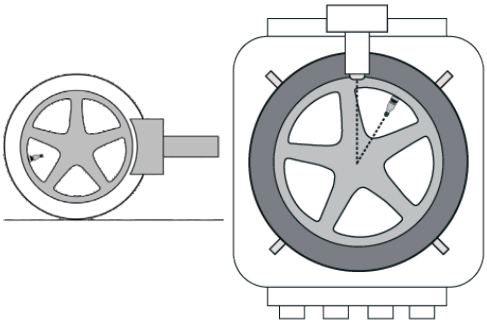

Break the tyre bead, ensuring the valve is on the opposite side of the wheel from the bead breaker blade. When the tyre is dismounted the valve must be located at 1 o'clock to the tyre fitting head.

2.

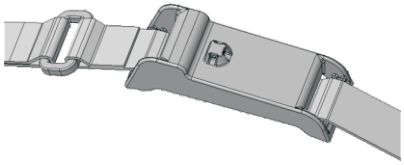

Wear the strap to sensor.

3.

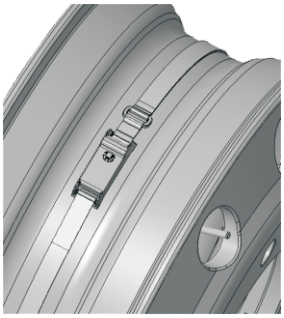

Place the sensor on bottom of wheel,ensuring arrow direction the same side of valve.

4.

Fasten sensor with strap by hand, make sure the sensor stunk on wheel.

5.

Press tire cover to wheel.

6.

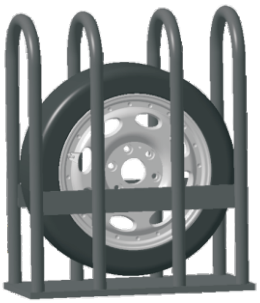

Take out tire and place it in cage.

7.

Inflate tire to placard pressure

FCC Warning

This device complies with part 15 of the FCC Rules. Operation is subject to the following two conditions: (1) This device may not cause harmful interference, and (2) this device must accept any interference received, including interference that may cause undesired operation.

Any Changes or modifications not expressly approved by the party responsible for compliance could void the user's authority to operate the equipment.

Note: This equipment has been tested and found to comply with the limits for a Class B digital device, pursuant to part 15 of the FCC Rules. These limits are designed to provide reasonable protection against harmful interference in a residential installation. This equipment generates uses and can radiate radio frequency energy and, if not installed and used in accordance with the instructions, may cause harmful interference to radio communications. However, there is no guarantee that interference will not occur in a particular installation. If this equipment does cause harmful interference to radio or television reception, which can be determined by turning the equipment off and on, the user is encouraged to try to correct the interference by one or more of the following measures:

-Reorient or relocate the receiving antenna.

-Increase the separation between the equipment and receiver.

-Connect the equipment into an outlet on a circuit different from that to which the receiver is connected.

-Consult the dealer or an experienced radio/TV technician for help.

The device has been evaluated to meet general RF exposure requirement. The device can be used in portable exposure condition without restriction.

ISED Warning

This device contains licence-exempt transmitter(s)/receiver(s) that complywith Innovation, Science and Economic Development Canada's licence-exempt RsS(s). Operation is subject to the following two conditions:

1. This device may not cause interference.
2. This device must accept any interference, including interference thatmay cause undesired operation ofthe device.

Cet appareil contient des émetteurs/récepteurs exemptés de licence qui sont conformes aux flux RsS exemptés de licence d’innovation, sciences et développement économique Canada. Le fonctionnement est soumis aux deux conditions suivantes:

1. Cet appareil ne peut pas causer d’interférences.
2. Ce dispositif doit accepter toute interférence, y compris celle qui peut provoquer un fonctionnement indésirable du dispositif.