VICTROLA™

3-IN-1 TURNTABLE

MODEL: VTA-71

Instruction Manual

PLEASE READ THIS INSTRUCTION MANUAL CAREFULLY
BEFORE USE AND KEEP IT FOR FUTURE REFERENCE.

CONTENTS

Safety Instructions.....1

Product Overview.....3

Setup/Basic Operation.....5

Listening to a Vinyl Record.....6

Listening to an External Audio Device (AUX Mode).....6

Listening to an External Audio Device (Bluetooth-In Mode).....7

Listening to the Vinyl Record from an External Device (Bluetooth-Out).....7

Maintenance/Proper Handling.....8

Troubleshooting Guide.....9

Specifications.....11

FCC Statement and other warnings.....12

CAUTION

RISK OF ELECTRIC SHOCK
DO NOT OPEN

AVERTISSEMENT:

RISQUE DE CHOC ÉLECTRIQUE- NE PAS OUVRIR.

- This lightning flash with arrowhead symbol within an equilateral triangle is intended to alert the user to the presence of non-insulated “dangerous voltage” within the product’s enclosure that may be of sufficient magnitude to constitute a risk of electric shock.
- **Warning:** To reduce the risk of electric shock, do not remove cover (or back) as there are no user-serviceable parts insides. Refer servicing to qualified personnel.
- The exclamation point within an equilateral triangle is intended to alert the user to the presence of important operating and maintenance instructions in the literature accompanying the appliance.

CAUTION: To reduce the risk of fire or electric shock, do not expose this appliance to rain or moisture.

WARNING: To prevent electric shock, do not use this (polarized) plug with an extension cord, receptacle or other outlet unless the blades can be fully inserted to prevent blade exposure.

SAFETY INSTRUCTIONS

1. Read these instructions - All the safety and operating instructions should be read before this product is operated.
2. Keep these instructions - The safety and operating instructions should be retained for future reference.
3. Heed all warnings - All warnings on the appliance and in the operating instructions should be adhered to.
4. Follow all instructions - All operating and use instructions should be followed.
5. Do not use this apparatus near water - The appliance should not be used near water or moisture - for example, in a wet basement or near a swimming pool, and the like.
6. Clean only with dry cloth.
7. Do not block any ventilation openings. Install in accordance with the manufacturer’s instructions.
8. Do not install near any heat sources such as radiations, heat registers, stoves, or other apparatus (including amplifiers) that produce heat.

9. Do not defeat the safety purpose of the polarized or grounding plug. A polarized plug has two blades with one wider than the other. A grounding plug has two blades and a third grounding prong. The wide blade or the third prong is provided for your safety. If the provided plug does not fit into your outlet, consult an electrician for replacement of the obsolete outlet.
10. Protect the power cord from being walked on or pinched particularly at the plugs, convenience receptacles, and at the point where they exit from the apparatus.
11. Only use attachments/accessories specified by the manufacturer.
12. Use only with the cart, stand, tripod, bracket, or table specified by the manufacturer, or sold with the apparatus. When a cart or rack is used, use caution when moving the cart/apparatus combination to avoid injury from tip-over.

13. Unplug the apparatus during lighting storms or when unused for long periods of time.
14. Refer all servicing to qualified personnel. Servicing is required when the apparatus has been damaged in any way, such as power supply cord or plug is damaged, liquid has been spilled or objects have fallen into the apparatus has been exposed to rain or moisture, does not operate normally, or has been dropped.
15. The mains plug is used as disconnect device, the disconnect device shall remain readily operable.
16. To reduce the risk of fire or electric shock, do not expose this apparatus to rain or moisture. The apparatus shall not be exposed to dripping or splashing and that no objects filled with liquids, such as vases, shall not be placed on apparatus.
17. Use the equipment in a moderate climate.

ACCESSORIES INCLUDED

- INSTRUCTION MANUAL
- WARRANTY(BACK OF MANUAL)
- POWER ADAPTOR

PRODUCT OVERVIEW

Front view

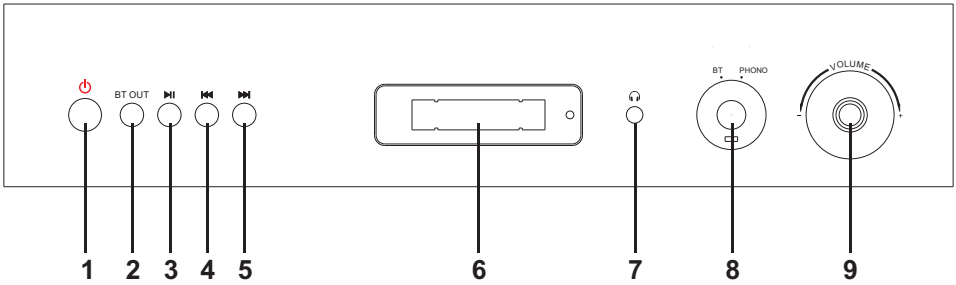

1. **POWER**: Press to turn the unit ON or OFF.
2. **BT OUT**: Press to activate the Bluetooth output function.
3. **PLAY/PAUSE** (▶II)
   Press to start playback, press again to pause.
   Long press the button for 3 seconds to disconnect the Bluetooth pairing.
   (**NOTE**: This button only works in Bluetooth mode.)
4. **PREVIOUS** (I◀◀)
   Skip to the previous track or station.
5. **NEXT** (▶▶I)
   Skip to the next track or station.
6. **Display Screen**
7. **3.5mm EARPHONE JACK**: Accepts headphone/earphone plugs.
8. **BT/PHONO/FM KNOB**: Turn to select BT/PHONO mode.
9. **VOLUME KNOB**: Turn to adjust volume.

Rear View

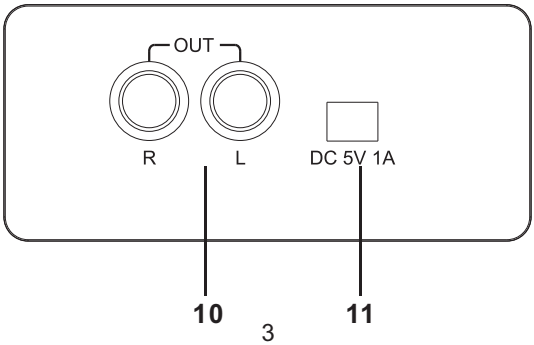

10. **LINE OUT jacks**
    For amplifier device with RCA auxiliary input sockets, insert the white and red plugs on the RCA cable into the unit. Insert the opposite end into the amplifier device. Be sure to connect the white plug to the white jack and the red plug to the red jack.
11. **DC Input Jack**
    Connect the power adapter to the jack to power on the unit.

Part of the Turntable

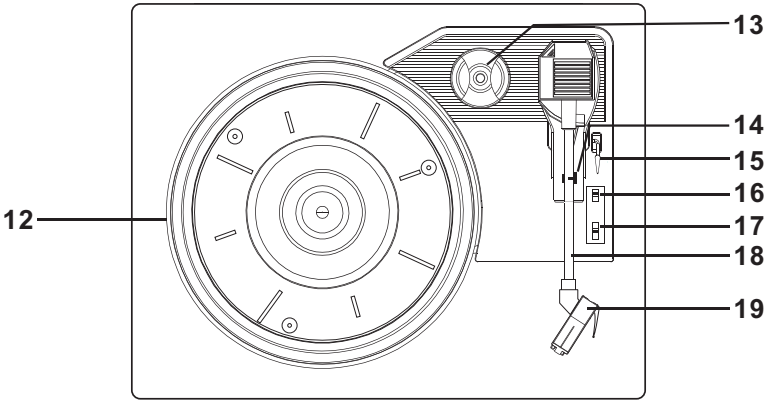

12. **Turntable**
13. **45 RPM adapter**
14. **Tone Arm holder**
15. **Cue Lever**: Before use, gently push the Tone Arm holder to the right to release the TONE ARM.
16. **AUTO STOP ON/OFF SWITCH**: Switch “ON”, the turntable will stop automatically when finish playing. Switch “ OFF”, the turntable will keep turning when finished playing.
17. **Speed Selector**
18. **Turn Arm**
19. **STYLUS**

SETUP/BASIC OPERATION

Setup

1. Remove white protective needle cover by gently pulling towards front of unit.
2. Remove any packaging materials from the unit.
3. Connect the power adapter to the DC Input jack to power on the unit.

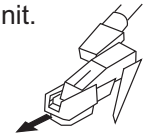

Note:

- It is strongly recommended that this product should be operated only from the type of power source indicated on the marking label.

Basic Operation

1. Press the POWER button to turn the unit on.
2. Select mode by turning the BT/PHONO KNOB.
3. Rotate the VOLUME KNOB to adjust to the desired sound level.

Listening through RCA LINE OUT

For amplifier device listening, first reduce the volume level to minimum. Insert the white and red plugs on the RCA cable into the unit, then insert the opposite end into the amplifier device. Be sure to connect the white plug to the white jack and the red plug to the red jack.

Listening through Earphones/Headphones (not included)

For private listening, first reduce the volume level to minimum. Insert your headphones' plug into the 3.5mm jack, then adjust the volume up by turning the VOLUME KNOB.

Note: The speakers will automatically be deactivated while headphones are plugged in.

CONDENSATION WARNING:

When the unit is moved from a cold or warm place, or is used following a sudden temperature change, there is the danger that water vapor in the air may condense on the unit, preventing proper operation. In such cases, leave the unit for 1-2 hours after plugging it into an AC outlet to allow it to stabilize at the temperature of its surroundings.

LISTENING TO A VINYL RECORD

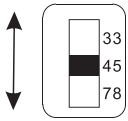

1. Turn the unit ON by pressing the POWER button.
2. Turn the BT/PHONO KNOB to enter the PHONO mode.
3. Gently open the dust cover.
4. Put the record on the turntable. Select the speed. When playing a 45 RPM record, use the included 45 adaptor.
5. Gently push the Tone Arm Holder to the right to release the TONE ARM.
6. Raise the Cue Lever to lift the TONE ARM off the tone arm support.
7. Move the TONE ARM gently to the edge of the record (or the starting point of the track). The turntable will begin to turn.
8. Gently lower the TONE ARM by slowly releasing the CUE LEVER.
   You can lower the TONE ARM manually if the CUE LEVER has not been raised.
9. Turn the VOLUME KNOB to adjust the volume.
10. When playback has finished, slightly lift the tone arm using the CUE LEVER and return it to the TONE ARM holder.

LISTENING TO AN EXTERNAL DEVICE (AUX MODE)

LINE-OUT Jacks on the BACK of the unit:
If you play this device through external powered speakers, you can connect the unit with an RCA component cable (not Included). Make sure to connect the white plug to white jack (left) and the red plug to the red jack (right).

LISTENING TO AN EXTERNAL DEVICE (BLUTOOTH-IN MODE)

In BT (Bluetooth) mode, this unit can play music from external devices which have a built-in Bluetooth feature.

GETTING CONNECTED USING BLUETOOTH (BT RECEIVE-IN)

1. Turn the BT/PHONO KNOB to select BT mode.
2. The “bt” will flash on the Display Screen.
3. Turn ON the Bluetooth function on your external device.

NOTE: *The effective distance between your external device and this unit is 10 meters (33ft).*

4. Wait for the “ **The Victrola Eastwood** " to appear on the paired devices list of your external device and press “ **The Victrola Eastwood** ".
5. A few seconds later your Bluetooth connection is successful and the “bt” on the Display Screen will stop flashing.
6. Select the music media files on your external device, then press the PLAY/PAUSE button (▶II) to begin playback.
7. To temporarily pause playback, press the PLAY/PAUSE button (▶II) when playback. Press again to resume.
8. To skip to the previous or the next tracks, press the PREVIOUS/NEXT button (I◀◀ or ▶▶I) to listen.

Note: Stop, fast forward/rewind are only available on your external device.

LISTENING THE VINYL RECORD FROM AN EXTERNAL DEVICE (BLUTOOTH-OUT)

Bluetooth transmit out to connect external BT speakers, you can enjoy the vinyl records in HI-FI system wirelessly.

1. When playing a vinyl record, press the BT OUT button.
2. The “ ᛒ " icon flashes on the Display Screen.
3. Turn ON your external BT speaker and switch to BT mode.
4. Wait for a few seconds, they make connection to each other automatically.
5. The “ ᛒ " icon stops flashing once successful paired.
6. Control the playback from your BT speaker.

MAINTENANCE/PROPER HANDLING

Handling Vinyl Records

- Do not touch the record's grooves. Only handle records by the edges or the label with clean hands. Touching the record surface will cause your record's quality to deteriorate.
- To clean a record, use a soft anti-static cloth to gently wipe the record surface.
- Keep records in their protective sleeves when not in use.
- Always store records upright on their edges.
- Avoid placing records in direct sunlight, close to a heat source (radiators, stoves, etc.), or in a location subject to vibration, excessive dust, heat, cold or moisture.

How to Replace the Turntable Stylus ***(Replacement Needle# ITNP-S1)***

The stylus should last about 50 hours under normal use. However, it is recommenced that the stylus be replaced as soon as you notice a change in sound quality. Prolonged use of a worn-out stylus may damage the record. The highest speed of 78 RPM records would wear out the stylus more quickly.

Removing the Stylus from the Cartridge

1. Set a screwdriver at the tip of the stylus and push down to the direction "**A**".
   WARNING: When applying force to stylus, too much may damage or break the stylus.
2. Pull the stylus out toward the direction "**B**".

Installing the Stylus

1. Hold the tip of the stylus and insert the other edge by pressing toward direction "**C**".
2. Push the stylus up toward direction "**D**" until it locks at the tip.

Caution:

- *Do not remove or bend the stylus needle.*
- *Don not touch the needle to avoid injury to your hand.*
- *Turn off the unit's power before you replace the stylus.*
- *Keep out of reach of children.*

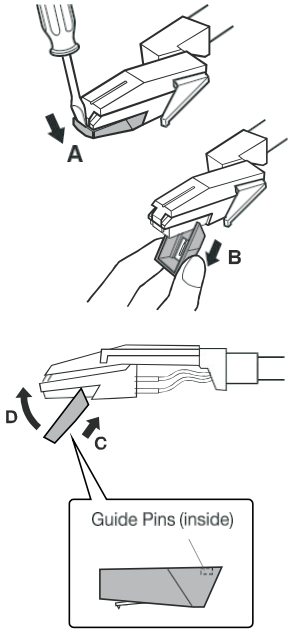

TROUBLESHOOTING GUIDE

	Symptom	Possible Cause	Solution
GENERAL	• Unit will not power on	• Unit is unplugged.	• Connect the DC power adapter to the jack.
	• No sound output from speakers	• The volume level is set too low. • The input selector does not match the playback source.	• Adjust the volume. • Select the correct input source.
	• Noise/Distortion in sound output	• The unit is too close to a TV set or another Interfering device.	• Turn off the TV or other appliance, and relocate the unit.
	• Unit fails to respond	• It might result from external factors sucn as ESD (Electro-static discharge).	• Disconnect the power cord and external audio device. Re-plug the power cord after one minute.
PHONO	• Decline in turntable audio performance	• The turntable stylus is worn out.	• Replace the stylus.

	Symptom	Possible Cause	Solution
BLUETOOTH	• No sound	• The unit is not switched to Bluetooth mode. • Your device's and/or your unit's volume is not turn up. • Your device is too far from the unit or there're some obstacle between your device and your unit.	• Ensure the unit is switched to BT mode. • Move your Bluetooth device closer to unit. • Turn up the volume on your portable device and/or the unit. • Turn OFF your Bluetooth device and unit. Then power them both back ON.
	• Sound has a lot of static	• Your device is too far away.	• Bring your device closer to the turntable.
	• Unable to pair with a Bluetooth device	• Your device doesn't have Bluetooth connectivity. • The Bluetooth pairing is not successful	• Confirm that your device is Bluetooth compatible. • Re-pair the unit and device again.
BLUETOOTH-OUT	• The connection takes too long	• The time of connection depends on the connecting device	• Wait for a moment

For further assistance with your product, call Innovative Technology at
TOLL FREE# 1-877-ITECH-97 (1-877-483-2497).

Please note: As a result of continual improvements, the design and specifications of this product are subject to change without notice.

Made in China.

Bluetooth is a registered trademark of Bluetooth SIG, Inc.
Other trademarks and trade names are those of their respective owners.

SPECIFICATIONS

GENERAL

Power adapter ---------- DC 5V/1A
Power Consumption ---------- 5W
Power Output ---------- 2 x 2W
Size ---------- 12.7''(322mm)W x12.3''(312mm)D x 5.2''(131mm)H
Weight ---------- 4.5 lbs (2kg)

RECORD PLAYER

Speeds ---------- 33-1/3 RPM, 45 RPM and 78 RPM

BLUETOOTH

Bluetooth Version ---------- V4.0
Bluetooth Profiles ---------- A2DP, AVRCP
Bluetooth Frequency range ------ 2.402GHz - 2.480GHz
Operating Distance ---------- 10 meters (33 ft.)

FCC Statement

1.This device complies with Part 15 of the FCC Rules. Operation is subject to the following two conditions:

(1)This device may not cause harmful interference, and

(2) this device must accept any interference received, including interference that may cause undesired operation.

2.Changes or modifications to this unit not expressly approved by the party responsible for compliance could void the user authority to operate the equipment.

NOTE: This equipment has been tested and found to comply with the limits for Class B digital device, pursuant to part 15 of the FCC Rules. These limits are designed to provide reasonable protection against harmful interference in a residential installation.
This equipment generates, uses and can radiate radio frequency energy and, if not installed and used in accordance with the instructions, may cause harmful interference to radio communications. However, there is no guarantee that interference will not occur in a particular installation. If this equipment does cause harmful interference to radio or television reception, which can be determined by turning the equipment off and on, the user is encouraged to try to correct the interference by one or more of the following measures:

- Reorient or relocate the receiving antenna.
- Increase the separation between the equipment and the receiver.
- Connect the equipment into an outlet on a circuit different from that to which the receiver is connected.
- Consult the dealer or an experience radio/TV technician for help.

CALIFORNIA PROP 65 WARNING

WARNING: This product can expose you to chemicals including lead, which is known to the State of California to cause cancer and birth defects or other reproductive harm. For more information go to www.P65Warnings.ca.gov.

IC WARNING

- English:

This device contains licence-exempt transmitter(s)/receiver(s) that comply with Innovation, Science and Economic Development Canada's licence-exempt RSS(s). Operation is subject to the following two conditions:

(1) This device may not cause interference; and
(2) This device must accept any interference, including interference that may cause undesired operation of the device.

This equipment complies with FCC and IC radiation exposure limits set forth for an uncontrolled environment. This equipment should be installed and operated with minimum distance 20cm between the radiator & your body.

- French:

Cet appareil contient des é metteurs / ré cepteurs exempté s de licence conformes aux RSS (RSS) d'Innovation, Sciences et Dé veloppement é conomique Canada. L'exploitation est autorisé e aux deux conditions suivantes :

(1) l'appareil ne doit pas produire de brouillage, et
(2) l'utilisateur de l'appareil doit accepter tout brouillage radio é lectrique subi, mê me si le brouillage est susceptible d'en compromettre le fonctionnement."

Cet appareil est conforme à FCC et IC l' exposition aux rayonnements limites fixé es pour un environnement non contr?lé . Cet appareil doit ê tre installé et utilisé avec une distance minimale de 20 cm entre le radiateur et votre corps. Cet transmetteur ne doit pas ê tre co-situé ou opé rant en liaison avec toute autre antenne ou transmetteur.

Innovative Technology Electronics LLC.
Limited Warranty: 90 Days Labor, One Year Parts

Innovative Technology Electronics LLC. (IT) warrants the product to be free from “Defects” in materials under normal use for a period of “One Year” from the date of the original purchase. The Warranty is “Not” transferable. IT agrees, within the initial “90 Day” period, to repair or replace the product if it is determined to be defective at “No Charge”. It is further agreed that IT will cover the cost to repair or replace damaged “Parts” only for a total period of “One Year” from the date of the original purchase. The warranty does not cover cosmetic damage, antennas, AC cords, cabinets, headbands, ear-pads, or damage due to line power surges, connection to improper voltage supply or settings, misuse, mishandling, accident, acts of God or attempted repair by an unauthorized service agent. **To obtain service, the purchaser MUST present an original sales receipt / proof of purchase. Please contact us at www.victrola.com to request an RMA (Return Material Authorization) number to return products for service or replacement.** Returns without an RMA number on the package will be refused and returned to sender. Upon receipt of the returning item and our full inspection (IT) may issue a replacement to customer for the same item or of one that has equivalent value and features. To return an item, supply full name, return address, phone number, item purchased, receipt of purchase and reason for return to obtain RMA number.

All returns must be in the original packaging or reasonable substitute to prevent damage.
Customer “Must” include full name, shipping address and telephone number inside of package. No return will be shipped back to a PO Box or APO address.
Please include your check or money order in the amount of

- **USD $5.00 for items $10.00 to $39.99 (Price Paid Per Unit)**
- **USD $10.00 for items $40.00 to $99.99 (Price Paid Per Unit)**
- **USD $16.00 for items $100.00 and up (Price Paid Per Unit)**
- **Shipping fees are non-refundable**

to be payable to Innovative Technology Electronics LLC. (for handling and return shipping charge) (IT) will not be responsible for delays or unprocessed claims resulting from a purchaser’s failure to provide any / all of the necessary information.
Send all inquiries or RMA request via our website www.victrola.com/pages/technical-support.

Innovative Technology Electronics LLC.
1 Channel Drive, Port Washington, NY 11050
Toll free: 1-877-483-2497
Website for support: www.victrola.com/pages/technical-support

There are no express warranties except as listed above.
REPAIR OR REPLACEMENT AS PROVIDED UNDER THIS WARRANTY IS THE EXCLUSIVE REMEDY OF THE CUSTOMER, (IT) SHALL NOT BE LIABLE FOR ANY INCIDENTAL OR CONSEQUENTIAL DAMAGES FOR BREACH OF ANY EXPRESS OR IMPLIED WARRANTY ON THIS PRODUCT EXCEPT TO THE EXTENT PROHIBITED BY APPLICABLE LAW. ANY IMPLIED WARRANTY OF MERCHANTABILITY OR FITNESS FOR A PARTICULAR PURPOSE ON THIS PRODUCT IS LIMITED IN DURATION TO THE DURATION OF THIS WARRANTY.

Some states do not allow the exclusion or limitation of incidental or consequential damages or limitations on how long an implied warranty lasts, so the above exclusions or limitations may not apply to you. This warranty gives you specific legal rights and you may also have other rights, which vary from state to state.