YI PIXIE

Disclaimer and user manual
Product name:YI Pixie Drone
Model name:YFS.F318

yitechnology.com

Table of Contents

- Suggested use 3
- Product overview 3
- Brief introduction 3
- Names of main devices 4
- Preflight preparation 4
- Battery charging and installation 4
- Battery charging 4
- Battery installation and removal 5
- Install batteries 5
- Remove batteries 5
- Yi Pilot APP download 6
- Preflight check 6
- First flight experience 6
- Requirements for flight environment 6
- List of LED indicators' indications 7
- Start-up and shutdown 8
- Start-up 8
- Shutdown 8
- Standby 8
- Connect with the YI Pixie drone 8
- Release and hover 9
- Take back the YI Pixie drone 10
- Low battery 10
- Manipulate the YI Pixie drone 11
- Manual mode 11
- Motion sensing mode 12
- Camera angle 12
- Introduction to APP functions 13

yitechnology.com

◆Parameter settings 13
◆Picture shooting 14
◆Time-lapse shooting 14
◆Burst mode 14
◆Video shooting 14
◆Fixed point surrounding 14
◆Face follow 15
◆File management 15
◆Multimedia library 15

APP setting of YI Pixie drone 16

◆Silent shooting 16
◆Head orientation 16
◆Face follow 16
◆Testing upgrade 16

WIFI information Modification 16

◆DRONE calibration 17
◆Remaining capacity 17
◆Product manual 17
◆About 17
◆User information 17
◆Flight route 17
◆ Main camera angle adjustment 17

Repair and maintenance 18

◆ Remove and change the propeller 18
◆Storage & transportation 19
◆Transportation 19
◆Battery storage 19
◆Battery disposal 20
◆Firmware upgrade 20

After-sale warranty information 21

◆Disclaimer & Warning 22
◆Product Warranty Card 23

yitechnology.com

Suggested use

Yi technology provides the following file data for YI Pixie drone users :

1. 《Packing List》
2. 《Disclaimer & Safe Operation Manual》
3. 《Quick Start Guide》

《Disclaimer & Safe Operation Manual 》includes the information on usage, safety, maintenance, etc., which shall be read carefully before using the product. Please carefully read 《Disclaimer & Safe Operation Manual 》and 《Quick Start Guide》, and ensure that you have understood and agreed on all the clauses and precautions in them. Please log in the official website to get the latest version of the data mentioned above.

Product overview

Brief introduction

YI Pixie drone is the world's leading artificial intelligence small drone for aerial picturegraphy, which is safe, portable and easy to use. The total weight of Follow is about 300g (including the battery), and it can shoot pictures of 13 mega-pixel and high-quality videos of 4k resolution, which also has the functions of face follow surrounding, one-key taking off/landing/returning, etc.

Through the "Yi Pilot" installed on the mobile device, the user can easily manipulate YI Pixie drone, enjoying unprecedented experience and fun of manipulation.

yitechnology.com

Names of main devices

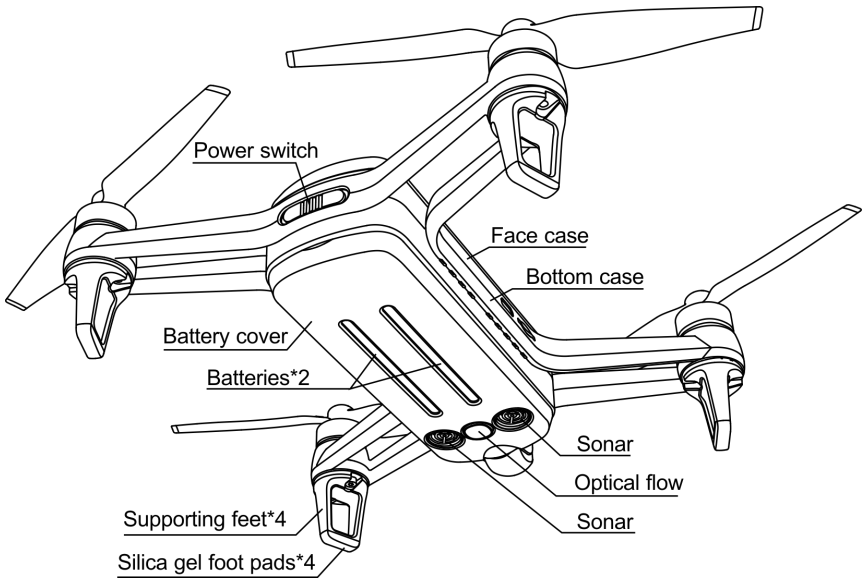

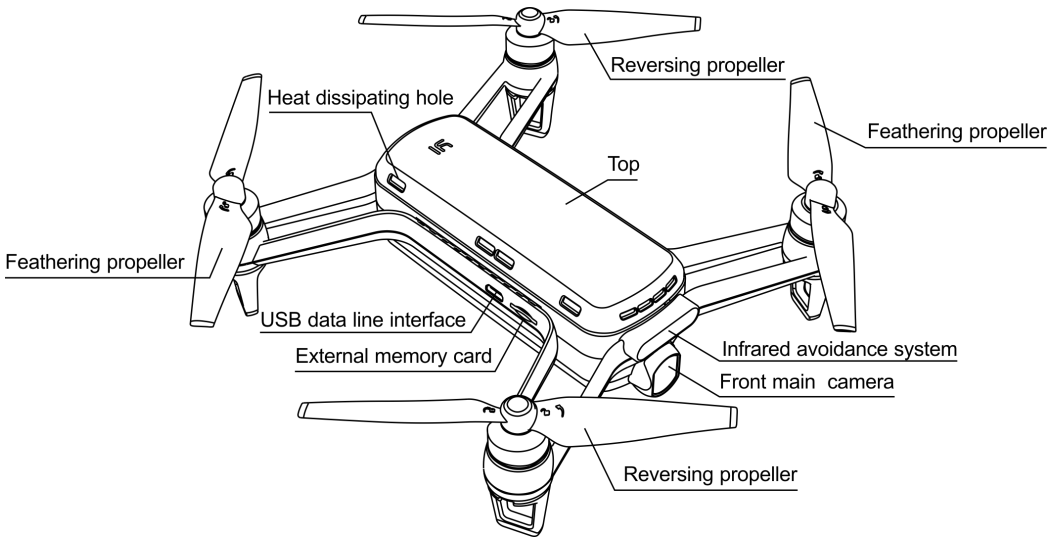

Preflight preparation

Battery charging and installation

Battery charging

Put the battery on the charger, and make the battery fully contact the interface of the charging stand.

yitechnology.com

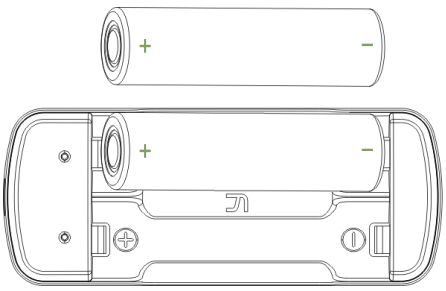

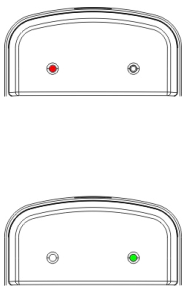

Red indicator normally on:
The battery voltage is lower than 4.2V

Green indicator normally on:
the battery is fully charged

Note:
*When it is unused for a long time, the battery may suffer the over discharge, which will lead to the failure of charging and utilization. Therefore, it's necessary to charge the battery regularly to maintain the cell's activity, and to use, charge, transport and store the battery in accordance with relevant requirements in the Battery Safety Operation Manual.
*When the charger detects that the battery temperature exceeds the normal working range, it will stop charging and proceed when the temperature drops to a normal value. During this process, the power indicator shall always display as the state of under charging, which means that the red indicator is normally on.
* In case of finding damage on the battery appearance, please do not use it

Battery installation and removal

Install batteries
Put your strength on your fingers to dig the battery cover and open the rear cover.
Press the battery into the battery position of Follow, with positive and negative electrodes aligned.

Remove batteries
Put your strength on your fingers to dig the battery cover and open the rear cover.
Carving one side of the battery and pressing slightly inwards, then pulling upwards, the battery can be removed.

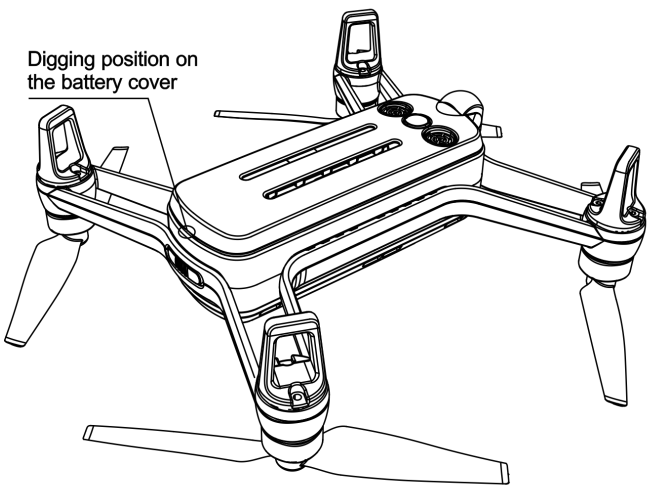

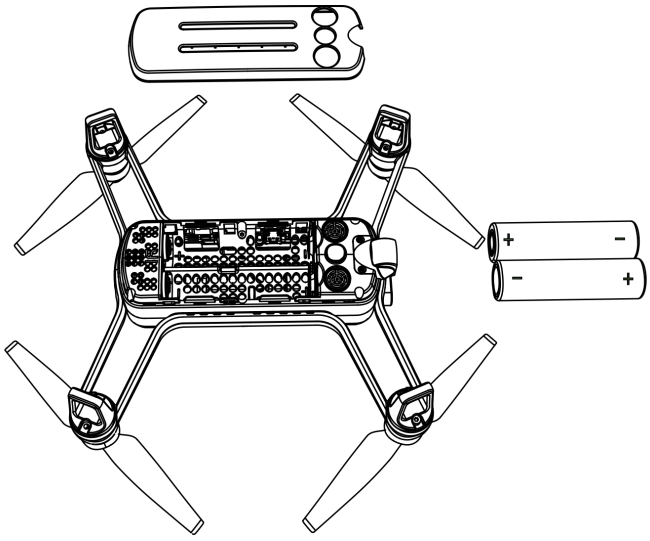

yitechnology.com

Yi Pilot APP download

Please ask YI technology for the newest Yi Pilot APP version. Mobile operating system versions available for Yi Pilot APP: iOS 9.0 or above; Andoid 4.4.0 or above.

Preflight check

Guarantee the following points before conducting a trial flight :

- Maintain the mobile device to be connected to the Internet and activate the mobile phone wifi, thus to guarantee that the DRONE can be correctly switched to the local allowable Wi-Fi brand.
- The battery is fully charged and correctly installed; all the components work normally.
- The electric quantity of your mobile device used to manipulate the DRONE is sufficient.
- Environment and weather conditions are good enough for the flight.
- Be far away from the crowded area.

First flight experience

Requirements for flight environment

The YI Pixie drone can be used indoors with calm air condition, or outdoors with the wind velocity below wind speed of 10Km/h.
In order to achieve the high quality of videos and pictures shot, it's better to perform the shooting in the environment with calm wind and sufficient light, and guarantee that there is no obstacle to affect the flight or block the operator's sight.
Please conduct the flight of the YI Pixie drone in the environment with the temperature of 5℃-40℃ and the altitude lower than 3000m.
Please conduct the flight in local legal areas.
Please make sure that the flight area is spacious and bright; don't make the DRONE fly beyond the remote control range (It is suggested that the largest operating distance is shorter than 100, which is determined based on the flight environment.)

yitechnology.com

Don't use YI Pixie drone in the crowded area.
Don't use YI Pixie drone in the areas with no-fly signs or around buildings.
Don't conduct the flight under bad weather, such as rain, snow, fog, haze, thunder, lightning, strong wind (wind velocity above Category 3), hail, dust storm, etc.
Don't use this product under such environment as strong magnetic field, etc.
Since the YI Pixie drone uses optical flow and sonar sensor to conduct positioning, carefully use the Follow DRONE under the following environments:

- The scene which is too dark or too bright
- The scene with drastic and rapid changes of light

Prevent it from flying on the surface with the following characteristics:

- Ground with pure color
- Surface with strong reflection, such as water surface or the surface of the transparent and reflective object
- Surface of the moving object
- Surface of the material which has strong absorption of sound waves
- Surface with a very high texture multiplicity
- Surface of the object whose inclination exceeds 30º
- Area covered by snow

*For more detailed precautions and safety operation instructions, please refer to the Disclaimer and Safety Operation Manual.

List of LED indicators' indications

The following table shows the state of the indicator light and its corresponding implication.

Indicator	Color & status	Representative meaning
Power supply indicator	White normally on	All scenes other than firmware upgrade
	White flashing	During firmware upgrade
LED indicator	Yellow indicator blinks	Normally start upon startup, before the system self-check
	Green normally on	Normal status
	White normally on	During the flight process
	Blue indicator blinks	Low battery alarming & during firmware upgrade
	Red indicator blinks	Abnormal status

Note:
The blue light will flash for one time upon startup, which cannot be changed.
During the period from startup to the completion of self-check, the light is not on, time of which is about 10-15s.
After the completion of self-check, if the mobile phone Wi-Fi doesn't connect to the DRONE, the yellow light flashes. Only all flight conditions are met, the green light is normally on.
During the flight process, if Wi-Fi is disconnected, the indicator light turns yellow flashing.

Start-up and shutdown

Start-up
Put the DRONE right side up, toggle the switch to "ON" until the LED indicator on top of the front camera flashes several times to let the Follow enter the start-up self-inspection. After about 20 seconds, when the electrical tune rings and the start-up self-inspection is completed, put the YI Pixie drone on the level ground to wait for the DRONE's electrical tune ringing again, following which the DRONE enters the preparation state for flight.
Shutdown
Under the standby state, turn the switch to "OFF" status until the LED power indicator on top of the front camera is off.

Note:
* After the start-up, the YI Pixie drone will conduct the self-inspection; if there is a fault, after the self-inspection, the DRONE electric toning will not ring out which means that the self-inspection fails. You can try to restart the YI Pixie drone.
Don't try repeatedly; if the fault still exists, please contact the customer service.

Standby

When the YI Pixie drone is in the flight preparation state, the LED indicator on top of the front camera is green, which means that it can be released to fly at any time.

Connect with the YI Pixie drone

The YI Pixie drone is connected to the mobile device through Wi-Fi. Please connect the mobile device to the Wi-Fi of the YI Pixie drone in accordance with the following steps:

1.Confirm that the YI Pixie drone is started and in the normal standby state;
2.Enter the mobile device's Wi-Fi setting interface;
3.On the mobile device's Wi-Fi setting interface, the Wi-Fi of the YI Pixie drone is initially displayed as "Follow XXXXXX", where in, the "XXXXXX" is the unique No. of each machine;

4.Click to select it and input the correct password (the initial password is "12345678" by default).

5.Then, you can set a new Wi-Fi password through APP - "set" - "modify Wi-Fi information" in the APP

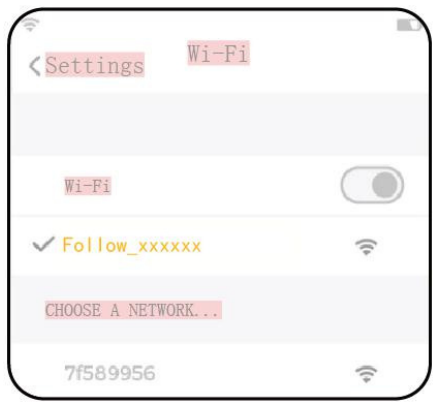

*If there are several users trying to connect the YI Pixie drone, only the first user successfully connecting the
DRONE can own the operating authorization of the YI Pixie drone.

Release and hover

Under the standby state, put the YI Pixie drone on the level ground, click the "One-key take-off" icon at the remote control terminal, and confirm it, following which the propeller will start to rotate and accelerate, and the YI Pixie drone will automatically fly 1.2 meter high from the ground and hover in the air.

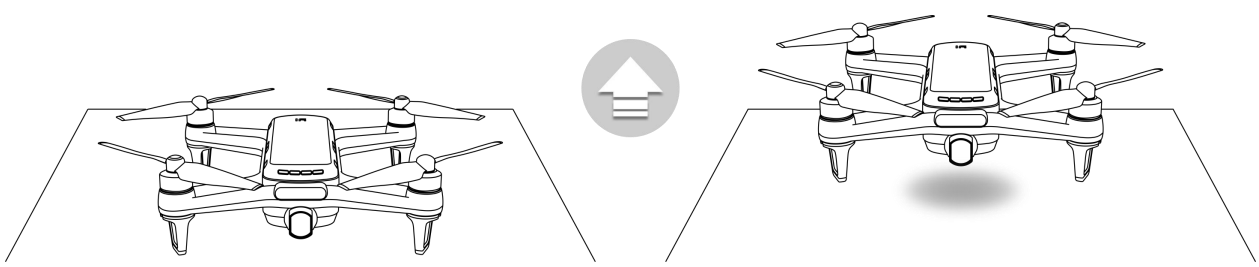

Note:
*When it takes off, don't cover the camera and sonar sensor at its bottom

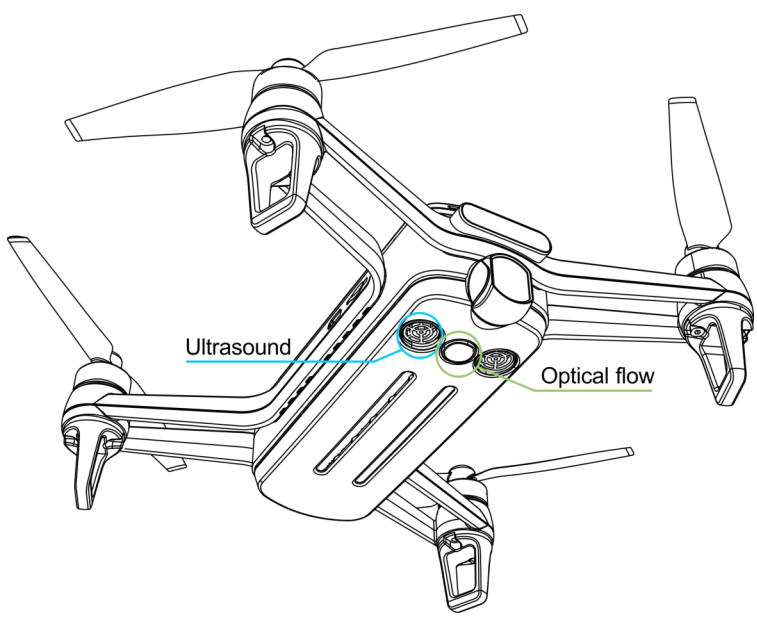

yitechnology.com

Take back the YI Pixie drone

There are two ways to take back the YI Pixie drone :

1. Manipulate the YI Pixie drone in front of you, press the "One-key land" icon, following which the DRONE will slowly go down, and enter the standby state after it lands on the ground, with the propeller gradually stopping the rotating.

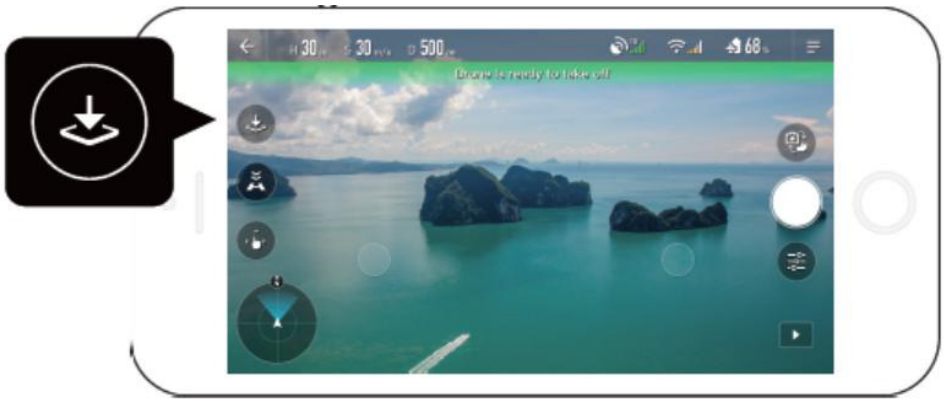

2. Manipulate the YI Pixie drone to the environment available for safe landing, and click the "One-key return" icon on the APP control interface, following which the YI Pixie drone will slowly go down to the ground.

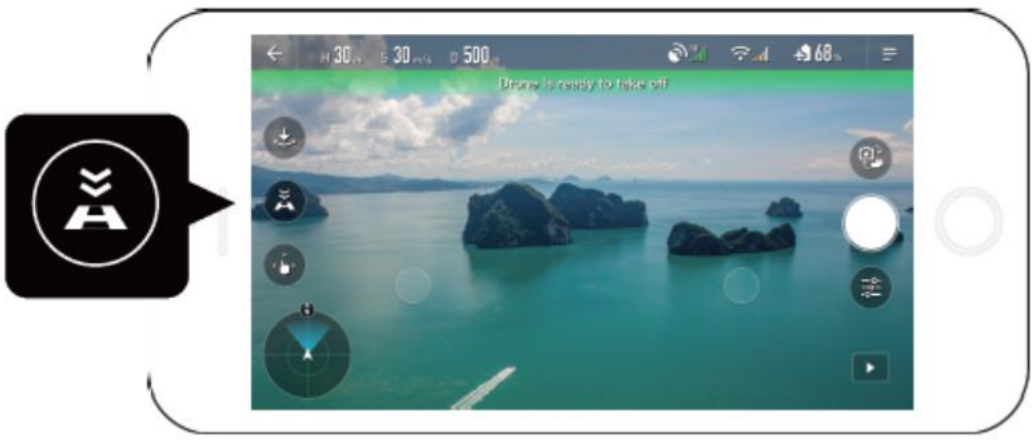

Note:
*Pay attention to the ground condition when it goes down.

Low battery

Battery level	When the battery level is less than 20%	When the level is less than 10%
Display on the APP status bar	Low power, please land safely as soon as possible	DRONE force-land
The YI Pixie drone's motion	Flight as usual But the user should take the DRONE back timely at that time.	Force-land Hover for 1m height to the ground

yitechnology.com

Manipulate YI Pixie drone

Click "One-key take-off" on the main page of "Yi Pilot" APP to enter the operation interface. The ▲ in the top right corner can be selected to switch the manipulation mode, and "Yi Pilot" App provides two manipulation modes. It is "Stick mode" for the first manipulation, and your choice for the last time will be recorded.

Manual mode

Manipulate the YI Pixie drone through the virtual joystick.

- Turn the left rocker to control the DRONE rising / descending; move in the horizontal direction to control horizontal rotation of the DRONE.
- The right joystick controls the flight direction.
  - o Push the right joystick up - the DRONE will fly in the direction of its head;
  - o Push the right joystick down - the DRONE will fly in the direction of its tail;
  - o Push the right joystick left - the DRONE will fly to its left side;
  - o Push the right joystick left - the DRONE will fly to its right side.

Note:
When selecting the camera to be inwards in the APP, the left rocker will be pushed upwards, and the
DRONE flights in the tail direction. Drop-down the right rocker, the DRONE flights in the camera
direction.

Motion sensing mode

Manipulate the YI Pixie drone through the virtual push-pull rod/the motion sensing key on the screen's left/right side respectively.

- The virtual push-pull rod on the left side controls the DRONE to go up/down.
- Constantly press the motion sensing key on the right side with your right thumb to control the flight direction:
  - o Incline the mobile device in the direction far away from your body -the DRONE flights in the tail direction;
  - o Incline the mobile device in the direction towards your body –the DRONE flights in the nose direction;
  - o Incline the mobile device towards left - the DRONE will fly to its left;
  - o Incline the mobile device towards right - the DRONE will fly to its right;

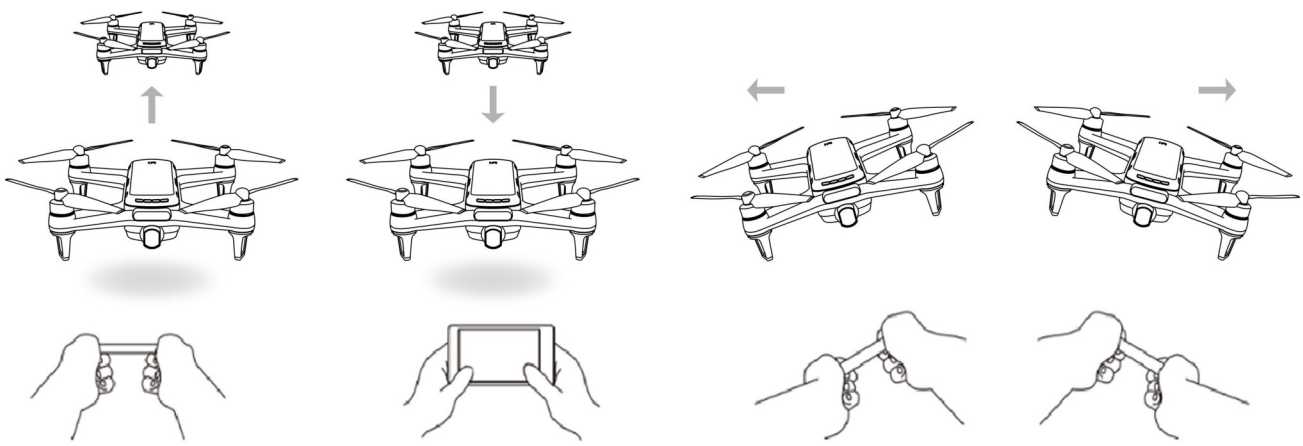

Note:
*The above-mentioned operation method is: "The head inward" mode, and if the user selects the "The
head outward" mode, the operation direction will be reversed.

Camera angle

The camera angle of the YI Pixie drone can be changed through manual adjustment.

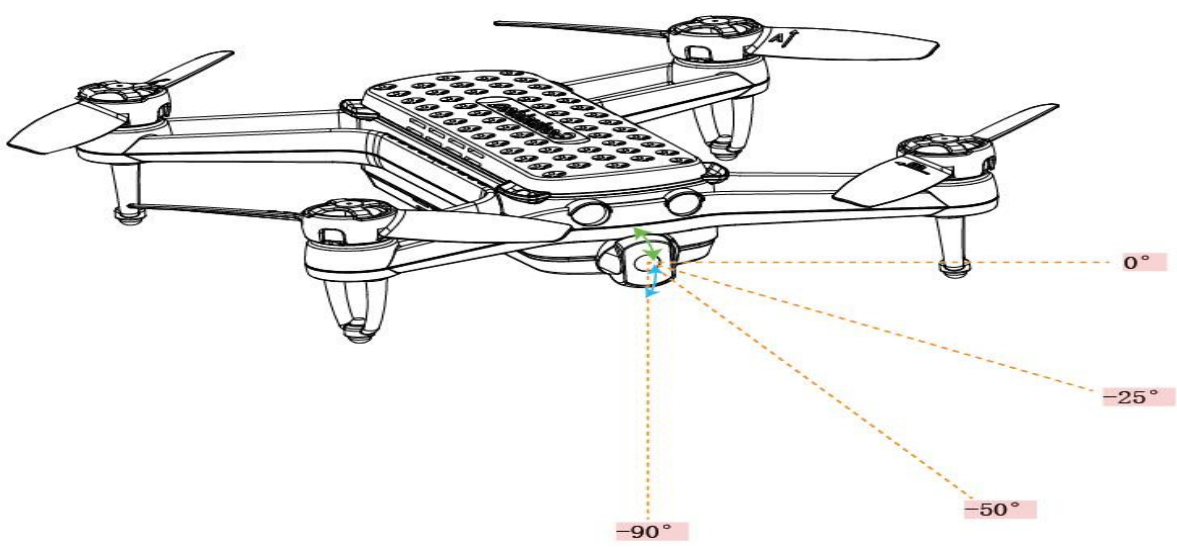

yitechnology.com

Introduction to APP functions

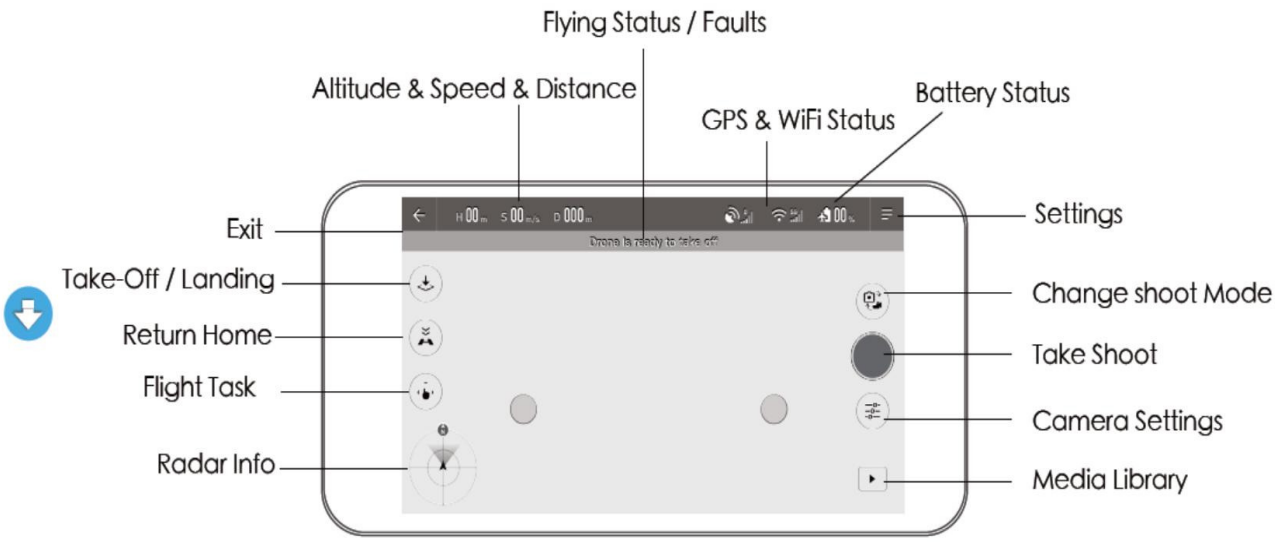

Parameter settings

The camera's setting functions are as follows in sequence :

1.Manual Adjustment；　　2.ISO Adjustment；
3.White Balance；　　4.Video Size；

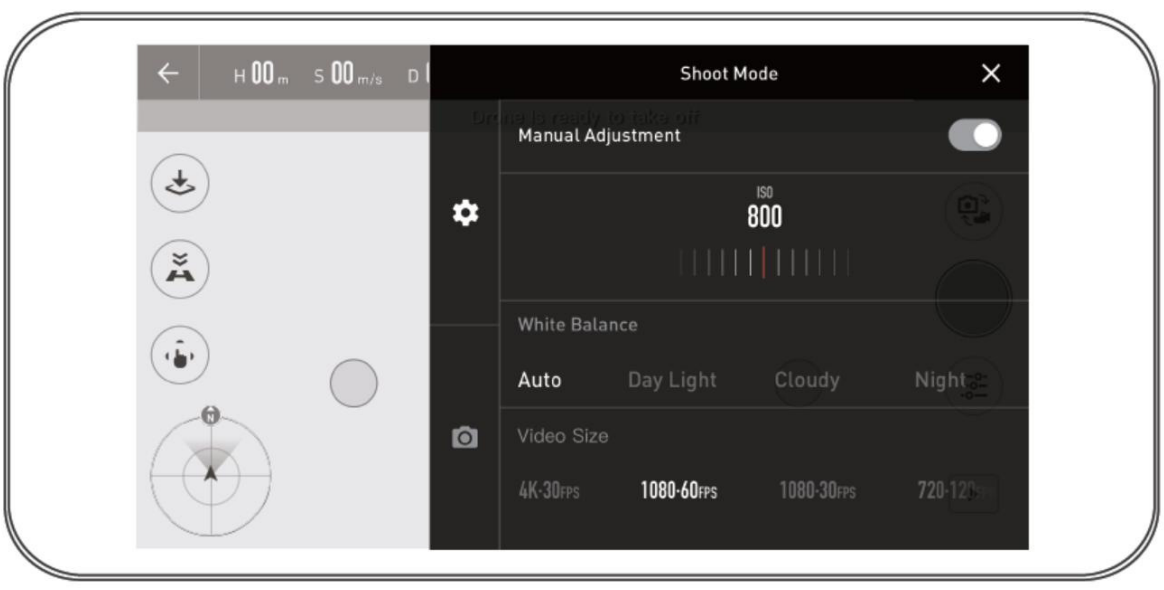

yitechnology.com

Picture shooting

Time-lapse shooting

Click to enter the camera setting, and click to trigger the countdown shooting after setting the delay time.

> Note:
> *The mobile device can only enter the page of shooting functions after it is connected to the YI Pixie drone.

Burst mode

Click to enter the camera setting, and click to trigger the high-speed continuous shooting after setting the quantity of pictures for continuous shooting.

Video shooting

Click to start to shoot the video. Click to stop the video shooting. The YI Pixie drone can shoot the video with three types of picture quality, which are 720p, 1080p and 4k, and the real-time preview picture is of 720P, which can be directly downloaded to the mobile device.

Fixed-point surrounding

Under the mode, the YI Pixie drone takes the traced thing as the center of a circle and takes the set distances as the radius to encircle and shoot the traced thing.

> Note:
> When using the fixed-point surrounding function, please set the camera direction in the menu as inward / outward. If it is set as "inward", the shooting direction is the center direction. If it is set as "outward", the shooting direction is outward.

Click to enter the surrounding flight setting, set the surrounding radius and click the to start the surrounding flight.

Click to achieve the clockwise surrounding flight; and click to achieve the counterclockwise surrounding flight.

yitechnology.com

Face follow

Face follow means that the DRONE recognizes human faces and traces automatically; meanwhile, it is a function
that can record a video.
When using the face follow function, it is suggested to manually adjust the camera elevation angle to 0 degree.
Selecting the face follow in the setting menu, and then flight YI Pixie drone at a proper height, the follow
function will take effect.

Warnings:
* Pay attention to the surrounding environment when using YI Pixie drone. It is suggested to use in bright and spacious places and ensure that there is no obstacle. Please do not make any sudden, acute act or act with large range ability to prevent YI Pixie drone from unable to recognize timely and accurately. Pay attention to the surrounding environmental safety constantly and control the DRONE timely upon any safety question to avoid unnecessary accidents.

File management

Multimedia library

Click ▶ ▲ in the bottom right corner on the APP main interface to enter the multimedia library, where you can view, archive and share the pictures and videos. The videos shot need to be downloaded from the YI Pixie drone to the mobile device via Wi-Fi.

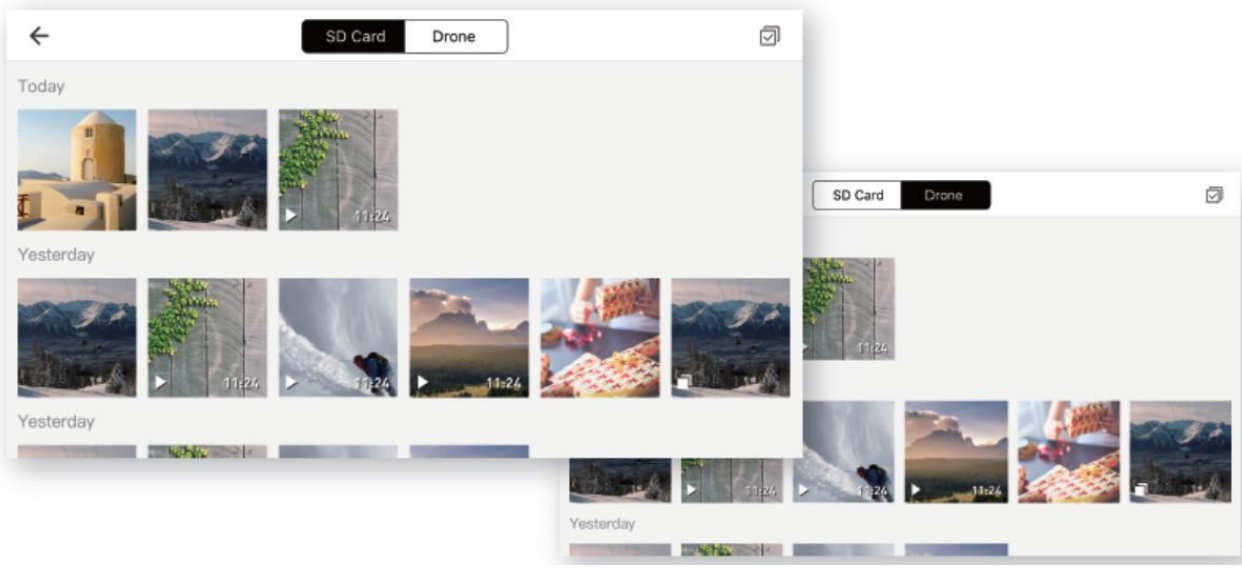

yitechnology.com

APP setting of YI Pixie drone

Click ⚙ ▲ on the App main page to enter the setting interface.

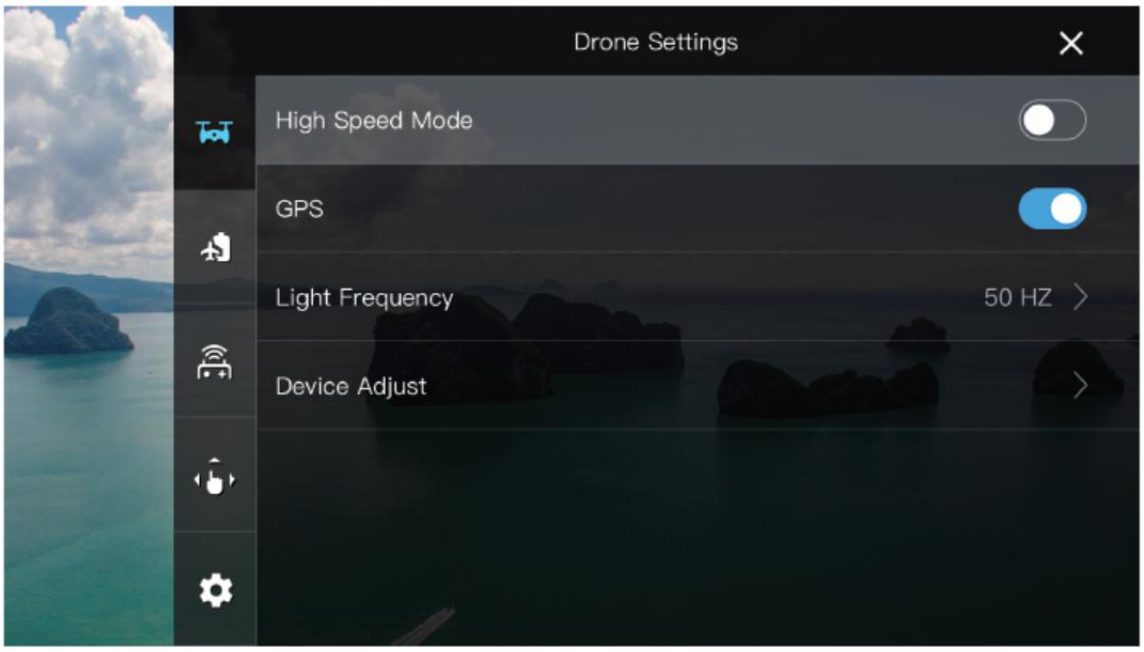

Silent Shutter

Click the icon to turn on/off the sound for taking pictures.

Forward

Click the icon to adjust the DRONE head's orientation (the camera is turned towards the user or outwards).

Face Recognition

Face follow means that the DRONE recognizes human faces and traces automatically; meanwhile, it is a function that can record a video.
When using the face follow function, it is suggested to manually adjust the camera elevation angle to 0 degree.
Selecting the face follow in the setting menu, and then flight YI Pixie drone at a proper height, the follow function will take effect.

Wi-Fi update

The name and password of the YI Pixie drone's Wi-Fi can be modified, password WiFi Info Modify

Check for Updates

Check and upgrade the firmware version under this option.

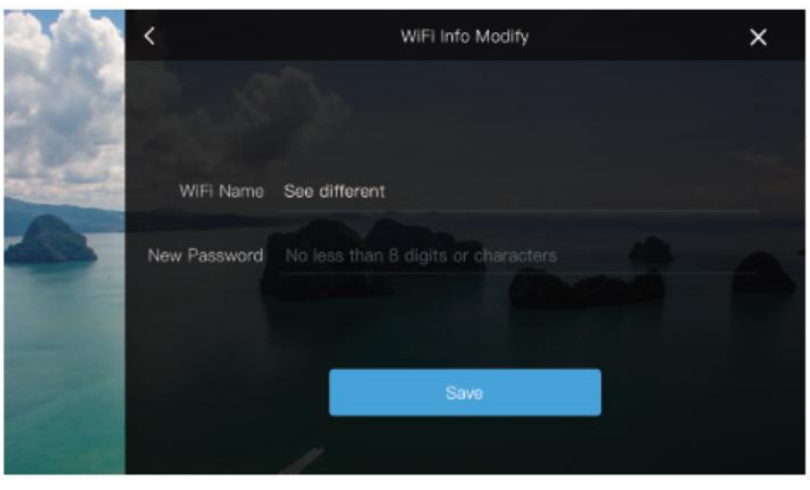

yitechnology.com

Calibration

Geomagnetism calibration Please refer to the calibration step introductions in the menu for detailed steps.

Notes

* Geomagnetism has been calibrated before leaving the factory, which has no need to calibrate again in general. Only under specific conditions, for example, the DRONE is used in high-intensity magnetic field and causes that the geomagnetism calibration in disorder, it needs to calibrate again.

Memory space

The user can check the remaining capacity of the YI Pixie drone's memory through this option

User manual

When users install and use this App for the first time, the tutorial will pop up automatically to give necessary operation instructions to the new users. After that, the users can view the tutorial in the "Product manual".

About

Click this option to display the current version of the YI Pixie drone, as well as its firmware version and service terms, together with other related information.

User information

The users can modify the user picture, nickname and other information under this option.

Flight History

The function of flight route will record your flight data, which can also be uploaded for ranking.

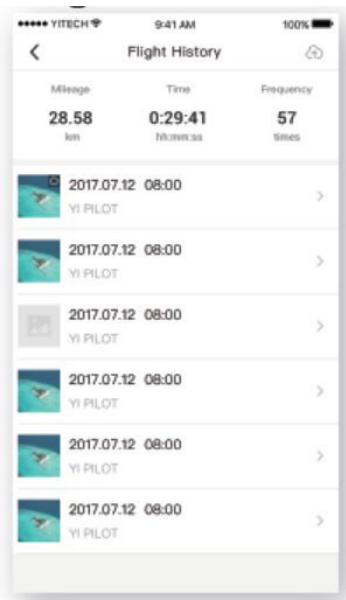

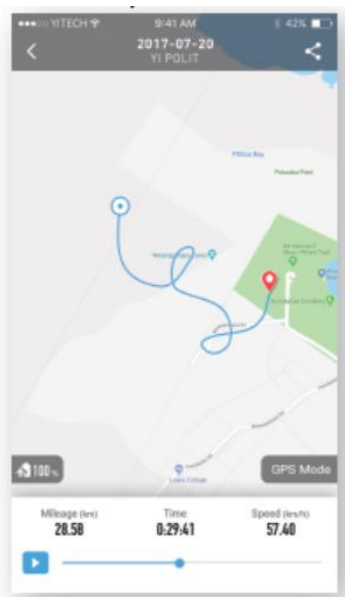

Main camera angle adjustment

The user can adjust the camera angle manually, including 4 selectable angles of 0 degree (completely horizontal), -25 degrees, -50 degrees, -90 degrees (completely adown).

Note:

* After selecting the camera angle, please select corresponding angle in the app

yitechnology.com

Repair and maintenance

The users can change the casing and propeller of the YI Pixie drone according to instructions in this manual.
If the casing or propeller of the YI Pixie drone is damaged, the user can follow the instructions in this manual to replace it. (When the users buy the YI Pixie drone, two sets of propeller and two colorful shells will be donated additionally).
Please replace new parts based on the following steps. Please use the tools and accessories officially authorized by the YI Pixie drone.

Remove and replace the propeller

The four propellers of the YI Pixie drone are composed of two sets of propellers rotating in opposite directions, of which those on the diagonal line rotate in the same direction.
When disassembling and replacing the propeller, please select the right propeller and mount it on the corresponding position.

1.Ensure that the YI Pixie drone is power-off,
2.Place the DRONE on the level surface;
3.Exert an upward and horizontal force on the paddle.
4.Separate the paddle bottom from the motor.
5.Align the new paddle to the correct slot and mount it on the motor.

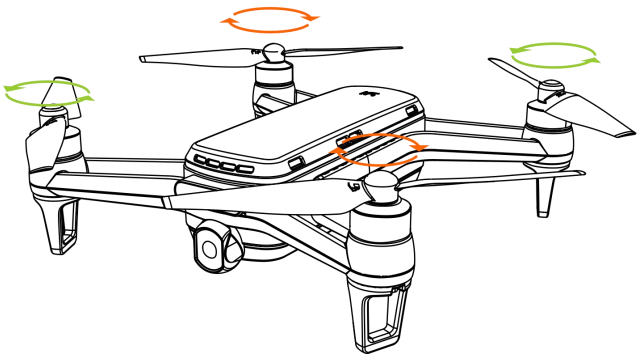

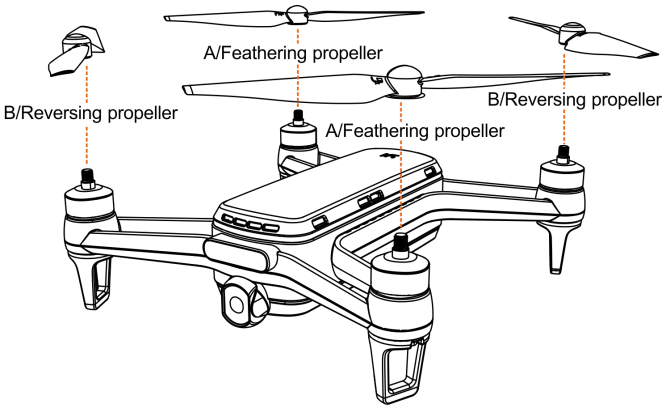

Note:
*Slightly push aside the propeller with both hands, and take out the DRONE after hearing the crisp "Clap" sound twice.
Upon impact or falling, please fasten the propeller to avoid loosening.

yitechnology.com

Storage & transportation

Please store the YI Pixie drone in a proper environment. Do not hang heavy objects on the DRONE.

Transportation

The temperature range of the YI Pixie drone's chargeable lithium battery during transportation is about 25℃

Battery storage

Please store the battery in a proper environment separately to prevent the battery from over discharge.

Half a year	-30~25℃(1*)
3 months	-30~25℃(1*)
1 month	-30~25℃(1*)

	Charging temperature					Storage temperature
	0℃	5℃	25℃	45℃	50℃	25℃
Charging percentage	80℃	90℃	100℃	95℃	95℃	

Note:
Store the battery out of the reach of children. If a child swallows a part not in purpose, please seek for medical advices immediately.
* It is forbidden to place the battery in places nearby heat sources, for example, inside a vehicle under a direct sunlight or hot season, combustion source or heating boiler. Please refer to the above table for the ideal storage temperature of the battery.
* Environment storing the battery should be kept dry. Please do not place the battery in water or places that are possible to have leakage.
* It is forbidden to mechanically impact, grind and impale the battery; it is forbidden to make the battery fall or man-made short circuit.
* It is forbidden to store or transport the battery together with glasses, watches, metal neglects, hair pins or other metal objects.
* Do not transport damaged battery. Once the battery is needed to transport, please discharge the battery to about 50%.
(Upon flights, please discharge to below 5% ）

yitechnology.com

Battery disposal

The battery will age due to long service time, or become out-of-service due to other reasons. It is forbidden to continue using the battery under the following conditions, and the battery shall be properly disposed according to the right recycling methods and local laws as well as regulations.
Bulge: The battery surface has obvious bulges, deformation or other abnormities;
Aging: There are no obvious signs of aging, but the endurance time is sharply decreased, compared to the initial status;
Damage: There are obvious signs of damages, such as cracks, abrasion, puncture or other abnormities.
Please properly dispose the waste batteries according to the requirements stipulated by local laws and regulations concerning the waste battery recycle and disposal.
To avoid the damage to the battery, please keep it away from the damp or dusty environment. If the battery won't be used for a long time, please remove it from the YI Pixie drone and separately store it under the temperature of about 25℃.

Firmware upgrade

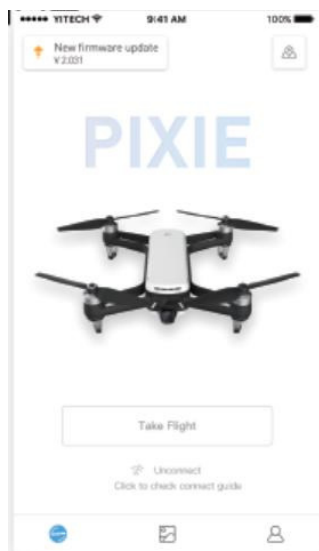

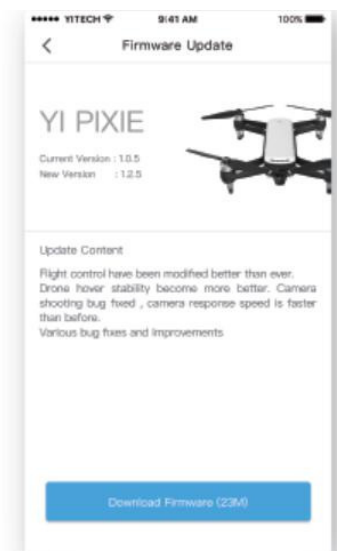

1. Upgrade the firmware through YI Pixie drone App.

a. Connect the mobile device to the YI Pixie drone to obtain the DRONE firmware version;
b. Connect the mobile device to the Internet to obtain the latest firmware version. If the YI Pixie drone's firmware version is the same to that latest one, its App will inform the user that the firmware is already of the latest version; otherwise, the YI Pixie drone App will display the "Download" button for the user to download the latest firmware version;
c. After the downloading, the YI Pixie drone App will inform the user to connect the YI Pixie drone again and upload the latest firmware version to the DRONE;
d. After the uploading, the YI Pixie drone starts to upgrade the firmware. The upgrade process will last for about 3 minutes, during which the power indicator flashes fastly.
e. When the firmware is successfully upgraded, the power indicator stops fast flashing and restores to be normally on.

yitechnology.com

After-sale warranty information

1. When your YI Pixie drone has damage conditions within the warranty scope, please call the customer service hotline 13662655920 of Yi technology as soon as possible.
2. Send the damaged YI Pixie drone to Yi technology's repair factory under the guidance of customer service.
3. In case of damage conditions, please call the customer service hotline of Yi technology firstly. The customer service will record the condition to avoid bringing inconvenience to your follow-up repair services.

Damage caused by the following reasons is excluded in the warranty scope :

1. If the DRONE body and corollary equipment disappear partially or fully, the disappeared part is excluded in the warranty scope.
2. The DRONE is stolen, robbed, forgotten, missed or discarded.
3. Damage caused by flight under improper conditions.
4. Any repair expenses when the DRONE is watered.
5. Repair expenses of battery, propeller blade and added accessories.
6. Any loss caused by behaviors in purpose.
7. Natural wear and tear and shell damage that doesn't influence application.
8. Direct and indirect losses caused by natural disaster, war, military action, riot, coup, conspiracy, terrorist activity and others.
9. The repair request is not within the Yi technology's warranty validity.
10. Direct losses and / or predicted interests in any form.
11. Extra expenses generated from increasing and improving DRONE technical standards and usability.
12. Personal injuries and / or property losses caused by the DRONE to consumers or any other personnel.
13. Any lawsuit, arbitration and related expenses related to Yi technology warranty responsibilities.

yitechnology.com

Disclaimer & Warning

The product is not a toy, and it is not suitable to be used by persons below 18-year-old. Please do not make children tough YI Pixie drone. Please pay special attention when operating under the condition that there are children.

Before using the product, please read the file carefully. The statement has significant influences on your safety using the product and your legal rights and interests.

The product is a portable DRONE, which will provide flexible and free flight experience under normal operation of power and being undamaged of various parts. Login http: //www.yitechnology.com to acquire the latest introductions and warnigns. Yi technology keeps the right to update the disclaimer. For the latest disclaimer, the version at www.yitechnology.com official website and accepted by your e-mail shall be subject to.

Be sure to read the document carefully before using the product to understand your legal rights and interests, responsibilities and safety introductions. Otherwise, it is possible to bring property loss, accident and potential personal safety hazard. Once using the product, it shall be deemed that you have understood, recognized and accepted all clauses and contents of the statement. The user commits to be responsible for its own behaviors and all consequences generated herefrom. The user commits to use the product only for proper purposes, and it agrees with the clause and any related policies or rules that are possible to be formulated by Yi technology. The flying data generated when the user understands and agrees to use the product will be uploaded and stored in the server of Yi technology. Within the largest scope allowed by laws, under any condition, Yi technology shall not bear responsibility for any indirect, consequential, punitive, occasional, special or penalty damage, including losses suffered by you due to purchasing, using or unable to use the product (versa though Yi technology has been told the possibility of such losses).

FCC Statement：

Any Changes or modifications not expressly approved by the party responsible for compliance could void the user's authority to operate the equipment.

This device complies with part 15 of the FCC Rules. Operation is subject to the following two conditions:

(1) This device may not cause harmful interference.

(2) This device must accept any interference received, including interference that may cause undesired operation.

FCC Radiation Exposure Statement:

This equipment complies with FCC radiation exposure limits set forth for an uncontrolled environment. This equipment should be installed and Operated with minimum distance 20cm between the radiator & your body.

Note: This equipment has been tested and found to comply with the limits for a Class B digital device, pursuant to part 15 of the FCC Rules. These limits are designed to provide reasonable protection against harmful interference in a residential installation. This equipment generates, uses and can radiate radio frequency energy and, if not installed and used in accordance with the instructions, may cause harmful interference to radio communications. However, there is no guarantee that interference will not occur in a particular installation. If this equipment does cause harmful interference to radio or television reception, which can be determined by turning the equipment off and on, the user is encouraged to try to correct the interference by one or more of the following measures:

—Reorient or relocate the receiving antenna.

—Increase the separation between the equipment and receiver.

—Connect the equipment into an outlet on a circuit different from that to which the receiver is connected.

—Consult the dealer or an experienced radio/TV technician for help.