WF01A Module Datasheet

Name: WiFi Module

Model No.: WF01A

Revision: V1.02

Revision History

Revision	Description	Approved	Date
V1.01	Initial Release	George He	20170718
V1.02	Update certification information	George He	20170831

Contents

1. General Description 3
2. Applications 3
3. Features 3
4. Application Block Diagram 4
5. Interfaces 4
USB 4
I2C 4
I2S(192K/24bits) 5
PCM 6
UARTS lite 7
WAN/LAN 7
6. Module Specifications 7
7. Module Pinout and Pin Description 9
Module Pinout 9
Pin Description 9
8. Dimensions 11
9. Electrical Characteristics 11
10. Ordering Information 12
11. Contact Information 13

1. General Description

The WF01A module compliant to 802.11 a/n/ac Wi-Fi Solution, it integrates a dual-core MIPS1004Kc (580MHz), 3-port switch, USB2.0, SD-XC, I2S. The module is suitable for 802.11ac, hotspot, VPN, AC (Access Control). For consumer electronic devices, the module requiring only an external 3.3V power supply . The module integrates a 5GHz 1x1 WLAN chip with internal PA and LNA. It supports 5GHz operations up to 433 Mbps for 80 MHz channel respectively. The module support AP mode and client mode and router mode.

2. Applications

- USB WiFi Camera
- 802.11ac Router
- VPN
- WiFi Router
- WiFi Audio
- UART 5GHz WiFi
- Home Automation
- Smart Home Gateway
- Industry Control

Figure 1: WF01A Top View

3. Features

- IEEE 802.11 a/n and 802.11ac draft compliant.
- Dual-band 3T3R mode with data rate up to 733Mbps.
- 5g band 1T1R Mode with support for a 433Mbps TX/RX PHY rate.
- DDR2 memory 128M Bytes Winbond).
- Flash memory 8M Bytes (Winbond).
- 2 LAN ports and 1 WAN port with 100Mbps PHY.
- Firmware: Linux 2.6 SDK, OpenWRT
- Support WAN/LAN/USB/I2C/I2S/SDIO/ UART interfaces.
- Support 20MHz, 40MHz, 80MHz bandwidth.
- Security: WEP64/128, TKIP, AES, WPA, WPA2, WAPI.
- Support AP/Client/Router mode.
- RoHS compliance meets environment-friendly requirement.
- FCC,CE compliance
- 36-pin header.
- 36.2mm(L) x 29.6mm(W) x 13.2mm(H) dimension.

4. Application Block Diagram

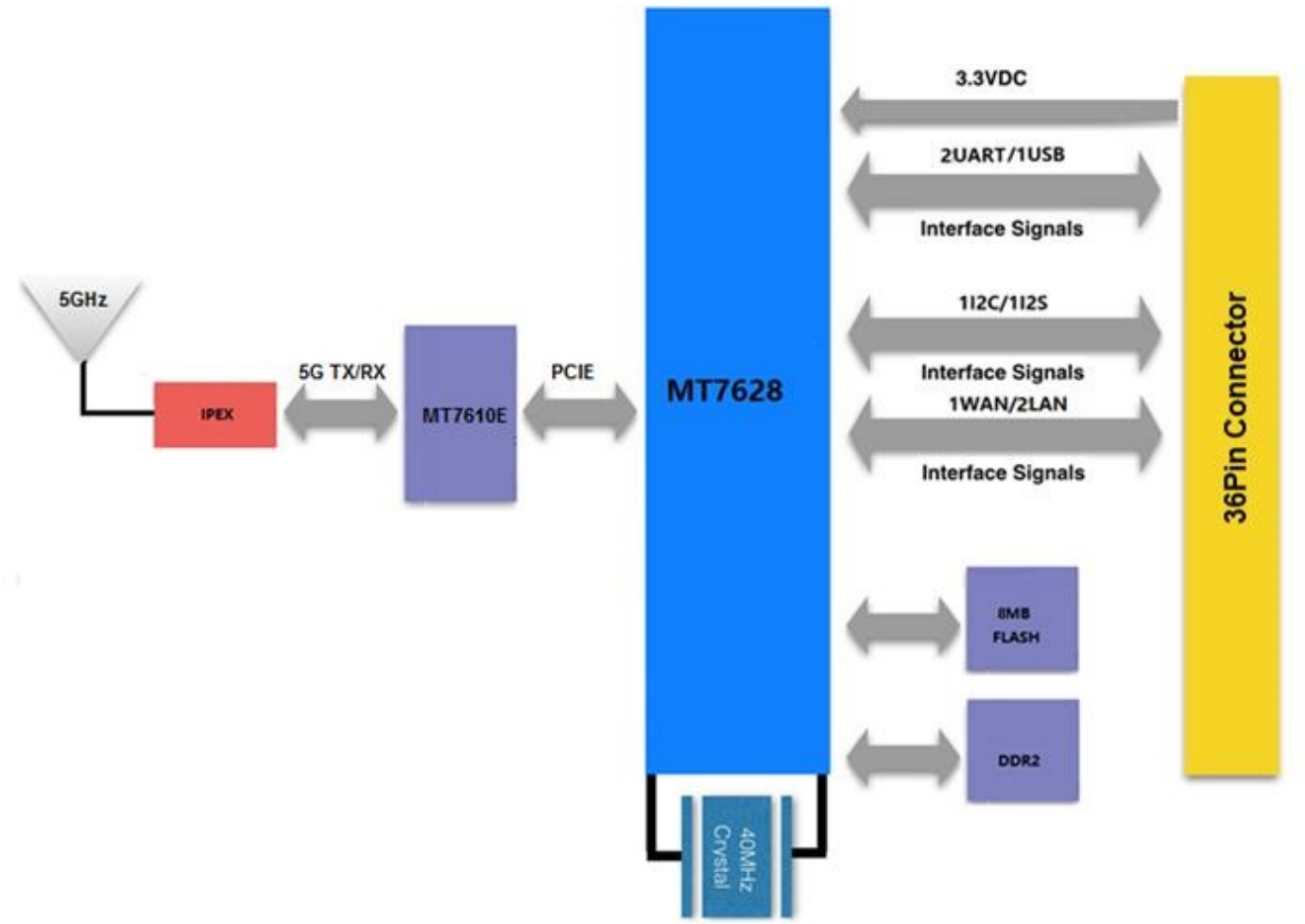

Figure 2: WF01A Block Diagram

5. Interfaces

USB

The USB interface support USB slave devices for USB disk and USB 3G/4G dongle and USB camera.

I2C

WF01A Pin Number	Pin Name	GPIO(2'b01)	I2C(2'b00)
7	I2C_SD	GPIO#05	I2C_SD
8	I2C_CLK	GPIO#04	I2C_CLK

Table5-1: I2C pin share scheme

Note: Controlled by I2C_MODE register

I2S(192K/24bits)

WF01A Pin Number	Pin Name	GPIO(2'b01)	I2S(2'b00)	PCM(2'b10)
17	I2S_CLK	GPIO#03	I2S_CLK	PCMFS
15	I2S_WS	GPIO#02	I2S_WS	PCMCLK
16	I2S_SDO	GPIO#01	I2S_SDO	PCMDTX
14	I2S_SDI	GPIO#0	I2S_SDI	PCMDRX

Table5-2: I2S/PCM pin share scheme

Note: Controlled by I2S_MODE register

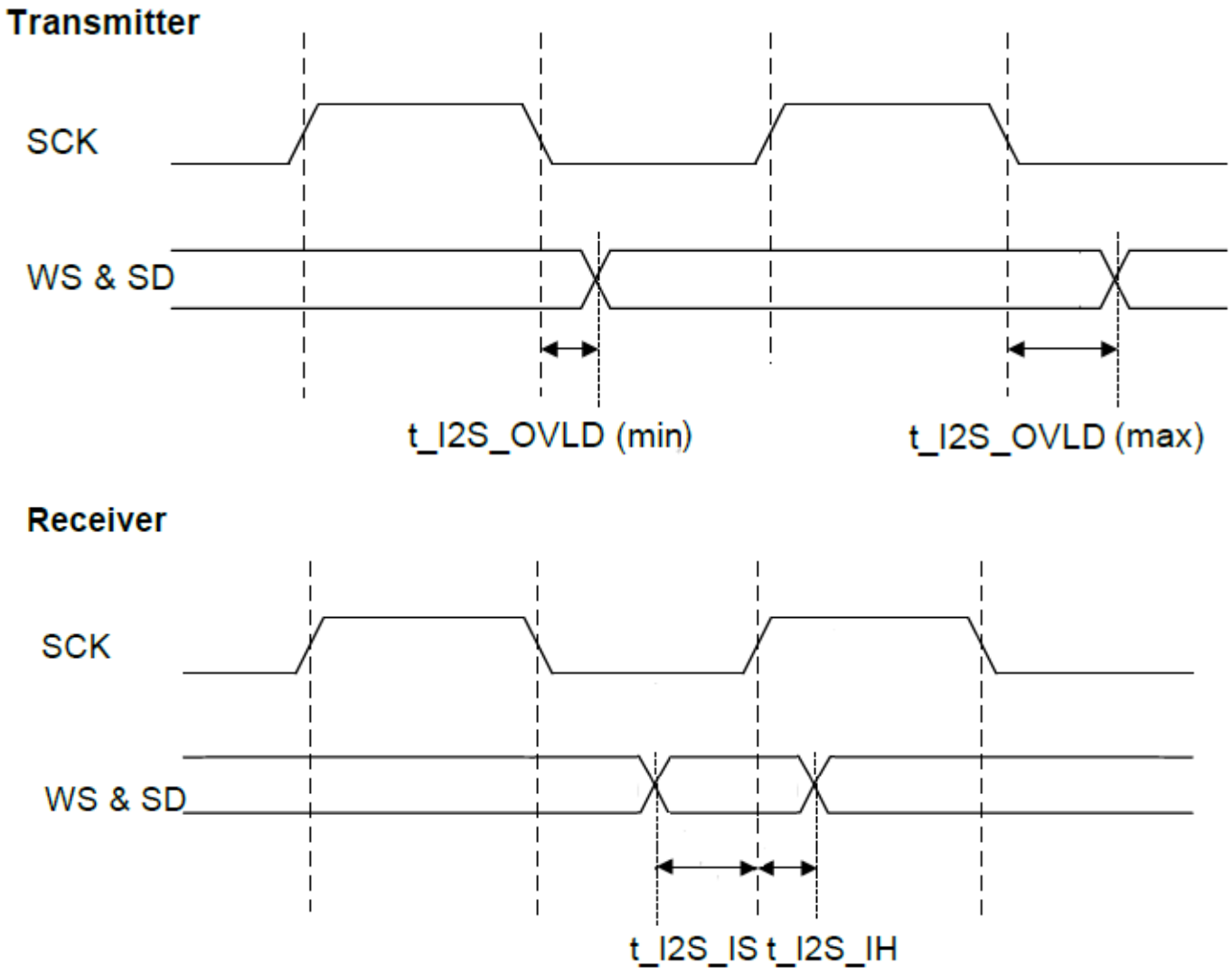

Figure 3: I2S Timing

Symbol	Description	Min	Max	Unit
t_I2S_IS	Setup Time for I2S input(data & WS)	3.5		ns
t_I2S_IH	Hold Time for I2S input(data & WS)	0.5		ns
t_I2S_OVLD	I2S_CLK to I2S output(data & WS) valid	2.5	10	ns

Table5-3: I2S Interface Diagram Key

PCM

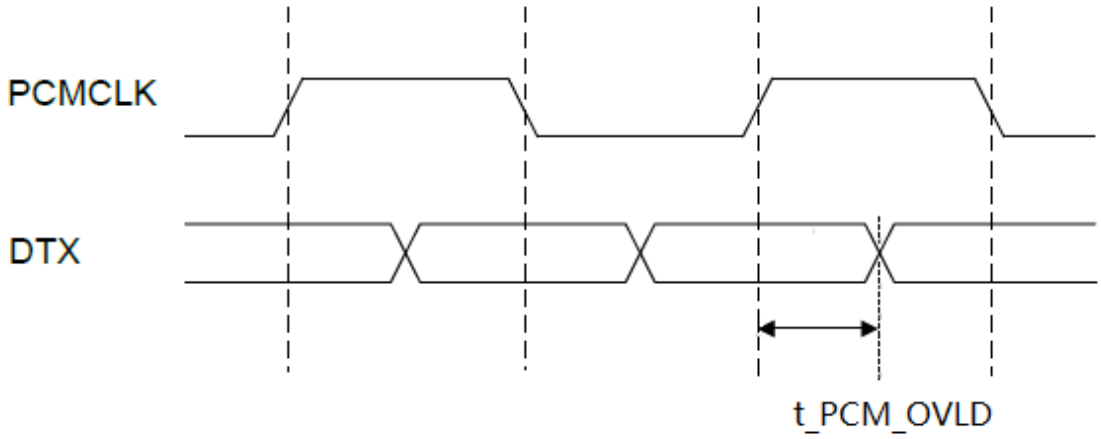

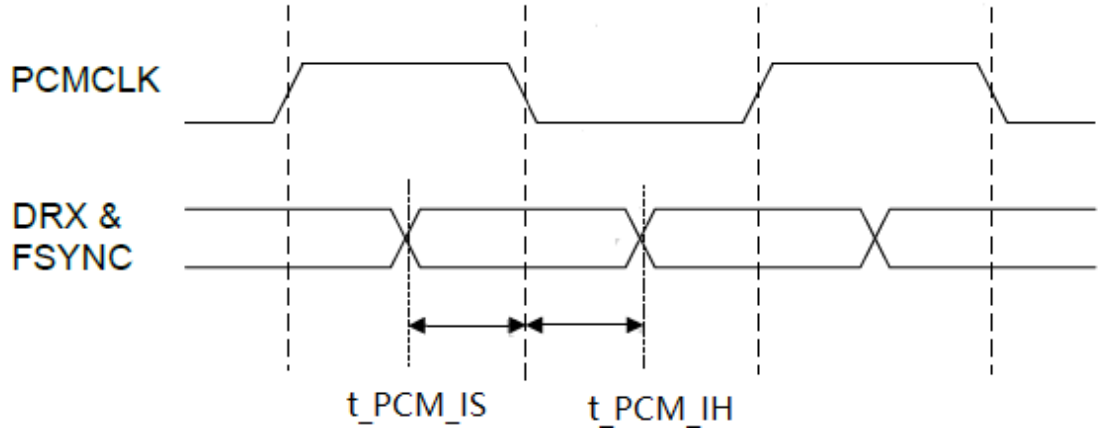

Figure 4: PCM Timing

Symbol	Description	Min	Max	Unit
t_PCM_IS	Setup Time for PCM input to PCM_CLK fall	3.5		ns
t_PCM_IH	Hold Time for PCM input to PCM_CLK fall	1.0		ns
t_PCM_OVLD	PCM_CLK to PCM output valid	10.0	35.0	ns

UARTS lite

The module support 2UART:

WF01A Pin Number	Pin Name	GPIO	UART	Pin Share
32	UART_RXD0	GPIO#13	UART0_RXD	UART0(For Debug)
33	UART_TXD0	GPIO#12	UART0_TXD	
12	UART_RXD1	GPIO#46	UART1_RXD	PWM_CH1
11	UART_TXD1	GPIO#45	UART1_TXD	PWM_CH0

Table5-4: UART pin share scheme

WAN/LAN

The WF01A module integrates 3-port 10/100Mbps fast Ethernet switch.

6. Module Specifications

Hardware Features	
Model	WF01A
Antenna Type	IPEX
Chipset solution	MT7628,MT7610
Voltage	DC 3.3V±5%
Dimension(L×W×H)	36.2x 29.6 x 13.2mm
Wireless Features	
Wireless Standards	IEEE 802.11a/n/ac
Frequency Range	5180-5240MHz, 5745-5825MHz
Data Rates	IEEE 802.11n :
	MCS0--MCS7 @ HT20 /5GHz band
	MCS0--MCS7 @ HT40 /5GHz band
	MCS0--MCS9 @ HT40 /5GHz band
	IEEE 802.11ac : MCS0--MCS9 @ VHT80 /5GHz band
Receiver Sensitivity	VHT80 MCS9 : -60dBm@10% PER(MCS9) /5GHz band
	HT40 MCS9 : -63dBm@10% PER(MCS9) /5GHz band
	HT40 MCS7 : -70dBm@10% PER(MCS7)
	HT20 MCS7 : -71dBm@10% PER(MCS7)
	54M: -76dBm@10% PER

EVM	≥-32db: IEEE 802.11ac 11.5dBm @HT80 MCS9 /5GHz band
	≥-30db: IEEE 802.11n 14dBm @HT20/40 MCS7 /5GHz band
	≥-28db: IEEE 802.11n 16dBm @HT20/40 MCS7
Modulation Technique	802.11a/n: OFDM (BPSK, QPSK, 16QAM, 64QAM)
	802.11ac: OFDM (BPSK, QPSK, 16QAM, 64QAM, 256QAM)
Wireless Security	WPA/WPA2, WEP, TKIP and AES, WPS2.0, WAPI
Work Mode	Bridge/Gateway/AP Client
Others	
Certification	Module can meet below certification requirement： RoHS； FCC part15.407（ 5G）； MIC Notice No.88 Appendix No.45&47（ 5G）； Module can meet below final products certification requirement： FCC DOC、 FCC VOC（FCC PART15B）； CE-RED（EN 301893 EN 3014891/-17， EN62311（ 5G），EN60950， EN55022，EN55024）； China SRRC certification
MAC Address Requirement	ID: 00-0A-00, Product ID: 5X-XX-XX ~ AX-XX-XX
Environment	Operating Temperature: -20℃~55℃
	Storage Temperature: -40℃~125℃
	Operating Humidity: 10%~90% non-condensing
	Storage Humidity: 5%~90% non-condensing

7. Module Pinout and Pin Description

Module Pinout:

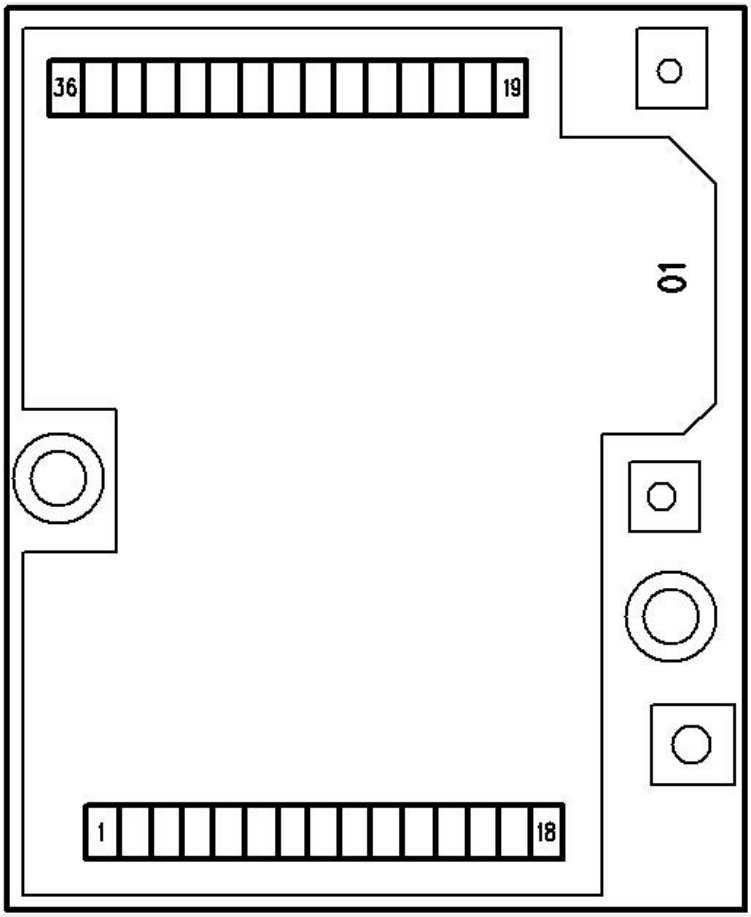

Figure 5: WF01A Pin Package

Pin Description:

Pin No.	Pin name	Description	Remark
1	VDD_3.3V	3.3V input 1200mA	+3.3V
2	VDD_3.3V	3.3V input 1200mA	+3.3V
3	GND	Ground	GND
4	GND	Ground	GND
5	P4_LED	LAN_PORT4_LED	P4_LED_N / GPIO#39
6	P3_LED	LAN_PORT3_LED	P3_LED_N / GPIO#40
7	I2C_SD	I2C Data	I2C_SDA(PU 2K2) / GPIO#5
8	I2C_SCLK	I2C clock	I2C_SCL(PU 2K2) / GPIO#4

9	WDT_RST_N	WPS/RST	WDT_RST_N / GPIO#38/O, IPU
10	P0_LED	WAN_PORT_LED	P0_LED_N / GPIO#43
11	UART_TXD1	UART1 Serial Data Output	UART1_TXD / GPIO#45 / O, IPU
12	UART_RXD1	UART 1 Serial Data Input	UART1_RXD / GPIO#46
13	WPS_LED	WPS_LED	I2S_MCLK/WPS_LED_N / GPIO#37
14	I2S_DI	I2S data input	I2S_SDI/GPIO#0/PCMDRX
15	I2S_WS	I2S word select	I2S_WS/GPIO#2/PCMCLK
16	I2S_DO	I2S data output	I2S_SDO /GPIO#1/PCMDTX/IPD
17	I2S_CLK	I2S clock	I2S_CLK/GPIO#3/PCMFS
18	GPIO0	General Purpose I/O	POWER_ON# / GPIO#11/IPD
19	WAN_PORT_RX+	WAN port	WAN_RX+
20	WAN_PORT_RX-	WAN port	WAN_RX-
21	WAN_PORT_TX+	WAN port	WAN_TX+
22	WAN_PORT_TX-	WAN port	WAN_TX-
23	LAN_PORT3_TX+	Ethernet port3	SD_WP / GPIO#22
24	LAN_PORT3_TX-	Ethernet port3	SD_CD / GPIO#23
25	LAN_PORT3_RX+	Ethernet port3	SD_D1 / GPIO#24
26	LAN_PORT3_RX-	Ethernet port3	SD_D0 / GPIO#25
27	LAN_PORT4_RX+	Ethernet port4	SD_CLK / GPIO#26
28	LAN_PORT4_RX-	Ethernet port4	SD_CMD/ GPIO#27
29	LAN_PORT4_TX+	Ethernet port4	SD_D3 / GPIO#28
30	LAN_PORT4_TX-	Ethernet port4	SD_D2 / GPIO#29
31	WLED_N	Wireless LED	WLED_N / GPIO#44
32	UART_RXD0	UART0 only for debug	UART0_RX / GPIO#13
33	UART_TXD0	UART0 only for debug	UART0_TX / GPIO#12 / O, IPD
34	GND	Ground	GND
35	USB-	USB data pin Data-	USB_D-
36	USB+	USB data pin Data+	USB_D+

8. Dimensions

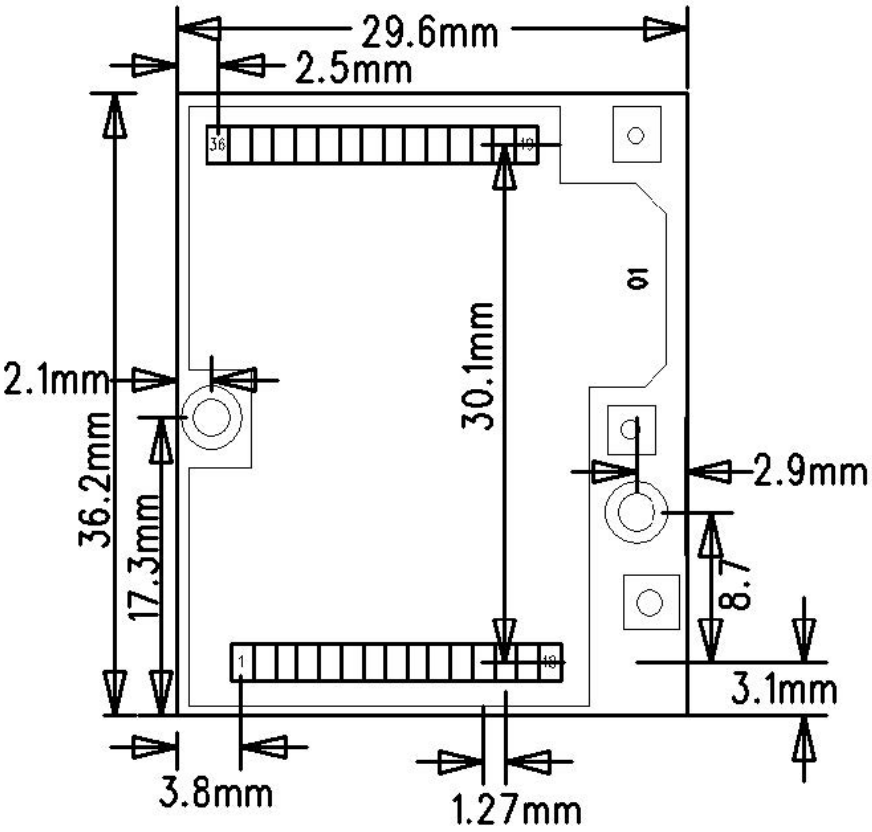

Figure 6: WF01A Recommend PCB Footprint

9. Electrical Characteristics

a) Absolute Maximum Ratings

Parameter	Condition	Min	Typ.	Max.	Unit
Storage temperature range		-40		125	°C
ESD Protection	VESD	/		2000	V
Supply voltage	VDD_3.3V	0		3.6	V
Voltage on any I/O pin		-0.3		3.63	V

Table9-1: Absolute Maximum Ratings

b) Recommended Operation Ratings

Parameter	Symbol	Minimum	Typical	Maximum	Unit
Extended temp.	TA	-20		55	ºC
Power Supply	VDD_3.3V	3.14	3.3	3.46	V
Input Low Voltage	VIL	-0.3		0.8	V
Input High Voltage	VIH	2		3.63	V

Table9-2: Operating Conditions

c) Measurement Conditions

System state	Current (Typ.)@3.3V
Standby	280 mA
Transmit (5G; +13 dBm @ TX HT20 MCS7.)	590 mA
Transmit (5G; +16 dBm @ 11b 11Mbps.)	850 mA

Table9-3: Power Consumption in Different States

10. Ordering Information

Module No.	Antenna Connector Type	SPI Flash Size
WF01A	IPEX Connector	16M Bytes

11. Contact Information

Skylab M&C Technology Co., Ltd.

深圳市天工测控技术有限公司

Address: 6 Floor, No.9 Building, Lijincheng Scientific & Technical park, Gongye East Road, Longhua District, Shenzhen, Guangdong, China

Phone: 86-755 8340 8210（Sales Support）

Phone: 86-755 8340 8510（Technical Support）

Fax: 86-755-8340 8560

E-Mail: sales1@skylab.com.cn

Website: www.skylab.com.cn www.skylabmodule.com

This device complies with Part 15 of the FCC Rules. Operation is subject to the following two conditions: (1) this device may not cause harmful interference, and (2) this device must accept any interference received, including interference that may cause undesired operation.

Warning: changes or modifications not expressly approved by the party responsible for compliance could void the user's authority to operate the equipment.

This equipment has been tested and found to comply with the limits for a Class B digital device, pursuant to Part 15 of the FCC Rules. These limits are designed to provide reasonable protection against harmful interference in a residential installation. This equipment generates, uses and can radiate radio frequency energy and, if not installed and used in accordance with the instructions, may cause harmful interference to radio communications. However, there is no guarantee that interference will not occur in a particular installation.
If this equipment does cause harmful interference to radio or television reception, which can be determined by turning the equipment off and on, the user is encouraged to try to correct the interference by one or more of the following measures:
-- Reorient or relocate the receiving antenna.
-- Increase the separation between the equipment and receiver.
-- Connect the equipment into an outlet on a circuit different from that to which the receiver is connected.
-- Consult the dealer or an experienced radio/TV technician for help.

Please notice that if the FCC identification number is not visible when the module is installed inside another device, then the outside of the device into which the module is installed must also display a label referring to the enclosed module. This exterior label can use wording such as the following: "Contains FCC ID: 2AFO3WF01A" any similar wording that expresses the same meaning may be used.

RF EXPOSURE INFO:
This equipment complies with FCC radiation exposure limits set forth for an uncontrolled environment. This equipment should be installed and operated with a minimum distance of 20cm between the radiator & your body. This transmitter must not be co-located or operating in conjunction with any other antenna or transmitter.

Installation INFO:
The module is limited to OEM installation ONLY.
The OEM integrator is responsible for ensuring that the end-user has no manual instruction to remove or install module.
The module is limited to installation in mobile application;
A separate approval is required for all other operating configurations, including portable configurations with respect to Part 2.1093 and difference antenna configurations.
There is requirement that the grantee provide guidance to the host manufacturer for compliance with Part 15B requirements.