Triple+

Detect. Connect. Protect.

NWL™ Water Product User's Manual

NWL-TRN-001

Flooding Detection System

Background

Triple+ wireless NWL™ (No Water Leak) system is designed to detect water leaks and prevent the subsequent damages. The system shuts down the water supply by way of a wireless communication system.

The system's objective is to minimize potential flooding damages by shutting down the water supply when there is no activity and/or a flooding is indicated within the system.

Each system is comprised of a Shut Off unit (valve), installed on the main water supply pipe, a flood detector and a control unit for closing and opening the valve.
The system presents the user with a clear and simple indication of the valve's status (either open or closed.) In addition, the Shut Off unit can be controlled (and thus, the valve can be opened or closed) manually.

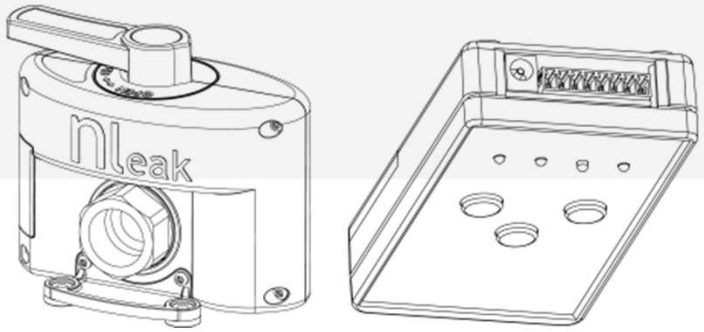

Triple+

System specification

Shut Off unit (valve)

A Shut Off unit 3/4" (Sagiv valve)
is installed on the main water supply pipe with the intention of allowing or preventing water from passing through the pipes.

1. Opening/ closing handle.

1A. Open/ closed indication.

2. Shut Off unit body (valve).

3. 3/4" entry/exit adapter.

4. Base for a valve not wall mounted.

4A. Base for a wall mounted valve.

5. 2XCR123 battery housing

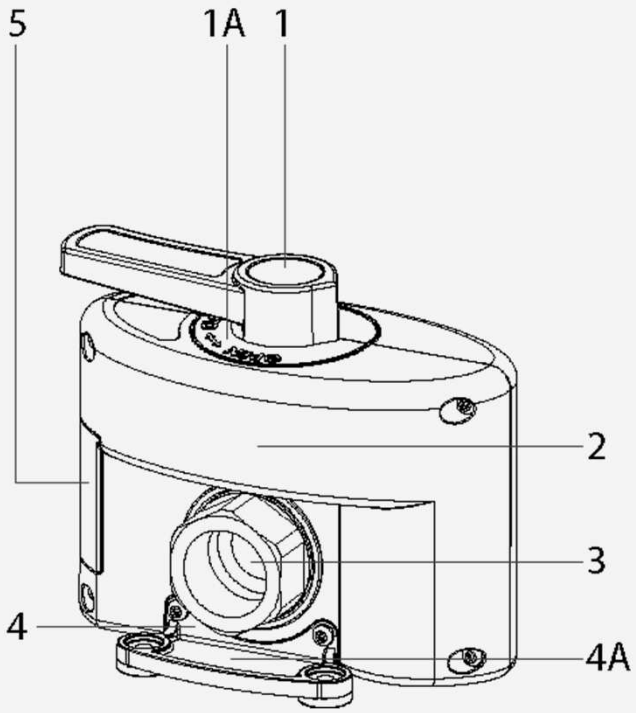

Shut Off unit installation

- The Shut Off unit should be located on the main water line leading into the structure. The system should not disconnect a fire extinguishing line or a sprinkler line.
- Ensure easy access to the battery housing.
- The unit should be installed with the handle on top and horizontally placed
- To provide effective communication, ensure to have no more than 12 meters (if a wall is present within the structure) or 30 meters within an open space structure between the controller and the valve and that the units (controller and valve) are not positioned within metal cabinets. If the above is problematic, consider setting up a relay (repeater).

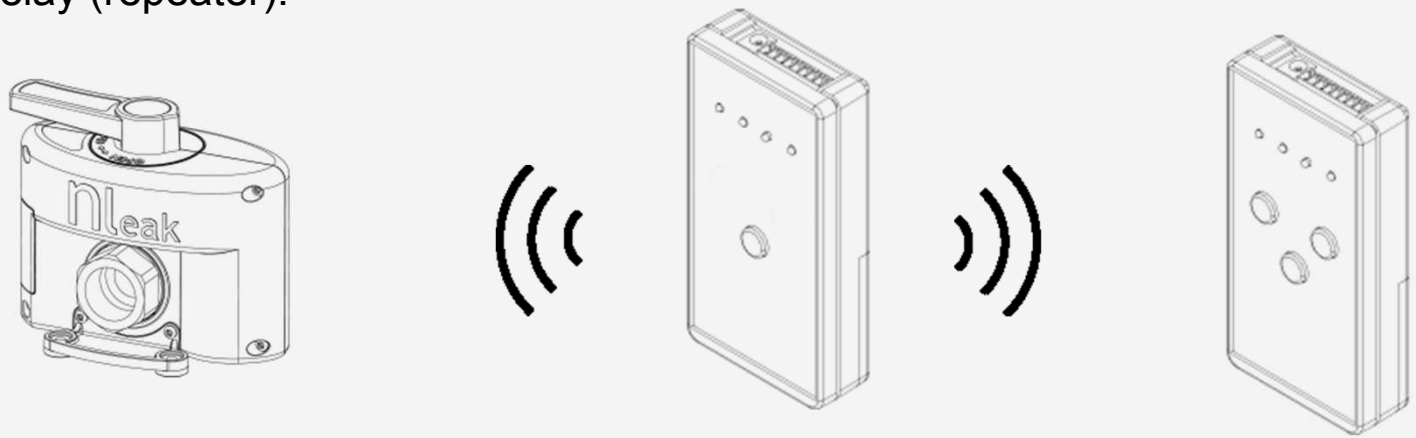

Triple+

Places where the detector should **NOT** be positioned

- Within a metal cabinet
- Where dirt or a foreign object may obstruct the valve's operation.
- Where the temperature exceeds the range between 0 and 55 degrees centigrade.
- Where there is an apprehension of being hit or damaged.
- In an external place where exposed to rain and direct sunlight and/or to the elements, the unit should be installed in a watertight plastic casing.
- In humid environment

Shut Off unit installation stages

1. Locate the most suitable place for installation on the water line.
2. Shut down the water supply, using the main valve of the building or site.
3. Dismantle the water line connectors in a way that would leave a gap suitable for installing the valve.
4. Install the unit on the water line.
5. Should a flexible water pipe be required to mount the Shut Off unit on the wall, dismantle the base unit.
6. Make sure that the Shut Off unit can be opened and closed manually.
7. Enable passage of water in the main line and prevent leaks or drippings.
8. Ensure easy access to the battery housing.
9. If unit wetting is probable, install an external protective casing.

Triple+

Controller unit

The button controller allows the user to trigger the wireless opening and closing of the valve manually.
In addition, there is an option of a direct connection to an alarm system. In this case the closure of the valve will be synchronized with the alarm triggering.

1A. Valve closing button.
1B. Technician button.
1C. Valve opening button
3A. Water battery indicator
5. 5VDC power input

3B. Water valve indicator.
3C. Communications light.
3D. Voltage indicator
4. Alarm wiring connector

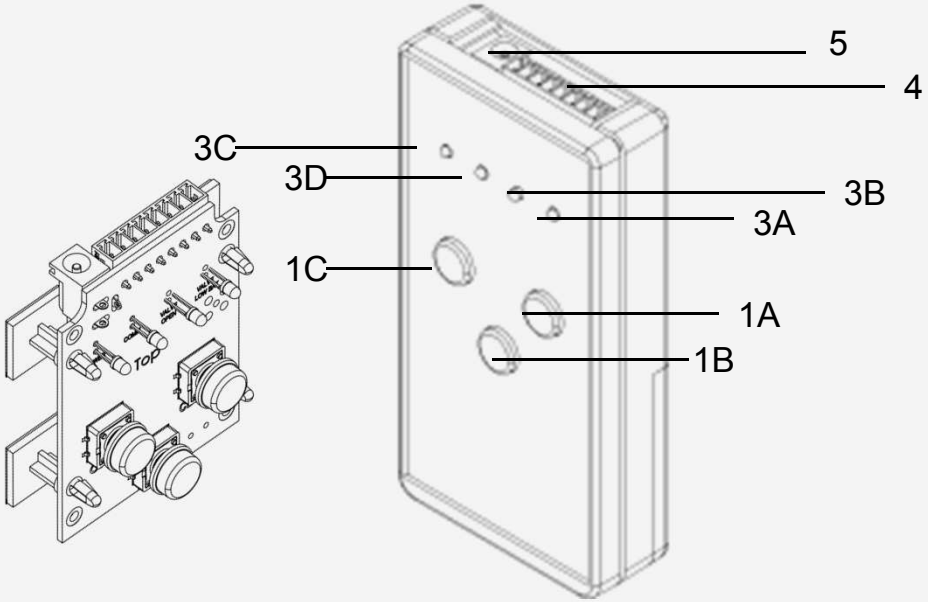

Triple+

System synchronization: valve - controller synchronization table

	OPERATION	Location	Control indication
1	I. Shift the valve handle to the open position. II. Insert two CR123 batteries into the Shut Off unit (valve.)	A water valve that is installed on the main water line	I. A green indicator lights up within the battery housing. II. The valve performs an opening action and then a closing one. III. Wait for the conclusion of the engine's operation. IV. Ensure that the valve can be manually opened and closed.
2	Hook the controller to the main supply with the transformer.	Position the controller where measurements indicate qualitative and continuous transmission.	I. The four indicators flash 3 times. II. The voltage indicator flashes. III. Wait for approximately two minutes by the controller to ensure that the communication indicator is lit continuously (in addition to the flashing voltage indicator.) In case the communication indicator flashes or is turned off, a repeater should be installed within the system.
3	Press the technician button	Controller	After some thirty seconds, all four indicators will flash. The voltage and communication indicators are continuously on. After another thirty seconds, the open valve indicator indicates the valve's state (open or closed.)
4	Synchronization test: open and close the valve using the buttons	Controller	Check that the valve opens and closes accordingly. Make sure that the open valve indicator indicates the valve's state (open or closed.)

Triple+

System synchronization: valve - controller synchronization table

	OPERATION	Location	Control indication
1	I. Shift the valve handle to the open position. II. Insert two CR123 batteries into the disconnection unit (valve.)	A water valve that is installed on the main water line	I. A green indicator lights up within the battery housing. II. The valve performs an opening action and then a closing one. III. Wait for the conclusion of the engine's operation. IV. Ensure that the valve can be manually opened and closed.
2	Hook the repeater to the main supply with the transformer.	Position the repeater where measurements indicate qualitative and continuous transmission.	The four indicators flash 3 times. The voltage indicator flashes. Wait for approximately two minutes by the repeater to ensure that the indicator of communication with the valve is lit continuously (in addition to the flashing voltage indicator.) In case the communication indicator flashes or is turned off, the systems should be brought closer.
3	Hook the controller to the main supply with the transformer.	Position the controller where measurements indicate qualitative and continuous transmission from the valve and the controller.	The four indicators flash 3 times. The voltage indicator flashes. Wait for approximately two minutes by the controller to ensure that the communication indicator is lit continuously (in addition to the voltage indicator.)
4	Ensuring qualitative and continuous communication between the system's components.	Repeater	Make sure that the green indicator lights are continuously on (voltage will be flashing, valve and controller communications will be continuously on.)

System synchronization: valve-repeater-controller synchronization table

	OPERATION	Location	Control indication
5	Press the technician button	Repeater	After some thirty seconds, all four indicators will flash. Make sure that the green indicator lights are continuously on (voltage, valve communication and controller communication.)
6	Ensure valve indication transfer	CONTROL	After another thirty seconds, the open valve indicator indicates the valve's state (open or closed.)
7	Hook the controller to the main supply with the transformer.	CONTROL	Check that the valve opens and closes accordingly. Make sure that the open valve indicator indicates the valve's state (open or closed.)

System synchronization: flood detector - controller synchronization table

	OPERATION	Location	Control indication
1	Press the valve "Open" and "Close" buttons simultaneously.	CONTROL	Red indicator - valve battery is continuously on. Green indicator - voltage flashing.
2	Open the battery cover and insert two AA batteries into the flood detector.	Position the flood detector where measurements indicate qualitative and continuous transmission from the valve and the controller.	I. The green detector indicator will flash every 5 seconds. II. Wait 60 seconds, while looking at the detector indication light. When the indicator light will light up for two consecutive seconds, the detector will synchronize itself with the controller. III. The green detector indicator will flash every minute. IV. Now you can continue with this procedure to up to 10 detectors per system.
3	Conclusion of the flood detector synchronization will be achieved by pressing the valve "Open" and "Close" buttons simultaneously.	Flood detector.	The controller will indicate voltage, communication and valve status (if synchronized with the system.)
4	Synchronization test: expose the detector to water (wetting the electrodes would suffice.)	Flood detector. Controller.	I. Detect a double flashing indication in the flood detector light. II. Detect a flashing indication in the red valve battery light in the controller. III. Ensure that the valve was closed (if synchronized to the system.) Pressing the "Open valve" button will return the system to routine state.

Note: adding detectors to the systems does not require resynchronization.
Subtraction or replacement of a detector required resynchronization of all the detectors connected to the controller.

Triple+

Synchronization reset (Hard reset)

Pressing five consecutive times will lead to disconnection between the system's components.

Reset of the valve is possible by pressing five consecutive times the technician button in the controller, while pressing the "Open" and "Close" buttons simultaneously and pressing five consecutive times the technician button in the controller.

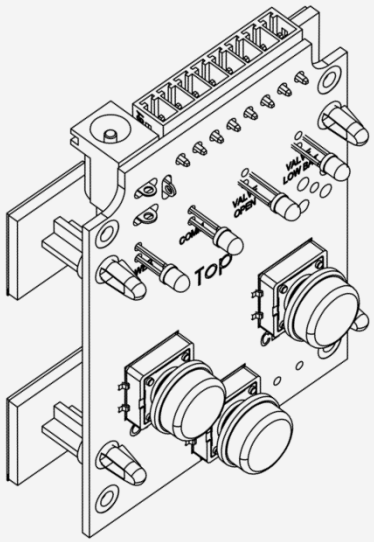

Triple+

Additional clarifications regarding the installation of the flood detector

1. A technician must visit the installation site before performing a hard reset to identify the nature of the communication with a tester/ installation instructions/ common sense.
2. The system controller will not work with batteries but by way of electricity transformer.
3. The controller should not be connected to an alarm system.
4. The positioning of the system's components (including of the water valve and controller) may be influenced by communication quality factors.
5. A repeater should not be installed between the controller and the flood detector.

Replacement of the disconnection unit (valve)

1. Take the batteries out of the faulty unit that is being replaced.
2. Reset the controller (press HARD RESET five times.)
3. Dismantle the unit from the water line and perform all the stages specified in the disconnection unit installation instruction.
4. Synchronize the controller - valve system.

   The detectors retain synchronization with the controller.

Triple+

Controller replacement

1. Disconnect the transformer from the faulty control box to be replaced.
2. Pull the control box out of its place.
3. Perform all the control unit installation stages.
4. Perform a full synchronization process (including extraction, pause and replacement of the batteries in the valve) and full synchronization with all the flood detectors.

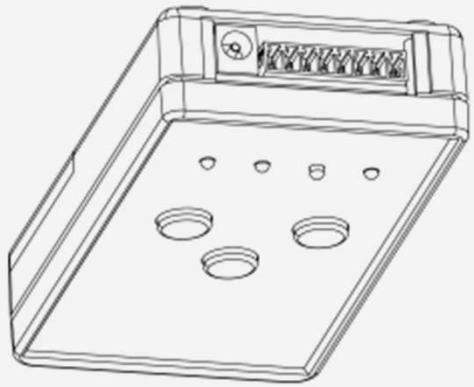

Triple+

Replacement of a battery in the Shut Off unit (valve)

1. Extract two CR123 batteries out of the unit and replace with new ones.
2. Verify system synchronization by closing and opening the valve using the controller buttons.

Triple+

System failure indication table

	OPERATION	Location	Control indication
1	No communication	Communications light flashing or off.	1. Check the battery voltage in the flood detector. 2. Consider narrowing the transmission distance. 3. Considering adding a relay (repeater.)
2	Valve fault	All the indicator, apart for the voltage, flash twice or three times every 15 seconds	1. Make sure there are no obstructions in the valve's opening and closing path. 2. Open and close the valve using the controller buttons 3. Extract and replace the batteries in the valve and check the fault status. 4. Replace the valve.
3	Low water battery	Valve battery indicator is continuously on.	Replace the valve battery
4	The circuit does not receive power	Voltage indicator is off.	1. Check the power connection. 2. Replace the controller/ repeater 3. Synchronize the system.
5	Valve is in an intermediate position	Water valve indicator is flashing	1. Close or open the valve if required. 2. Return to stage No. 2

Triple+

FCC Statement

NOTE:

This equipment has been tested and found to comply with the limits for a Class B digital device, pursuant to part 15 of the FCC Rules. These limits are designed to provide reasonable protection against harmful interference in a residential installation. This equipment generates, uses and can radiate radio frequency energy and, if not installed and used in accordance with the instructions, may cause harmful interference to radio communications. However, there is no guarantee that interference will not occur in a particular installation. If this equipment does cause harmful interference to radio or television reception, which can be determined by turning the equipment off and on, the user is encouraged to try to correct the interference by one or more of the following measures:
-Reorient or relocate the receiving antenna.
-Increase the separation between the equipment and receiver.
-Connect the equipment into an outlet on a circuit different from that to which the receiver is connected.
-Consult the dealer or an experienced radio/TV technician for help.

Cet équipement a été testé et jugé conforme aux limites s'appliquant à un appareil numérique de classe B, conformément à la Partie 15 des réglementations de la FCC. Ces limites ont été élaborées pour offrir une protection raisonnable contre les interferences nuisibles dans une installation résidentille.
Cet équipement génère, utilize et peut émettre de l'énergie de fréquence radio et, s'il n'est pas installé et utilize conformément aux instructions du fabricant, peut provoquer des interférences dangereuses pour les communications radio. Toutefois, rien ne garantit l'absence d'interférences dans une installation particuliére**. Si cet** équipement provoque des interférences nuisibles au niveau de la réception radio ou television, ce qui peut étre determine par la mise hors, puis sous tension de l'équipment, vous étes invite à essayer de corriger les interferences en pregnant les mesures suivantes:
-Réorientez ou déplaces l'antenne réceptrice.
-Augmentez la distance qui sépare l'équipement et le récepteur.
-Branchez l'équipement à une prise d'un circuit different de celui auquel est branché le récepteur.
-Consultez le revendeur ou un technician radio/television expérimenté pour obtenir de l'aide.

Changes or modifications to this equipment not expressly approved by the party responsible for compliance (TriplePlus Ltd.) could void the user's authority to operate the equipment.

FCC Disclaimer

Manufacturer: Triple Plus Ltd.

This device complies with Part 15 of the FCC Rules.

Operation is subject to the following two conditions:

(1) This device may not cause harmful interference, and
(2) this device must accept any interference received, including interference that may cause undesired operation.

Le présent appareil est conforme aux CNR d'Industrie Canada applicables aux appareils radio exempts de licence.

L'exploitation est autorisée aux deux conditions suivantes :
(1) l'appareil ne doit pas produire de brouillage, et
(2) l'utilisateur de l'appareil doit accepter tout brouillage radioélectrique subi, même si le brouillage est susceptible d'en compromettre le fonctionnement.