# WT32C3-S6 Datasheet

wireless-tag

V1.0.2

July 11, 2021

Wireless-Tag Technology Co., Ltd.

 Copyright ©2020 Wireless-Tag Technology Co., Ltd. All Rights Reserved. 

# About this document

This document provides users with the technical specifications for WT32C3-S6.

# Document updates

Please visit Wireless-Tag's official website to download the latest version of the document.

# Revision history

Please go to the document revision history page to view the revisions of the document.

**Disclaimer and copyright notice**

Information in this paper, including URL references, is subject to change without prior notice.
This document is provided "as is" with no warranties whatsoever, including any warranty of merchantability, non-infringement, fitness for any particular purpose, or any warranty otherwise arising out of any proposal, specification or sample. All liability, including liability for infringement of any patent rights, relating to use of information in this document is disclaimed. No licenses, either express or implied, by estoppel or otherwise, to any intellectual property rights are granted herein.
All trade names, trademarks and registered trademarks mentioned in this document are property of their respective owners, and are hereby acknowledged.
Copyright © 2020 Wireless-Tag Technology Co., Ltd. All rights reserved.

**Statement**

Due to product version upgrade or other reasons, the contents of this manual may be changed. Wireless-Tag Technology Co., Ltd reserves the right to modify the contents of this manual without any notice or prompt. This manual is only used as a guide. Wireless-Tag Technology Co., Ltd makes every effort to provide accurate information in this manual, but it does not guarantee that the contents of the manual are completely free of errors. All statements, information and suggestions in this manual do not constitute any express or implied guarantee.

# Revision History

| No. | Version | Changes | Change (+/-) Descriptions | Author | Date |
|---|---|---|---|---|---|
| 1 | V1.0.0 | C | Created the document | Fiona | January 15, 2021 |
| 2 | V1.0.1 | A | Added electrical characteristics and application note | Fiona | June 11, 2021 |
| 3 | V1.0.2 | A | Added current consumption | Fiona | July 11, 2021 |
| | | | | | |
| | | | | | |
| | | | | | |
| | | | | | |

*Changes：C——create，A——add，M——modify，D——delete

wireless-tag

 Copyright ©2020 Wireless-Tag Technology Co., Ltd. All Rights Reserved. 

# Contents

1 Overview ..... 1
2 Features ..... 2
3 Hardware Specifications ..... 3
3.1 Block Diagram ..... 3
3.2 Pin Descriptions ..... 3
3.3 Strapping Pins ..... 4
4 Electrical Characteristics ..... 6
4.1 Absolute Maximum Ratings ..... 6
4.2 Recommended Operating Conditions ..... 6
5 Application Note ..... 7
5.1 Module Dimensions ..... 7
5.2 Reflow Profile ..... 7
5.3 Module Schematics ..... 8
5.4 Peripheral Schematic ..... 9
6 Product Trial ..... 10

wireless-tag

# 1 Overview

WT32C3-S6 WiFi module is a low-power, cost-effective embedded wireless network control module, which is an ideal choice for smart grid, building automation, security system, smart home, telemedicine and other IoT applications.

The module's core processor ESP32-C3 integrates an industry-leading 32-bit RISC-V single-core microprocessor with a maximum clock speed of 160 MHz in a small-sized package. It comes with an on-board PCB antenna.

The module supports for the standard IEEE802.11 b/g/n protocol and Bluetooth Low Energy 5.0 (Bluetooth LE): Bluetooth 5, Bluetooth mesh. The module can be used to help Bluetooth pairing and network connection to existing devices, or build an independent network controller.

wireless-tag

Copyright ©2020 Wireless-Tag Technology Co., Ltd. All Rights Reserved.

# 2 Features

- SMD-16 package
- On-board PCB antenna
- Operating voltage: 3.3V
- Operating ambient temperature: -20-85°C
- ESP32-C3 chip embedded, 32-bit RISC-V single-core microprocessor, up to 160MHz
  - SRAM 400KB
  - RTC SRAM 8KB
  - ROM 384KB
- Embedded Flash 4MB
- System

**WIFI**

- IEEE 802.11 b/g/n protocol
- 1T1R mode with data rate up to 150 Mbps
- WIFI @2.4 GHz, support for WEP/WPA-PSK/WPA2-PSK security mode
- Frame aggregation (TX/RX A-MPDU, RX A-MSDU)

**BLE**

- Bluetooth Low Energy 5.0(Bluetooth LE): Bluetooth 5, Bluetooth mesh
- Speed: 125 Kbps, 500 Kbps, 1 Mbps, 2 Mbps
- Advertising Extensions
- Multiple Advertisement Sets
- Channel Selection Algorithm #2

**Hardware**

- Support for GPIO, SPI, UART, I2C, I2S, infrared transceiver, LED PWM controller, USB JTAG interface, general DMA controller, TWAITM controller (compatible with ISO11898-1), temperature sensor, SAR ADC
- Support for STA/AP/STA+AP mode
- Support for remote OTA

wireless-tag

Copyright ©2020 Wireless-Tag Technology Co., Ltd. All Rights Reserved.

# 3 Hardware Specifications

## 3.1 Block Diagram

**Figure 1 Block Diagram**

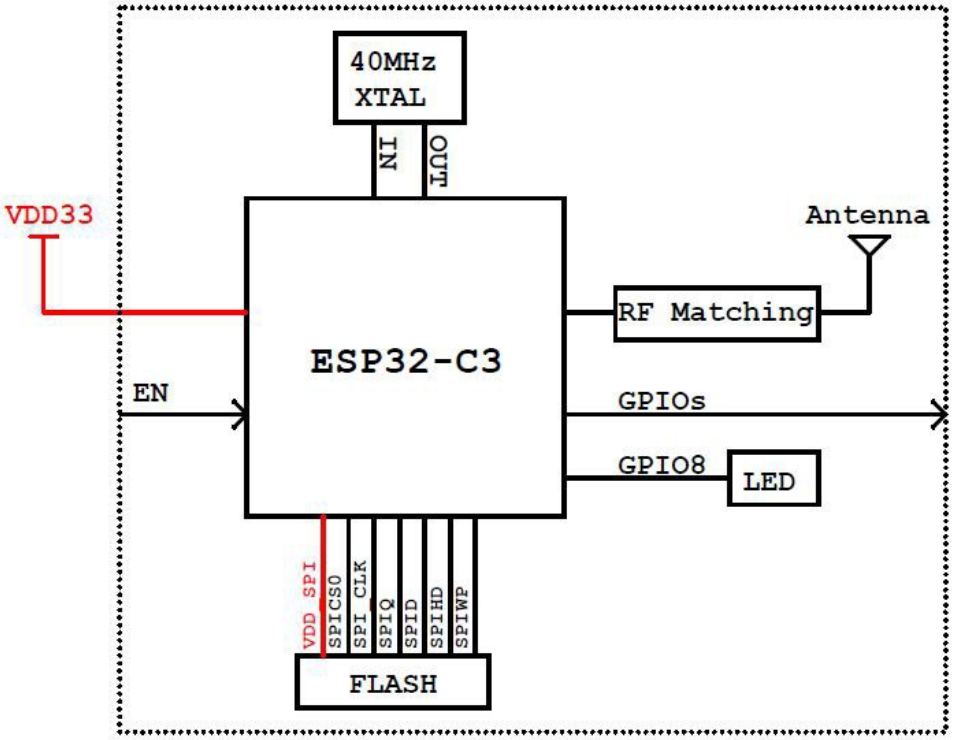


## 3.2 Pin Descriptions

**Figure 2 Pin Layout**

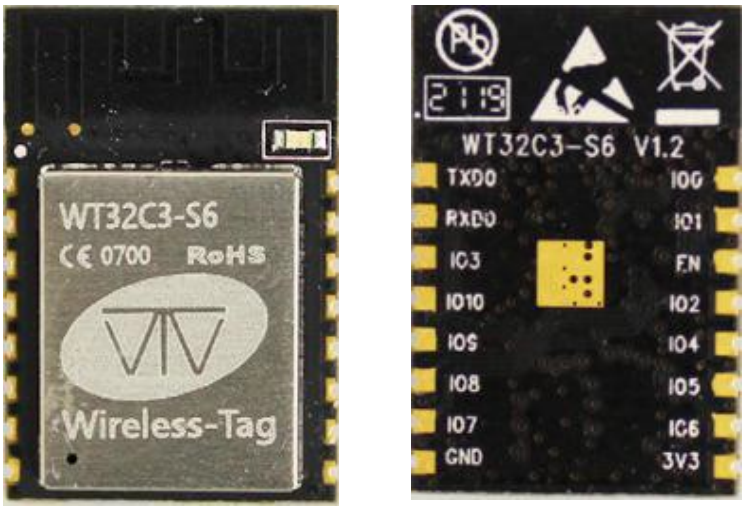


Copyright ©2020 Wireless-Tag Technology Co., Ltd. All Rights Reserved.

**Table 1 Pin Definitions and Descriptions**

| Pin | Name | Description |
|---|---|---|
| 1 | IO0 | GPIO0，ADC1_CH0，XTAL_32K_P (32.768 kHz crystal input) |
| 2 | IO1 | GPIO1，ADC1_CH1，XTAL_32K_N (32.768 kHz crystal output) |
| 3 | EN | Chip Enable pin:<br>High level: on, enables the chip.<br>Low level: off, low current.<br>Note: Do not leave the EN pin floating. |
| 4 | IO2 | GPIO2，ADC1_CH2，FSPIQ |
| 5 | IO4 | GPIO4，MTMS，ADC1_CH4，FSPIHD |
| 6 | IO5 | GPIO5，MTDI，ADC2_CH0，FSPIWP |
| 7 | IO6 | GPIO6，MTCK，FSPICLK |
| 8 | VCC | 3.3V power supply; The output current delivered by the external power supply is recommended to be above 500mA |
| 9 | GND | GND |
| 10 | IO7 | GPIO7，MTDO，FSPID |
| 11 | IO8 | GPIO8 |
| 12 | IO9 | GPIO9 |
| 13 | IO10 | GPIO10，FSPICS0 |
| 14 | IO3 | GPIO3, ADC1_CH3 |
| 15 | RXD0 | U0RXD，GPIO20 |
| 16 | TXD0 | U0TXD，GPIO21 |

Wireless-tag

## 3.3 Strapping Pins

ESP32-C3 series has three strapping pins.

- GPIO2
- GPIO8
- GPIO9

Software can read the strapping values of these pins in “GPIO_STRAPPING” register.

During the chip’s system reset(power-on-reset, RTC watchdog reset, brownout reset, analog super watchdog reset, crystal clock glitch detection reset), the latches of the strapping pins sample the voltage level as strapping bits of “0” or “1”, and hold these bits until the chip is powered down or shut down.

By default, GPIO9 is connected to the internal pull-up resistor. If GPIO9 is not connected or connected to an external high-impedance circuit, the latched bit value will be “1”.

To change the strapping bit values, you can apply the external pull-down/pull-up resistances, or use the

Copyright ©2020 Wireless-Tag Technology Co., Ltd. All Rights Reserved.

host MCU's GPIOs to control the voltage level of these pins when powering on ESP32-C3 family. After reset, the strapping pins work as normal-function pins.

Refer to Table 2 for a detailed boot-mode configuration of the strapping pins.

Note:

Some pins have been internally pulled up, please refer to the schematic diagram.

**Table 2 Strapping Pins**

| Booting Mode [1] | | | |
|---|---|---|---|
| **Pin** | **Default** | **SPI Boot** | **Download Boot** |
| GPIO2 | N/A | 1 | 1 |
| GPIO8 | N/A | Don't care | 1 |
| GPIO9 | Internal pull-up | 1 | 0 |
| **Enabling/Disabling ROM Code Print During Booting** | | | |
| **Pin** | **Default** | **Functionality** | |
| GPIO8 | N/A | When the value of eFuse field UART_PRINT_CONTROL is<br>0, print is enabled and not controlled by GPIO8.<br>1, if GPIO8 is 0, print is enabled; if GPIO8 is 1, it is disabled.<br>2, if GPIO8 is 0, print is disabled; if GPIO8 is 1, it is enabled.<br>3, print is disabled and not controlled by GPIO8. | |
| **Parameter Descriptions of Setup and Hold Times for the Strapping Pin** | | | |
| **Parameter** | **Description** | | **Min** |
| t0 | Setup time before CHIP_EN goes from low to high | | 0ms |
| t1 | Hold time after CHIP_EN goes high | | 3ms |

Figure 3 shows the setup and hold times for the strapping pin before and after the CHIP_EN signal goes high.

**Figure 3 Setup and Hold Times for the Strapping Pin**

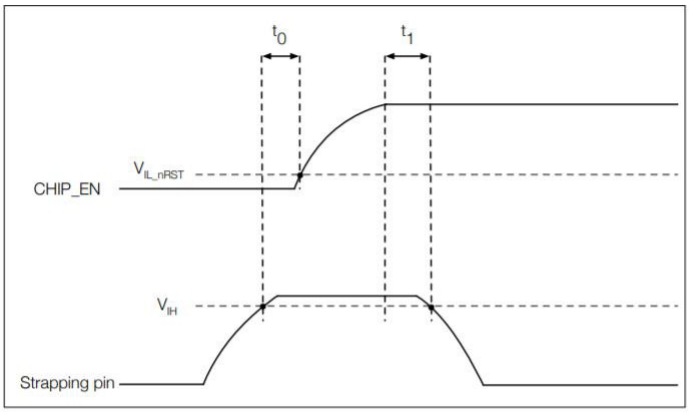


Note: 1. The strapping combination of GPIO8 = 0 and GPIO9 = 0 is invalid.

Copyright ©2020 Wireless-Tag Technology Co., Ltd. All Rights Reserved.

# 4 Electrical Characteristics

## 4.1 Absolute Maximum Ratings

Stresses above those listed in Absolute Maximum Ratings may cause permanent damage to the device. These are stress ratings only and functional operation of the device at these or any other conditions beyond those indicated under Recommended Operating Conditions is not implied. Exposure to absolute-maximum-rated conditions for extended periods may affect device reliability.

## 4.2 Recommended Operating Conditions

**Table 3 Operating Conditions**

| Symbol | Parameter | | Min | Typ | Max | Unit |
|---|---|---|---|---|---|---|
| VDD | Power supply voltage | | 3.0 | 3.3 | 3.6 | V |
| $I_{VDD}$ | Current delivered by external power supply | | 0.5 | - | - | A |
| $T_A$ | Ambient temperature | 85°C version | -40 | - | 85 | ℃ |
| | | 105°C version | | | 105 | |
| Humidity | Humidity condition | | - | - | 85 | %RH |

**Table 4 Current Consumption Depending on RF Modes**

| Work mode | Description | | Peak（mA） |
|---|---|---|---|
| Active(RF working) | TX | 802.11b, 1 Mbps, @19.5dBm | 384 |
| | | 802.11g, 54 Mbps, @16.4dBm | 287 |
| | | 802.11n, HT20, MCS 7, @16 dBm | 275 |
| | | 802.11n, HT40, MCS 7, @16 dBm | 260 |
| | RX | 802.11b/g/n, HT20 | 83 |
| | | 802.11n, HT40 | 86 |

Note:

Ambient temperature, 3.3V power supply, TX continues mode, DC power accuracy: 100 μA.

**Table 5 Current Consumption Depending on Work Modes**

| Work mode | Description | | Typical value |
|---|---|---|---|
| Modem-sleep | The CPU is powered on | 160MHz | 25.8mA |
| | | 80MHz | 22.7mA |
| Light-sleep | | | 0.3mA |
| Deep-sleep | | | 14uA |
| Power off | EN is set to low level | | 0 |

Copyright ©2020 Wireless-Tag Technology Co., Ltd. All Rights Reserved.

# 5 Application Note

## 5.1 Module Dimensions

**Figure 4 Module Dimensions**

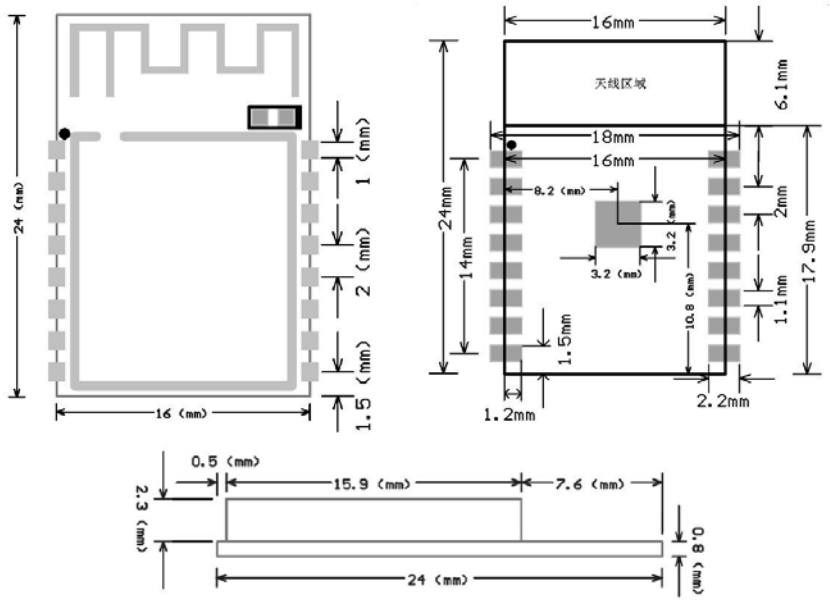


## 5.2 Reflow Profile

**Figure 5 Reflow Profile**

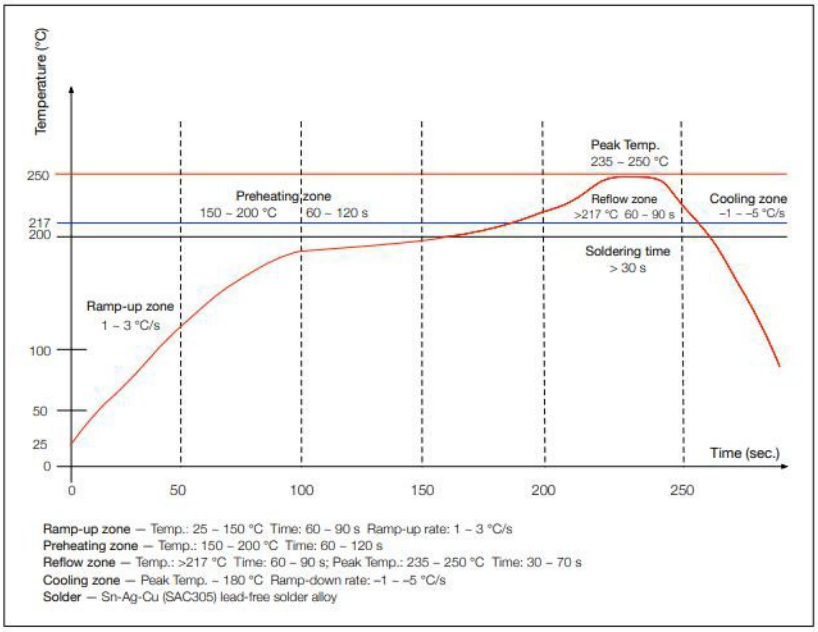


Copyright ©2020 Wireless-Tag Technology Co., Ltd. All Rights Reserved.

## 5.3 Module Schematics

**Figure 6 Module Schematics**

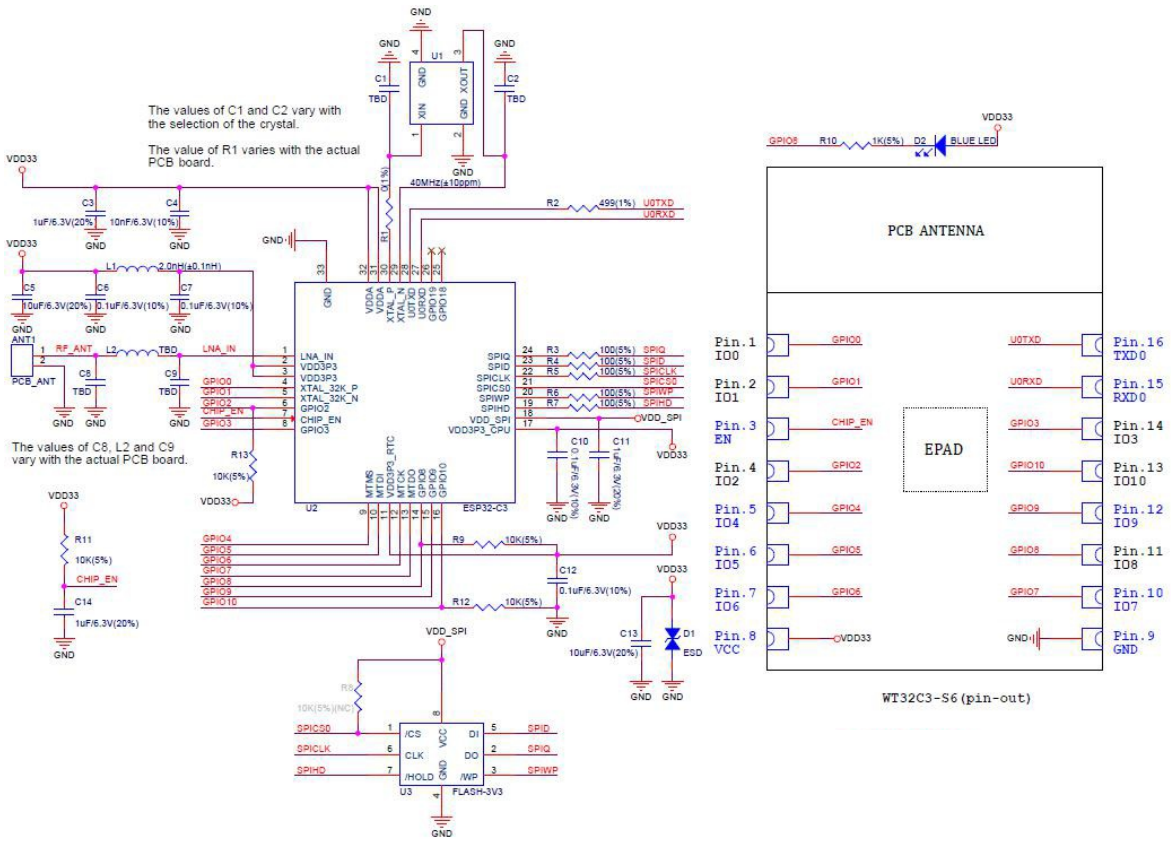

## 5.4 Peripheral Schematic

This is the typical application circuit of the module connected with peripheral components (for example, power supply, antenna, reset button, JTAG interface, and UART interface).

**Figure 7 Application Circuit**

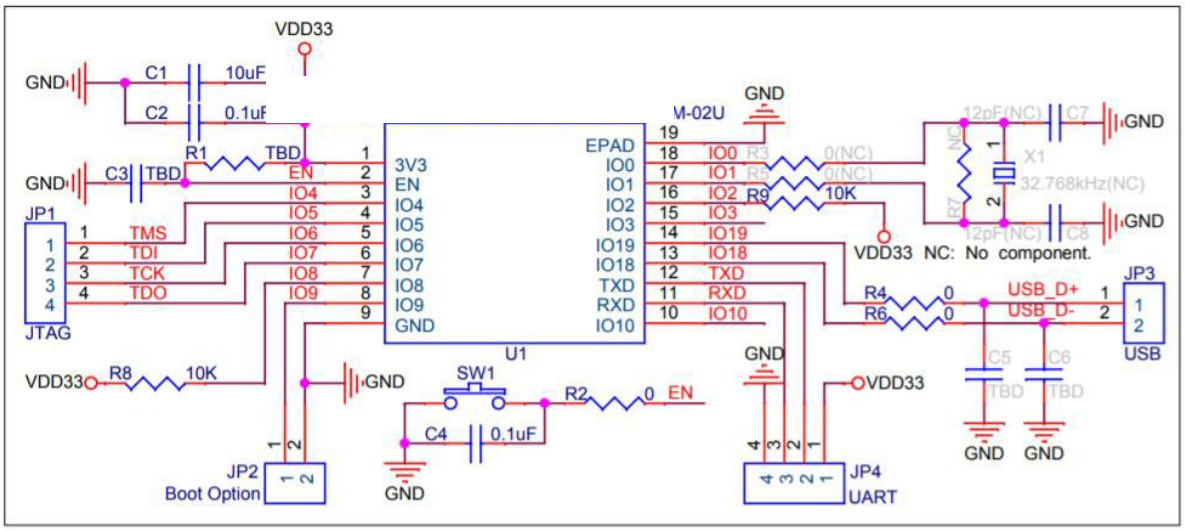


- Soldering the EPAD to the ground of the base board is not a must, though doing so can get optimized thermal performance. If you do want to solder it, please ensure that you apply the correct amount of soldering paste.
- To ensure the power supply to the ESP32-C3 family chip is stable during power-up, it is advised to add an RC delay circuit at the EN pin. The recommended setting for the RC delay circuit is usually R = 10 kΩ and C = 1 μF. However, specific parameters should be adjusted based on the power-up timing of the module and the power-up and reset sequence timing of the chip.

Copyright ©2020 Wireless-Tag Technology Co., Ltd. All Rights Reserved.

# 6 Product Trial

- Sales email：sales@wireless-tag.com
- Technical support email：technical@wireless-tag.com

wireless-tag

**Federal Communication Commission Statement (FCC, U.S.)**

This equipment has been tested and found to comply with the limits for a Class B digital device, pursuant to Part 15 of the FCC Rules. These limits are designed to provide reasonable protection against harmful interference in a residential installation. This equipment generates, uses and can radiate radio frequency energy and, if not installed and used in accordance with the instructions, may cause harmful interference to radio communications. However, there is no guarantee that interference will not occur in a particular installation. If this equipment does cause harmful interference to radio or television reception, which can be determined by turning the equipment off and on, the user is encouraged to try to correct the interference by one of the following measures:

- Reorient or relocate the receiving antenna.
- Increase the separation between the equipment and receiver.
- Connect the equipment into an outlet on a circuit different from that to which the receiver is connected.
- Consult the dealer or an experienced radio/TV technician for help.

This device complies with Part 15 of the FCC Rules. Operation is subject to the following two conditions: (1) This device may not cause harmful interference, and (2) this device must accept any interference received, including interference that may cause undesired operation.

**FCC Caution:**

Any changes or modifications not expressly approved by the party responsible for compliance could void the user's authority to operate this equipment.

**FCC Radiation Exposure Statement:**

This equipment complies with FCC radiation exposure limits set forth for an uncontrolled environment. This equipment should be installed and operated with minimum distance 20cm between the radiator & your body.

**IMPORTANT NOTES**

**Co-location warning:**

This transmitter must not be co-located or operating in conjunction with any other antenna or transmitter.

**OEM integration instructions:**

This device is intended only for OEM integrators under the following conditions:

The transmitter module may not be co-located with any other transmitter or antenna. The module shall be only used with the external antenna(s) that has been originally tested and certified with this module.

As long as the conditions above are met, further transmitter test will not be required. However, the OEM integrator is still responsible for testing their end-product for any additional compliance requirements required with this module installed (for example, digital device emissions, PC peripheral requirements, etc.).

wireless-tag

Copyright ©2020 Wireless-Tag Technology Co., Ltd. All Rights Reserved.

**Validity of using the module certification:**

In the event that these conditions cannot be met (for example certain laptop configurations or co-location with another transmitter), then the FCC authorization for this module in combination with the host equipment is no longer considered valid and the FCC ID of the module cannot be used on the final product. In these circumstances, the OEM integrator will be responsible for re-evaluating the end product (including the transmitter) and obtaining a separate FCC authorization.

**End product labeling:**

The final end product must be labeled in a visible area with the following: “Contains Transmitter Module FCC ID: 2AFOS-WT32C3-S6”.

**Information that must be placed in the end user manual:**

The OEM integrator has to be aware not to provide information to the end user regarding how to install or remove this RF module in the user's manual of the end product which integrates this module. The end user manual shall include all required regulatory information/warning as show in this manual.

**Integration instructions for host product manufactures according to KDB 996369 D03 OEM Manual v01**

**2.2 List of applicable FCC rules**

FCC Part 15 Subpart C 15.247 & 15.207 & 15.209

**2.3 Specific operational use conditions**

The module is a Bluetooth module with WiFi & BLE 2.4G function.

**WiFi Specification：**

Operation Frequency: 2412~2462MHz
Number of Channel: 11
Modulation: DSSS, OFDM
Type: PCB Antenna
Gain: 2 dBi

**BLE Specification：**

Operation Frequency: 2402~2480MHz
Number of Channel: 40
Modulation: GFSK
Type: PCB Antenna
Gain: 2 dBi

wireless-tag

Copyright ©2020 Wireless-Tag Technology Co., Ltd. All Rights Reserved. 

The module can be used for mobile or applications with a maximum 2 dBi antenna. The host manufacturer installing this module into their product must ensure that the final composit product complies with the FCC requirements by a technical assessment or evaluation to the FCC rules, including the transmitter operaition. The host manufacturer has to be aware not to provide information to the end user regarding how to install or remove this RF module in the user's manual of the end product which integrates this module. The end user manual shall include all required regulatory information/warning as show in this manual.

**2.4 Limited module procedures**

Not applicable.

**2.5 Trace antenna designs**

Not applicable. The module has its own antenna, and doesn’t need a host’s printed board microstrip trace antenna etc.

**2.6 RF exposure considerations**

The module must be installed in the host equipment such that at least 20cm is maintained between the antenna and users’ body; and if RF exposure statement or module layout is changed, then the host product manufacturer required to take responsibility of the module through a change in FCC ID or new application. The FCC ID of the module cannot be used on the final product. In these circumstances, the host manufacturer will be responsible for re-evaluating the end product (including the transmitter) and obtaining a separate FCC authorization

**2.7 Antennas**

Antenna Specification are as follows:

Type: PCB Antenna

Gain: 2 dBi

This device is intended only for host manufacturers under the following conditions:

The transmitter module may not be co-located with any other transmitter or antenna;

The module shall be only used with the internal antenna(s) that has been originally tested and certified with this module. The antenna must be either permanently attached or employ a ‘unique’ antenna coupler.

As long as the conditions above are met, further transmitter test will not be required. However, the host manufacturer is still responsible for testing their end-product for any additional compliance requirements required with this module installed (for example, digital device emissions, PC peripheral requirements, etc.)

Copyright ©2020 Wireless-Tag Technology Co., Ltd. All Rights Reserved.

**2.8 Label and compliance information**

Host product manufacturers need to provide a physical or e-label stating “Contains Transmitter Module FCC ID: 2AFOS-WT32C3-S6” with their finished product.

**2.9 Information on test modes and additional testing requirements**

**BLE**

Operation Frequency: 2402~2480MHz
Number of Channel: 40
Modulation: GFSK

**WIFI**

Operation Frequency: 2412~2462MHz
Number of Channel: 11
Modulation: DSSS, OFDM

Host manufacturer must perfom test of radiated & conducted emission and spurious emission, etc according to the actual test modes for a stand-alone modular transmitter in a host, as well as for multiple simultaneously transmitting modules or other transmitters in a host product.
Only when all the test results of test modes comply with FCC requirements, then the end product can be sold legally.

**2.10 Additional testing, Part 15 Subpart B disclaimer**

The modular transmitter is only FCC authorized for FCC Part 15 Subpart C 15.247 & 15.207 & 15.209 and that the host product manufacturer is responsible for compliance to any other FCC rules that apply to the host not covered by the modular transmitter grant of certification. If the grantee markets their product as being Part 15 Subpart B compliant (when it also contains unintentional radiator digital circuity), then the grantee shall provide a notice stating that the final host product still requires Part 15 Subpart B compliance testing with the modular transmitter installed.

wireless-tag

Copyright ©2020 Wireless-Tag Technology Co., Ltd. All Rights Reserved. 

Manufacturer's Name: Wireless-Tag Technology Co., Ltd
Sample Description: WIFI Module
Trade Mark: wireless-tag
Model number: WT32C3-S6

This device was tested for operations. To comply with RF exposure requirements, a minimum separation distance of 20cm must be maintained between the user's body and the charger, including the antenna. Third-party belt-clips, holsters, and similar accessories used by this device should not contain any metallic components. Accessories that do not meet these requirements may not comply with RF exposure requirements and should be avoided. Use only the supplied or an approved antenna.

This device in compliance with the essential requirements and other relevant provisions of Directive 2014/53/EU. All essential radio test suites have been carried out. This restriction will be applied to all Member States of European Union.

1. The device complies with RF specifications when the device used at 20cm form your body

Declaration of Conformity

Hereby, Wireless-Tag Technology Co., Ltd declares that the product type WT32C3-S6 is in compliance with Directives 2014/53/EU.

www.wireless-tag.com

RF specification:

| Function | Operation Frequency | Max RF Outputpower (dBm) | Limit (dBm) |
|---|---|---|---|
| 2.4G WIFI | 2412-2472MHz | 17.04 | 20 |
| BLE | 2402-2480MHz | 4.44 | 20 |

WIFI Module
Module: WT32C3-S6
Input:3.3V⎓0.5A
FCC ID: 2AFOS-WT32C3-S6

Wireless-Tag Technology Co., Ltd
801, Block A, Building 6, Shenzhen International Innovation Valley, Dashi 1st Road, Xili Community, Xili Street, Nanshan District, Shenzhen.
Importer: xxxxxxxx
Address: xxxxxxxxx

Copyright ©2020 Wireless-Tag Technology Co., Ltd. All Rights Reserved.