wireless–tag

WT5110-S2 Datasheet

Version of V1.0.5

Wireless-Tag Technology Co., Limited

This document provides users with the WT5110-S2 specifications.

Document version

Please go to the latest version of the official website

Revise the history

Please go to the document revision page to view the revision history

Disclaimers and copyright announcements

The information in this article, including the URL address for reference, is subject to change without notice.

The document is provided "as is" without any warranty liability, including any guarantee of merchantability, applicable to a particular use or non-infringement, and any guarantee of any proposal, specification or sample mentioned elsewhere. This document shall not be liable for any kind, including liability for the infringement of any patent right arising from the use of the information in this document. This document does not grant, by estoppel or otherwise, whether express or implied.

It is hereby stated that all trade names, trademarks and registered trademarks mentioned are the property of their respective owners.

Copyright belongs to © 2020 Wireless-tag. All rights reserved.

explain

The contents of this manual may change due to the product version upgrade or other reasons. Shenzhen Wireless-tag Cloud Technology Co., Ltd. reserves the right to modify the contents of this manual without any notice or prompt. This manual is only used as a guide, and the Shenzhen Wireless-tag Cloud Technology Co., Ltd. does its best to provide accurate information in this manual. However, the Shenzhen Wireless-tag Cloud Technology Co., Ltd. does not ensure that the contents of the manual are completely free from errors, and all statements, information and suggestions in this manual do not constitute any express or implied warranty.

Document revision record

No	version No	Change state	Description (+ / -)	Author	Date
1	V1.0.0	C	Create a document	Liang Sufang	2020-11-17
2	V1.0.1	M	Bluetooth name modification	Liang Sufang	2020-12-14
3	V1.0.2	M	make corrections	Fiona	2021-5-25
4	V1.0.3	M	Operating temperature modification	Zeng yayan	2022-12-5
5	V1.0.4	M	Modify the pin description	Zhong Qinglian g	2023-4-13
6	V1.0.5	M	Modify the typesetting	Dong Pengfei	2023-07-24

* Change status: C- -created, A —— increased, M —— modified, D —— deleted

wireless–tag

catalogue

1 Overview 1
2 module size diagram 2
3 Pound definition 3
3.1 Pin layout 3
3.2 Pin description 4
4. Peripheral application design and precautions 5
4.1 Power supply interface 5
4.1.1 Design Description of VCC 5
4.1.2 Notes for power supply design: 6
4.2 Control interface 6
4.2.1 P B14 6
4.2.2 NR ST 6
4.3 External interface 7
4.3.1 Serial port interface 7
4.3.2 Schematic design of serial port: 8
4.4 Notes for RF design: 8
4.5 module peripheral reference design 11
5 Electrical characteristics 11
6 patch notes 12
6.1 Steel mesh 12
6.2 Tin cream 12
6.3 Temperature curve of the patch furnace 12
7 Function instructions 14
7.1 Working mode 14
7.2 Supported BLE standards 14
7.3 Connectivity requirements 14
7.4 The MAC address format 15
7.5 Broadcast Payload convention 16
7.6 Bluetooth establishes the communication process convention process 17
7.7 Bluetooth power initialization process 17
7.8 The Bluetooth broadcast content of the circuit breaker 18

wireless–tag

1 summary

The WT5110-S2 is a high-performance, industrial-grade, low-power BLE module that supports a Bluetooth 5.1 full-protocol stack. It can be widely used in the energy industry, industrial control, automotive electronics, smart city and other scenarios.

- Industrial grade BLE SoC, supporting BLE 5.1 full protocol stack;
- Built-in high-speed memory FLASH: 512 kB, SRAM: 64 kB;
- Excellent electrostatic discharge (ESD) performance, HBM 4KV;
- Contains a 32-bit MCU kernel, with adjustable clock frequency, up to 64 MHz;
- RF RF performance index;

  The highest reception sensitivity of-105 dBm
  Maximum emission power of + 13 dBm
- Ultra-low power consumption design, and standby current under SRAM and RTC operation;
- Support all types of Profile defined by L2CAP, GAP, GATT, SMP and SIG organization;
- Integrated and rich peripherals, including complementary PWM output, capacitive touch interface, high-precision ADC, AES / DES / ECC safety unit, high-speed serial port, etc.;
- Small packaging, strong performance, wide application scenarios.

wireless-tag

2 Module size diagram

Figure 1 module dimensions

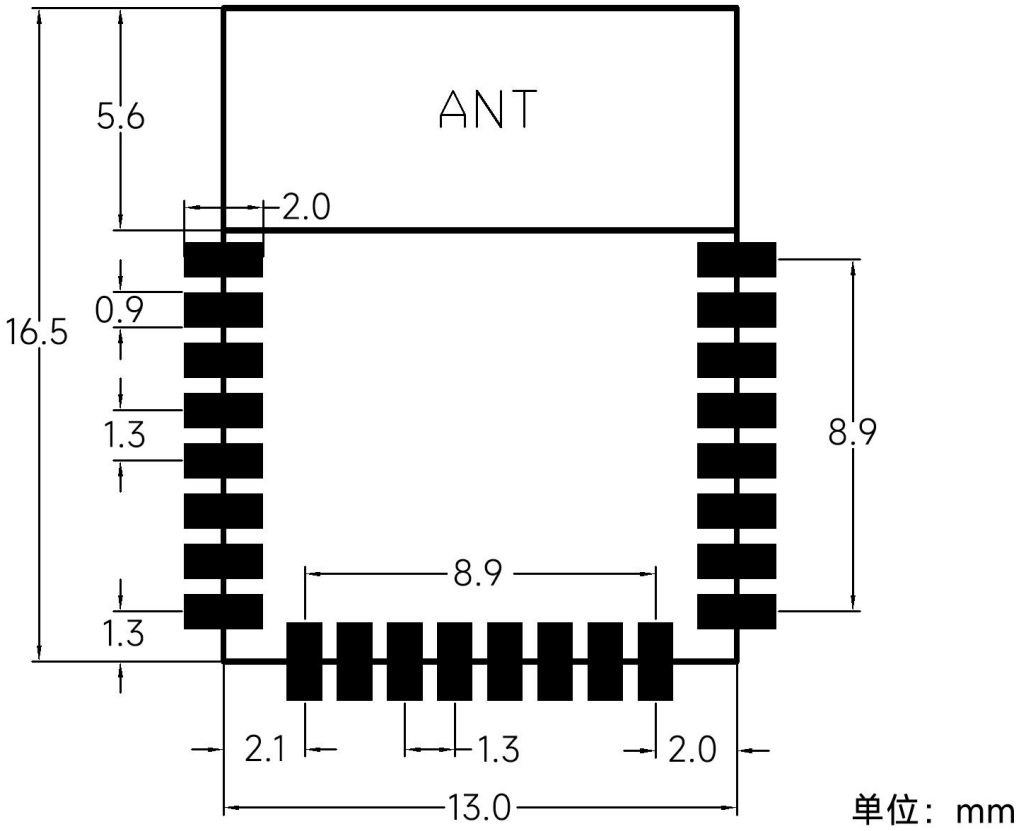

3 The pin definition

3.1 Pin layout

Figure 2 pin top view

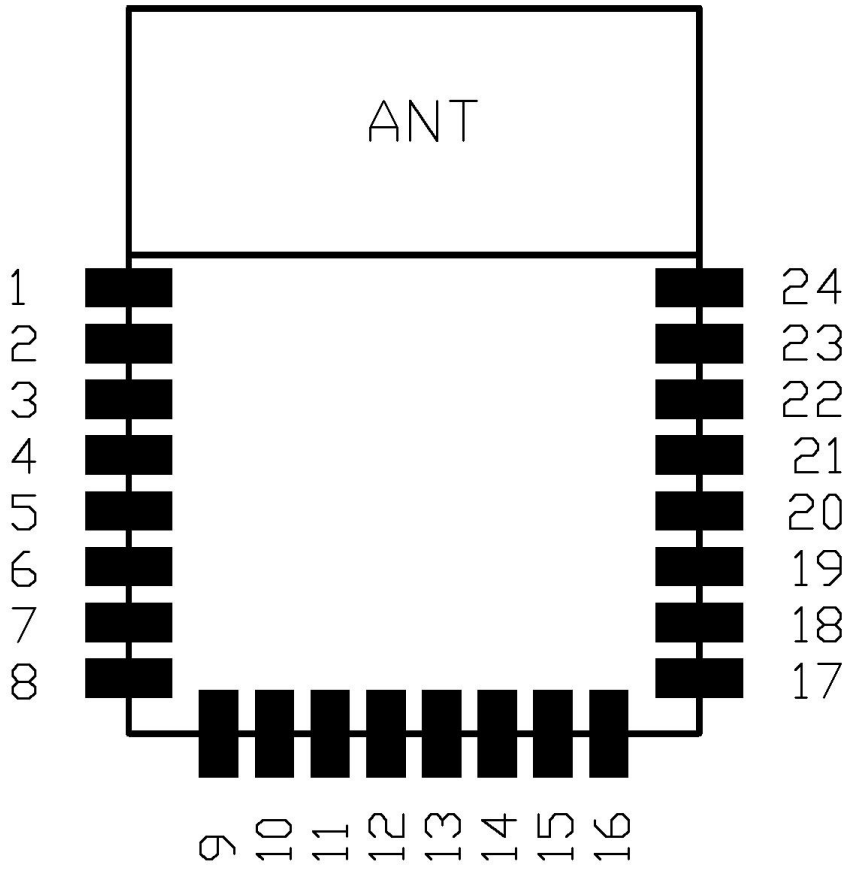

3.2 Pin description

There are 24 pins in the module, see Table 1 for specific description.

Table 1 Pin definitions

Pin	Name	description
1	P B12	GPIO/ADC channel 0
2	P B13	GPIO/ADC channel 1
3	P B14	GPIO (BOOT pin, high level required)
4	P B15	GPIO / sleep arousal
5	P A00	GPIO / ADC channel 4 / sleep arousal
6	P A01	GPIO/ADC channel 5
7	G ND	Module power supply
8	G ND	Module power supply
9	P A02	GPIO/ADC channel 6
10	P A07	GPIO / sleep arousal
11	P A08	GPIO
12	P A09	GPIO
13	P A13	GPIO
14	P A14	GPIO
15	P A15	GPIO
16	TXD	Serial transmission (TTL level)
17	VCC	Module power supply power input
18	RXD	Serial port reception (TTL level)
19	P B 05	GPIO (the default is SWDIO)
20	P B 06	GPIO (the default is SWCLK)
21	P B 08	G PIO
22	P B 09	G PIO
23	P B 10	G PIO
24	N R ST	Reset the input pin, low and valid

wireless-tag

4 Peripheral application design and precautions

The use of the WT5110-S2 module needs to meet the basic work requirements. This chapter will introduce how to design each functional interface circuit, precautions, and provide design reference.

4.1 Power interface

Power supply circuit design and layout, is a very important link in the whole product design, the quality of power supply design affects the performance of the whole product. Please read the power supply design requirements carefully and follow the correct power supply design principles to ensure that the optimal circuit performance is achieved.

Table 2. Power supply interface

Name	Pin	Description	Remark
VCC	17	Module power supply input	2.6-3.6V (Default: 3.3V)
GND	7、8	Module power supply input ground	Please ensure that all the ground pins are well grounded

4.1.1 VCC design notes

The power supply design consists of two parts: circuit design and PCB layout.

Power design

WT5110-S2 Power supply supports 2.6-3.3V power input (typical value 3.3V). Recommended power supply design suggestions are as shown in Figure Figure 3;

Figure 3. Recommended power supply design

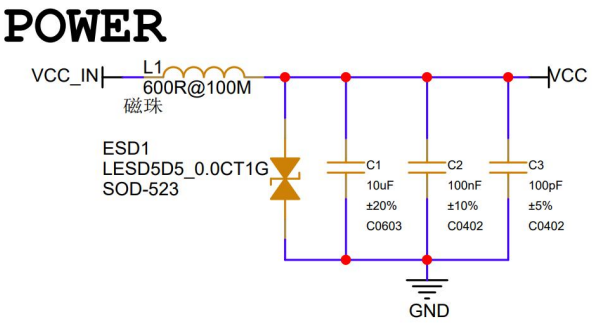

4.1.2 Power supply design considerations:

- The power input is recommended to place the magnetic beads L1 to filter out the high-frequency noise of the power supply.
- The maximum input voltage of module power supply is 3.6V, and the typical value is 3.3V; VCC recommended cable width is above 0.5mm;
- It is recommended to add ESD tube at the module power supply, ESD clamp working voltage V RWM = 5 V, need to be placed near the power supply input interface, to ensure that the power surge voltage is clamped before entering the rear end circuit, and protect the rear end devices and module;
- C1 can choose 10 uF aluminum electrolytic capacitor or ceramic capacitor, which can improve the instantaneous high current continuous capacity of the power supply, the capacitor voltage value should be more than 1.5 times of the input power supply voltage;
- Place bypass capacitors C2 and C3 with low ESR near the module to filter out high frequency interference in the power supply;

4.2 control interface

Table 3. Control Interface

Name	Pin	Description	remark
PB14	3	GPIO (BOOT pin)	A high level is required when burning the program
NRST	24	Reset the input pin	Low level is effective

4.2.1 PB14

The BOOT pin of the PB14 chip is required to provide a high level.

4.2.2 NRST

The reduction was achieved via the NRST pins. In the normal working state of the module, the module reset can be triggered when the NRST pin input is low level. There is a pull up inside the pin, and the typical value of high level voltage is 3.3V, which is suspended when not in use. If the key reset is required, please refer to Figure 4. It is suggested to parallel the 100 nF capacitor at the key, and filter the level jitter after the key is triggered.

Note that due to the internal band pull of the module, low power applications should pay attention to whether the power consumption of this pin meets the requirements.

wireless-tag

Figure 4. Key reset and reference design

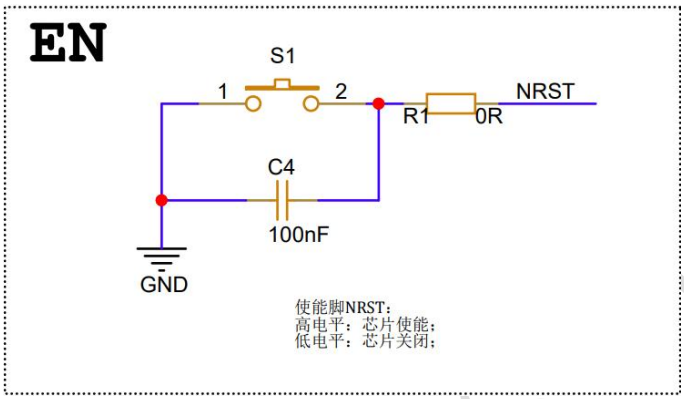

4.3 Peripheral interface

The module provides a variety of common peripheral interfaces

4.3.1 Serial port interface

Table 4 Serial port interface

Name	Pin	Description	Remark
TXD	16	Serial port to send	
RXD	18	Serial mouth reception	

The module can realize the functions of program download, data communication and debugging through the serial interface. Customers can choose to use it according to their needs. The recommended serial port connection circuit is shown in Figure 5. It is recommended to reserve the pull resistance (R6, R7) to prevent the lack of chip serial port communication drive capability. It is recommended to connect 100 ohm OH resistance in series with RXD and TXD signal lines to prevent pulse current and burn out the chip.

Figure 5 Reference design of serial port connection

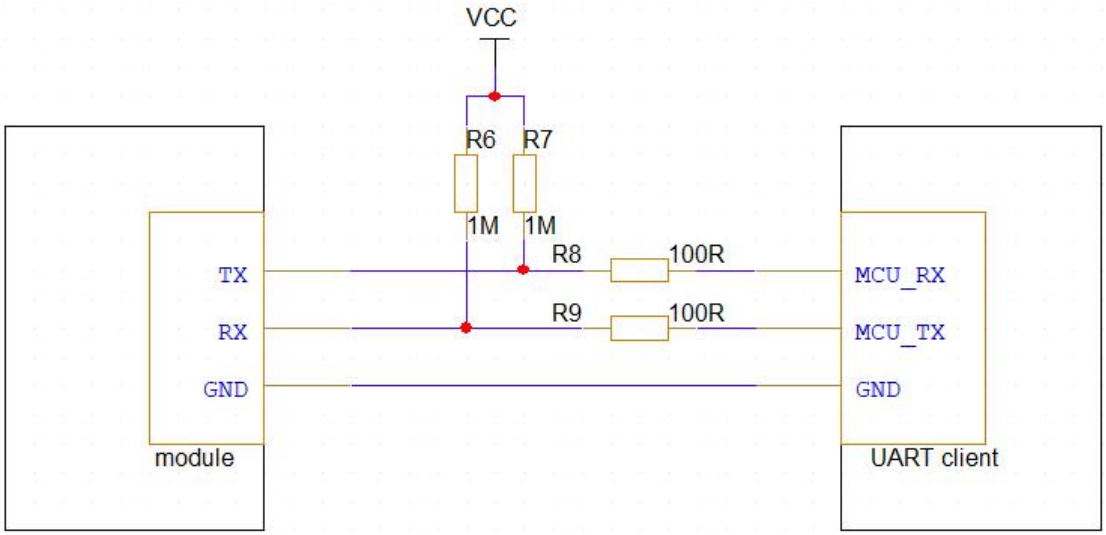

4.3.2 Serial port schematic diagram design considerations:

- Note the correspondence of the signal flow to the connections.
- The module serial port level is 3.3V. If the UART and MCU logic level do not match, the level conversion is required

4.4 RF design considerations:

The module has a PCB antenna, which is above the module outside the shield. The module antenna area should be close to the product edge.

The onboard antenna will be affected by the customer floor. If the communication distance requirement is very high, the customer needs to prepare the finished product of the finalized belt module and submit it to our company for test and verification. The reference layout is shown below:

Figure 6. RF Reference Layout 1

wireless-tag

WT5110-S2
不能小于6mm
金属/电池
铺铜层
净空区
PCB区

Figure 7. RF Reference Layout 2

注：阴影区不能有任何走线和铺铜，以及金属器件

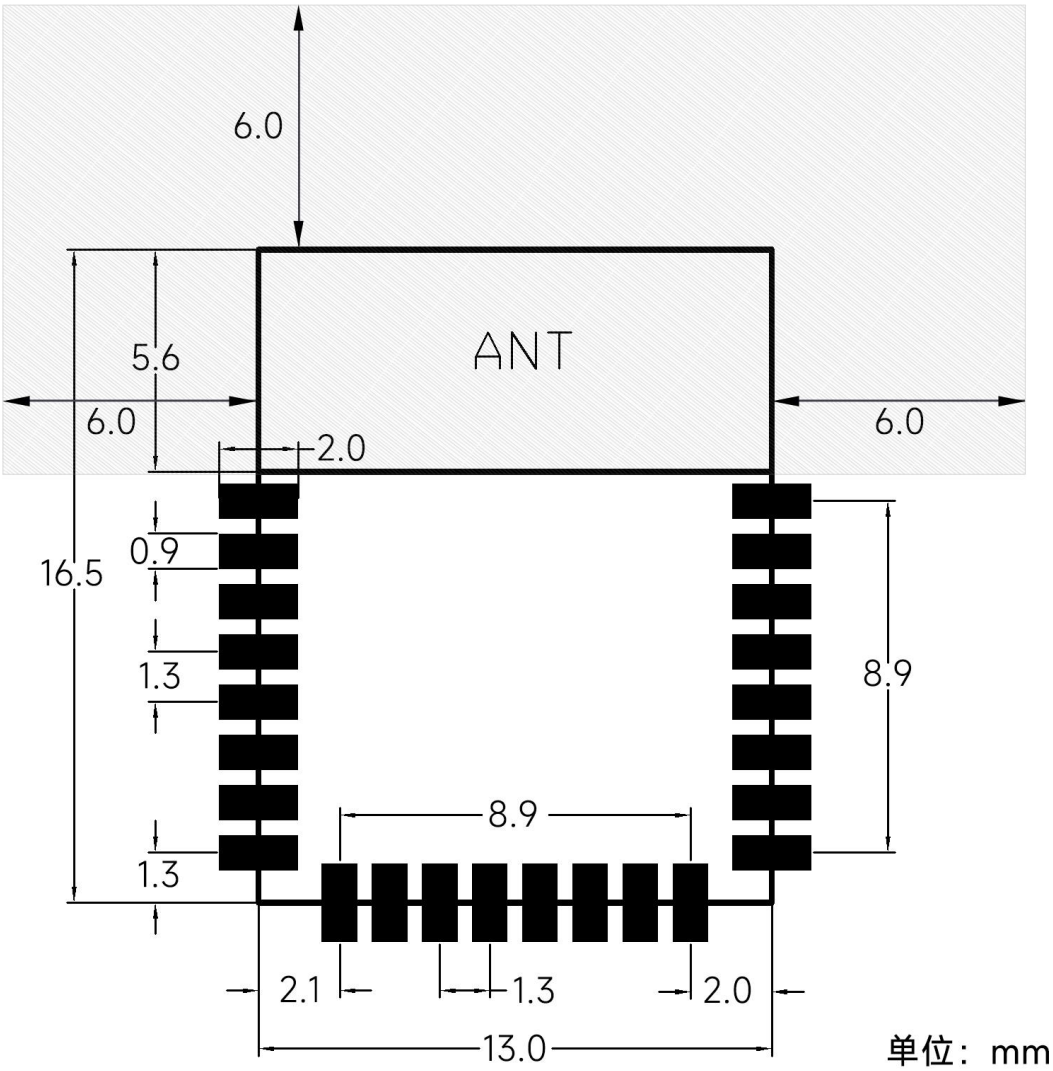

4.5 Mode peripheral reference design

Figure 8. Schematic diagram of the application module peripheral design

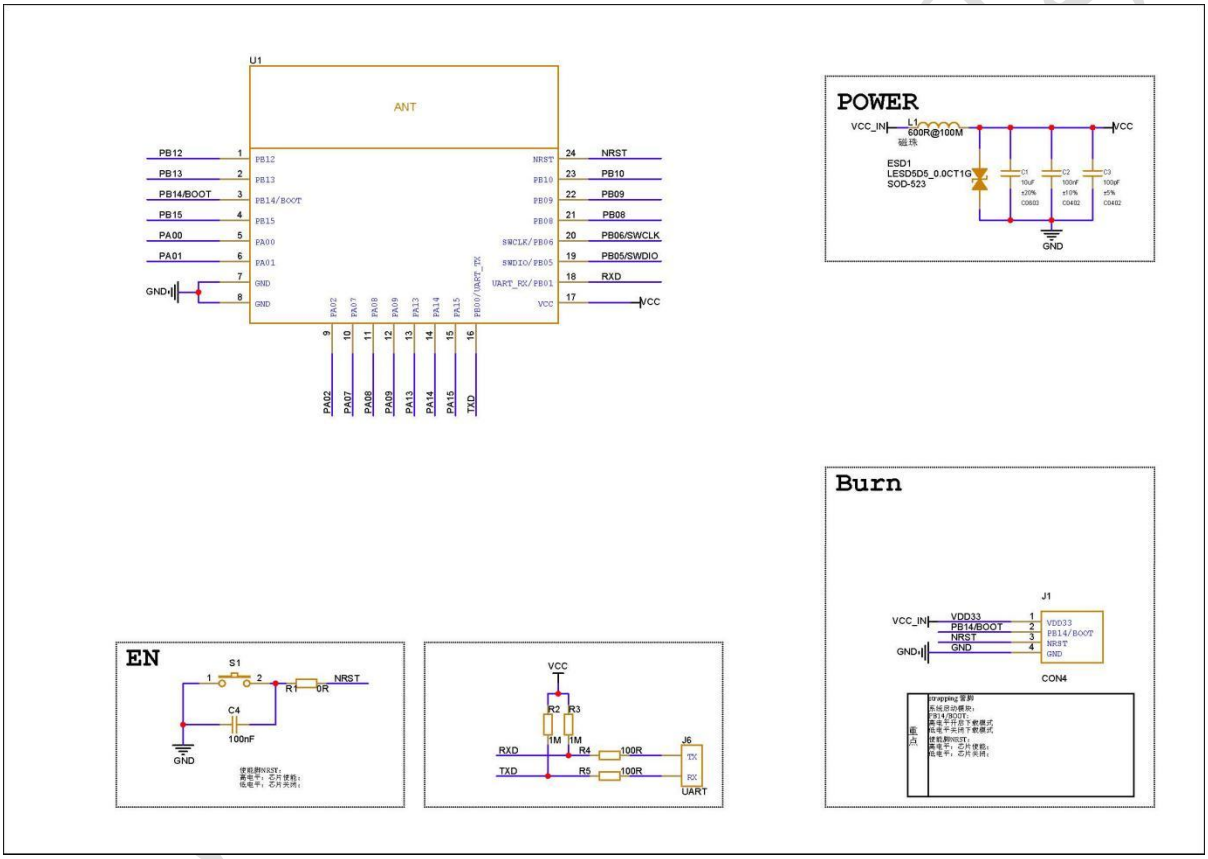

5 electrical character

Table 5. Electrical characteristics

parameter	description	least value	representative value	crest value	unit
working temperature	/	-40		80	℃
supply voltage	/	2.6	3.3	3.6	V
working current	Broadcast Mode @ 0 dBm Output (DCDC ON)		6.7 (mean value)	21.09	mA
	Connection mode (DCDC ON)		4.5 (mean value)	19.9	mA
VIH	Input the high-level voltage range	0.8*VDD33		VDD33	V
V IL	Input the low-level voltage	0		0.2*VD	V

	range			D33	
VOH	Output the high-level voltage range	VDD33-0.4		VDD33	V
VOL	Output the low-level voltage range			0.4	V
VESD	Electrostatic discharge voltage		±4000		V

6 Note for patch

6.1 steel mesh

In the production of steel net, it is recommended to make 0.12~0.15mm thickness step steel net, users can fine-tune according to the actual patch effect.

6.2 solder paste

The thickness of tin paste and the flatness of PCB play a key role in the production qualified rate; In principle, it is not recommended that customers use lead tin paste different from our module process for the following reasons:

The melting point of lead tin paste is 35℃ lower than that of no lead, and the temperature in the reflux process parameters is also lower than that of no lead, so the time is correspondingly less, which is easy to lead to LCC in the module in the semi-melting state, resulting in false welding;

If the customer recommends the lead process, please ensure that the reflux temperature is 220℃ above 45S and the peak is 240℃;
If there are environmental protection requirements, please fine-tune the temperature curve according to the actual situation;

6.3 Sticker furnace temperature curve

If the user PCB is thin or slender, there is a potential risk of warping during SMT. It is recommended to use vehicles during SMT and reflux welding to prevent poor welding caused by PCB warping.

wireless–tag

Figure 9. Furnace temperature curve

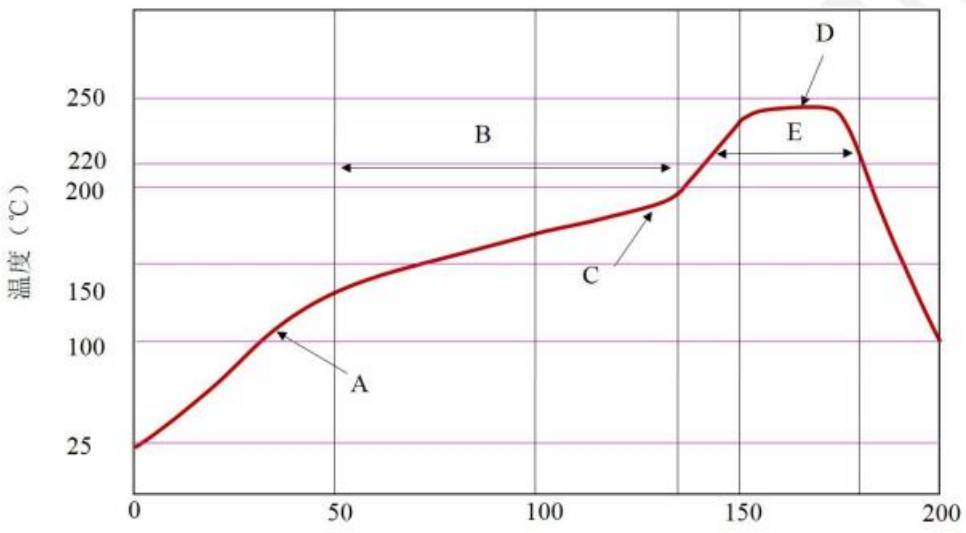

The process parameters are required as follows:

- Rising slope: 1~4℃ / sec; falling slope: -3~ -1℃ / sec;
- Constant temperature zone: 150-180℃ Time: 60-100S;
- Return area: greater than 220℃ time: 40-90S;
- Peak temperature:235-250℃;

7 function declaration

7.1 work pattern

In two main and three main working mode, Bluetooth can simultaneously establish concurrent data connection with 2 main machine (collector, platform automatic cable, handheld device) host and 3 main slave machine (external load switch, alarm device, various external sensors). The typical network topology is as follows:

Figure 10 Topology diagram of the Bluetooth network

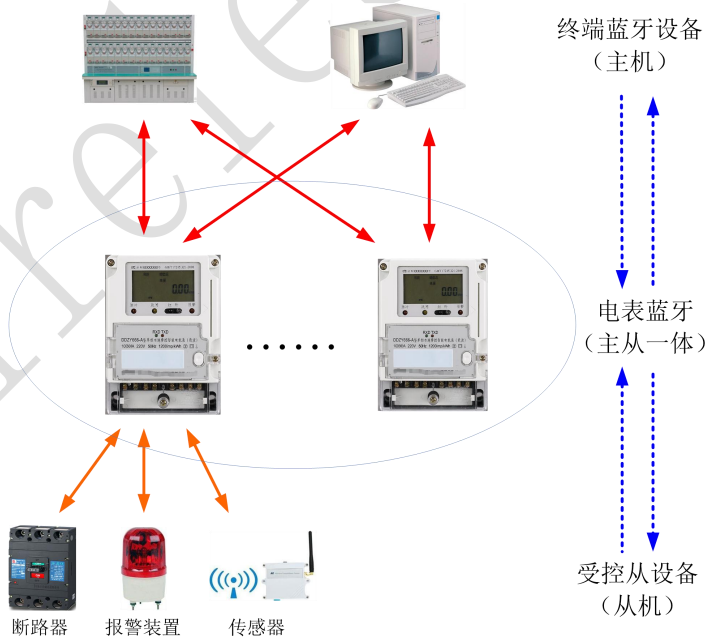

7.2 Supported BLE standards

1) The chip and software protocol stack obtains the QDII of the SIG organization

7.3 Connectivity requirements

1) Communication service UUID:
L SB:{0x79, 0x41, 0xDC, 0x24, 0x0E, 0xE5, 0xA9, 0xE0, 0x93, 0xF3, 0xA3, 0xB5, 0x01, 0x00, 0x40, 0x6E}

2) Data receiving UUID
L SB:{0x79, 0x41, 0xDC, 0x24, 0x0E, 0xE5, 0xA9, 0xE0, 0x93, 0xF3, 0xA3, 0xB5, 0x02, 0x00, 0x40,

0x6E}
Properties: the writewithoutresponse
Descriptor: No
Access ： open

3) Data sending to UUID
L SB:{0x79, 0x41, 0xDC, 0x24, 0x0E, 0xE5, 0xA9, 0xE0, 0x93, 0xF3, 0xA3, 0xB5, 0x03, 0x00, 0x40, 0x6E}
attribute:notification
Descriptor: C CCD (this UUID is 0x 2902)
Access ： open

7.4 MAC address format

1） Using the standard 48bit format, the highest two bit bits are "11";

2） The remaining 46bit bit cannot be all 0, nor all 1;

3） 41-46bit bit is device type description bit, which is used to distinguish equipment types such as collector, handheld device, electricity meter, etc., to avoid conflicts, as follows:

device type	characteristic
electric energy meter	0
Acquisition equipment: collector, concentrator, etc	1
Operation and maintenance of handheld equipment	2
Testing equipment: table body, automatic detection line	3
load switch	4

4） 1-40 bit bit is the address content, which corresponds to the electric hour meter communication address one by one, using Hex coding mode, if the electric hour meter communication address is 123456789999, then Bluetooth part MAC 1-40bit is 1CBE991DEF;

5） The Bluetooth MAC address of the electricity meter is read-only, which is not allowed to be set. After the electricity meter communication address changes, the electricity meter Bluetooth MAC address changes at the same time.

wireless–tag

7.5 Broadcast of the Payload convention

Payload #	content	Example (31 bytes)
Broadcast data logo Advertising data flag	Length-Type-Value	0x02 0x01 0x06
Radio emission power Advertising TX Power	Length-Type-Value	0x02 0x0A 0x00
From the machine connection interval Slave Connection Interval Range	Length-Type	0x05 0x12
	Min Connection Interval	0x00 0x18 i. e., 1.25ms * 24=30ms
	Max Connection Interval	0x00 0x50 i. e., 1.25ms * 80=100ms
Broadcast specified data ManufactorySpecify Data	Length-Type	0x09 0xFF
	Company ID(2bytes)	0xFFFF, here represents the manufacturer in the state grid ID number, such as Weisheng is 0020
	MAC Address(6bytes)	0xE7D4370AFC02, here is the MAC address for compatibility with the Apple IOS APP
Broadcasting equipment referred to as Advertising Device Name	Length-Type	0x07 0x09
	Device Name(6Byte ASCII Char)	The last six digits of the communication address in ASCII

Note: The Bluetooth broadcast transmission is in the small end mode, such as the connection interval transmission message order is: 0x05 0x12 0x18 0x00 0x50
0x00 where 0x18 0x00 represents MinConnection Interval, 1.25ms * 24=30ms; 0x50 0x00 represents MaxConnection Interval, 1.25ms * 80=100ms.

Broadcast the scan response data

Payload #	content	give an example
serve UUID Service UUID	Length-Type	0x11 0x07
UUID(LSB)	6E4000001-B5A3-F393-E0A9-E50E24DC4179 (here, for example, see UUID agreement for details)	0x7941DC240EE5A9E093F3A3B50100406E (for an example, see the UUID agreement) to be compatible with the Apple IOS APP

wireless-tag

7.6 Bluetooth establishes the communication process convention process

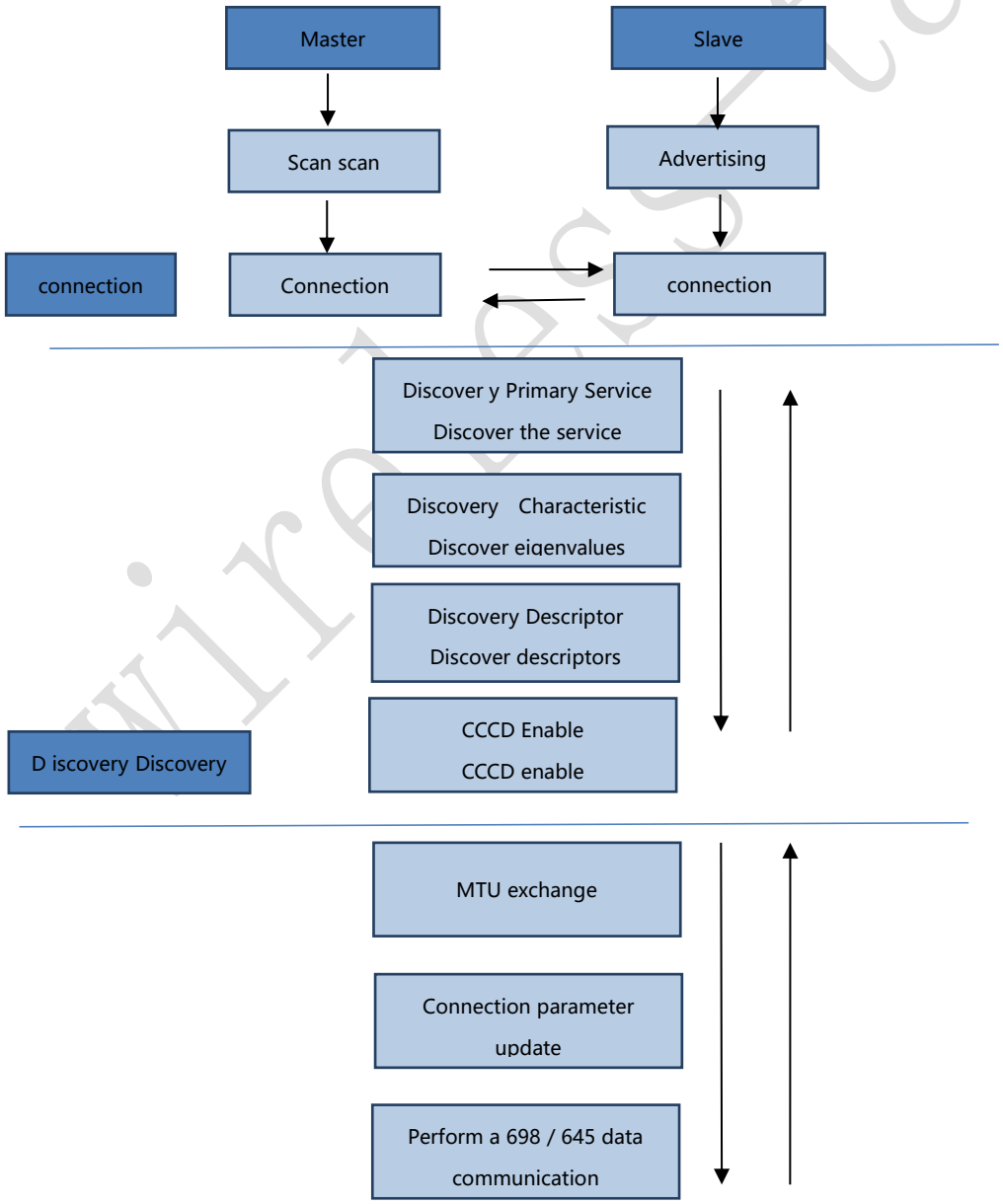

Bluetooth establishment of the communication process convention flow diagram

7.7 Bluetooth power-up initialization process

A) After the Bluetooth module is powered, judge the legitimacy of the MAC address. If the

address is legal (not full FF), the data connection will be established with the corresponding slave. If illegal (full FF, factory default), no connection will be established. When the slave MAC parameters change, the electricity meter shall reconnect.

B) The electricity meter turns on the Bluetooth broadcast and waits to be connected by the Bluetooth host. When the host is connected, the communication has a timeout or no communication within 6 seconds, and the electricity meter should be actively disconnected.

7.8 The Bluetooth broadcast content of the circuit breaker

Bluetooth broadcast content for circuit breakers with automatic pairing function:

Payload #	content	Example (26 bytes)
Broadcast data logo	Length-type-value	0x02 0x01 0x06
The manufacturer specifies the data	Length-Type	0x16 0xFF
	Breaker device category code (1 byte)	0 xC 4 (fixed value)
	Vendor Code (2 bytes)	Here represents the manufacturer in the state grid ID number, the default 0xFFFF
	Circuit breaker automatic matching check code (2 bytes)	0 xE 212 (algorithm generated)
	Connect the PIN code ciphertext (16 bytes)	0xACA748039B980D1DDA0A6A4AFD1B1B55

Note 1. The feature code is in small end mode, and the feature code 0 xe 212 is in 0x12 0xe2 in the broadcast package.

Note 2. If the PIN code is full FF, it means that the paired PIN is not enabled, that is, the link layer encryption is not enabled, and it is compatible with some Bluetooth slave machines with low security requirements. When the meter is connected to the slave, it is connected according to the MAC address, and if the slave security PIN is not enabled.

wireless-tag

Federal Communication Commission Statement (FCC, U.S.)

This equipment has been tested and found to comply with the limits for a Class B digital device, pursuant to Part 15 of the FCC Rules. These limits are designed to provide reasonable protection against harmful interference in a residential installation. This equipment generates, uses and can radiate radio frequency energy and, if not installed and used in accordance with the instructions, may cause harmful interference to radio communications. However, there is no guarantee that interference will not occur in a particular installation. If this equipment does cause harmful interference to radio or television reception, which can be determined by turning the equipment off and on, the user is encouraged to try to correct the interference by one of the following measures:

- Reorient or relocate the receiving antenna.
- Increase the separation between the equipment and receiver.
- Connect the equipment into an outlet on a circuit different from that to which the receiver is connected.
- Consult the dealer or an experienced radio/TV technician for help.

This device complies with Part 15 of the FCC Rules. Operation is subject to the following two conditions:

(1) This device may not cause harmful interference, and (2) this device must accept any interference received, including interference that may cause undesired operation.

FCC Caution:

Any changes or modifications not expressly approved by the party responsible for compliance could void the user's authority to operate this equipment.

FCC Radiation Exposure Statement:

This equipment complies with FCC radiation exposure limits set forth for an uncontrolled environment. This equipment should be installed and operated with minimum distance 20cm between the radiator & your body.

IMPORTANT NOTES

Co-location warning:

This transmitter must not be co-located or operating in conjunction with any other antenna or transmitter.

OEM integration instructions:

This device is intended only for OEM integrators under the following conditions:

The transmitter module may not be co-located with any other transmitter or antenna. The module shall be only used with the external antenna(s) that has been originally tested and certified with this module.

As long as the conditions above are met, further transmitter test will not be required. However, the OEM integrator is still responsible for testing their end-product for any additional compliance requirements required with this module installed (for example, digital device emissions, PC peripheral requirements, etc.).

Validity of using the module certification:

In the event that these conditions cannot be met (for example certain laptop configurations or co-location with another transmitter), then the FCC authorization for this module in combination with the host equipment is no longer considered valid and the FCC ID of the module cannot be used on the final product. In these circumstances, the OEM integrator will be responsible for re-evaluating the end product (including the transmitter) and obtaining a separate FCC authorization.

End product labeling:

The final end product must be labeled in a visible area with the following: “Contains Transmitter Module FCC ID: 2AFOS-WT5110-S2”.

Information that must be placed in the end user manual:

The OEM integrator has to be aware not to provide information to the end user regarding how to install or remove this RF module in the user's manual of the end product which integrates this module. The end user manual shall include all required regulatory information/warning as show

in this manual.

Integration instructions for host product manufactures according to KDB 996369 D03 OEM Manual v01

2.2 List of applicable FCC rules

FCC Part 15 Subpart C 15.247 & 15.207 & 15.209

2.3 Specific operational use conditions

The module is a BLE Module with BLE 2.4G function.

BLE Specification:

Operation Frequency: 2402~2480MHz

Number of Channel: 40

Modulation: GFSK

Type: PCB Antenna

Gain: 0.42dBi

The module can be used for mobile or applications with a maximum 0.42dBi antenna. The host manufacturer installing this module into their product must ensure that the final composit product complies with the FCC requirements by a technical assessment or evaluation to the FCC rules, including the transmitter operaition. The host manufacturer has to be aware not to provide information to the end user regarding how to install or remove this RF module in the user's manual of the end product which

integrates this module. The end user manual shall include all required regulatory information/warning as show in this manual.

2.4 Limited module procedures

Not applicable.

wireless–tag

2.5 Trace antenna designs

Not applicable. The module has its own antenna, and doesn't need a host's printed board microstrip trace antenna etc.

2.6 RF exposure considerations

The module must be installed in the host equipment such that at least 20cm is maintained between the antenna and users' body; and if RF exposure statement or module layout is changed, then the host product manufacturer required to take responsibility of the module through a change in FCC ID or new application. The FCC ID of the module cannot be used on the final product. In these circumstances, the host manufacturer will be responsible for re-evaluating the end product (including the transmitter) and obtaining a separate FCC authorization

2.7 Antennas

Antenna Specification are as follows:

Type: PCB Antenna

Gain: 0.42dBi

This device is intended only for host manufacturers under the following conditions: The transmitter module may not be co-located with any other transmitter or antenna; The module shall be only used with the internal antenna(s) that has been originally tested and certified with this module. The antenna must be either permanently attached or employ a 'unique' antenna coupler.

As long as the conditions above are met, further transmitter test will not be required. However, the host manufacturer is still responsible for testing their end-product for any additional compliance requirements required with this module installed (for example, digital device emissions, PC peripheral requirements, etc.)

2.8 Label and compliance information

Host product manufacturers need to provide a physical or e-label stating "Contains Transmitter Module FCC ID: 2AFOS-WT5110-S2" with their finished product.

2.9 Information on test modes and additional testing requirements

BLE

Operation Frequency: 2402~2480MHz

Number of Channel: 40

Modulation: GFSK

Host manufacturer must perfom test of radiated & conducted emission and spurious emission, etc according to the actual test modes for a stand-alone modular transmitter in a host, as well as for multiple simultaneously transmitting modules or other transmitters in a host product. Only when all the test results of test modes comply with FCC requirements, then the end product can be sold legally.

2.10 Additional testing, Part 15 Subpart B disclaimer

The modular transmitter is only FCC authorized for FCC Part 15 Subpart C 15.247 & 15.207 & 15.209 and that the host product manufacturer is responsible for compliance to any other FCC rules that apply to the host not covered by the modular transmitter grant of certification. If the grantee markets their product as being Part 15 Subpart B compliant (when it also contains unintentional radiator digital circuity), then the grantee shall provide a notice stating that the final host product still requires Part 15 Subpart B compliance testing with the modular transmitter installed.

wireless–tag