1ST MATE KIT - MERCURY

IMPORTANT: This document guides our dealers, boatbuilders, and company service personnel in the proper installation or service of our products. If you have not been trained in the recommended servicing or installation procedures for these or similar Mercury Marine products, have the work performed by an authorized Mercury Marine dealer technician. Improper installation or servicing of the Mercury product could result in damage to the product or personal injury to those installing or operating the product. Always refer to the appropriate Mercury Marine service manual for component removal and installation instructions.

NOTE: After completing installation, place these instructions with the product for the owner's future use.

Components Contained in Kit

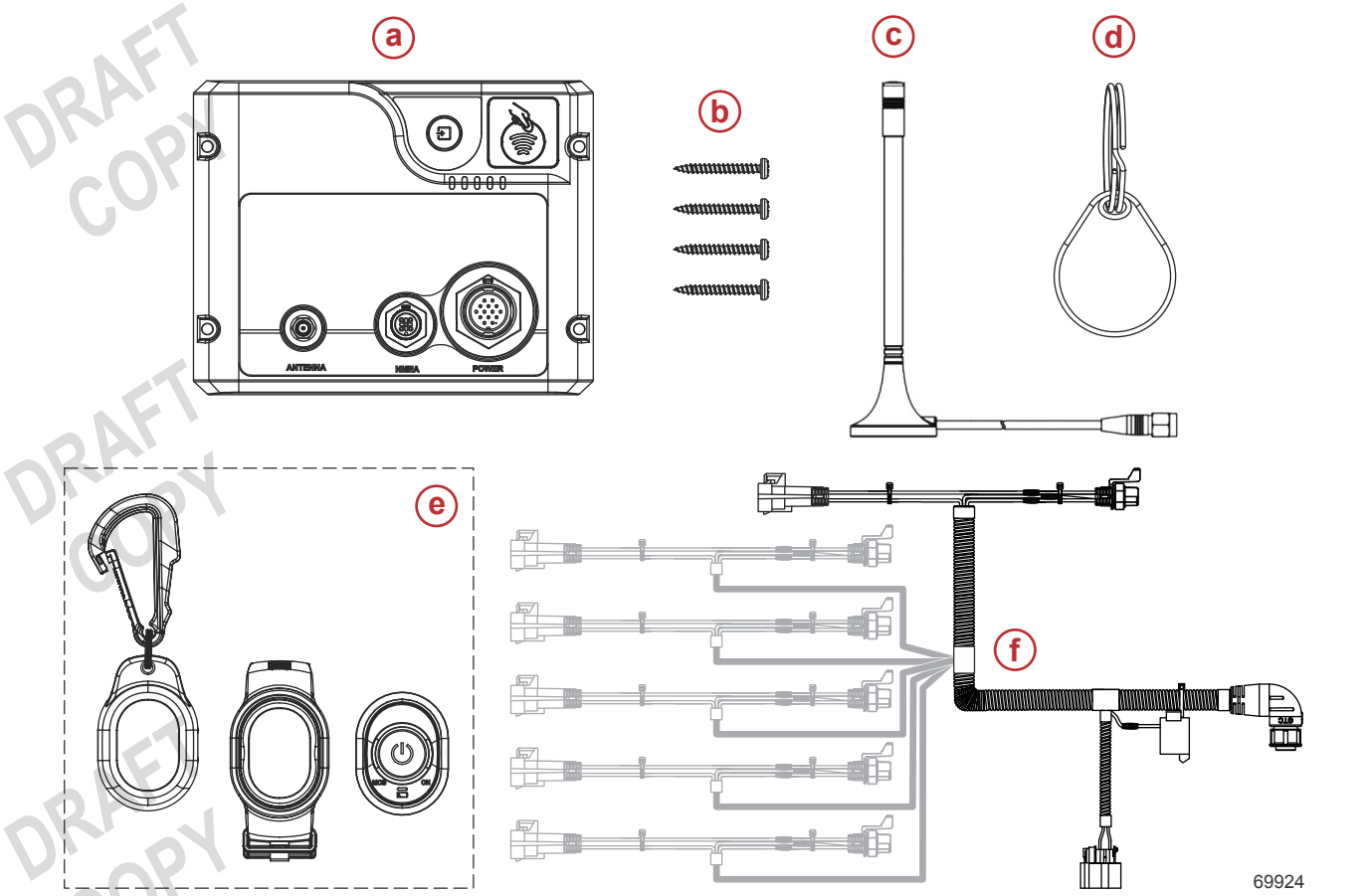

DRAFT COPY

Ref.	Qty.	Description	
a	1	1st Mate hub	
b	4	Screw	
c	1	Hub antenna	
d	1	NFC chip	
e	1	1st Mate driver fob kit	
f	1	1st Mate harness	Single (1 key switch drop)
			Dual (2 key switch drops)
			Triple (3 key switch drops)
			4/5/6 engine (6 key switch drops)

© 2019 Mercury Marine

Hub Installation

⚠ WARNING

Before working around electrical system components, disconnect the battery cables from the battery to prevent injury or damage to the electrical system due to an accidental short circuit.

1. Place the hub so that the antenna is at least 50.8 mm (2.00 in.) from other electronic or magnetic equipment including Chartplotters, VHF radios, GPS receivers, and antennas.
2. Use the following dimensions to select the desired location for the hub. Mount the hub on a bulkhead or panel near the helm where it will be protected from the elements.

   IMPORTANT: Minimum panel depth must be greater than 20 mm (0.79 in.). Use a 1/8 bit to drill pilot holes for the fasteners. Do not drill through the panel. Drawing measurements are for reference only. Do not use for a drilling template.

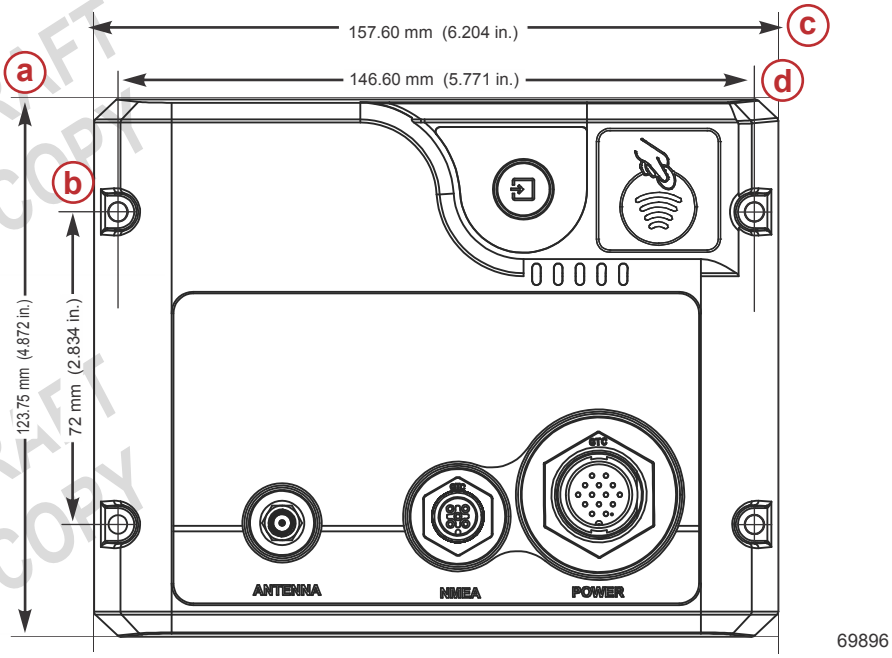

Not a template
- a - 123.75 mm (4.872 in.)
- b - 72 mm (2.834 in.)
- c - 157.60 mm (6.204 in.)
- d - 146.60 mm (5.771 in.)

IMPORTANT: Use the supplied fasteners to mount the hub on a panel or bulkhead with the front of the hub facing forward or aft, so that it is perpendicular to the vessel's center line. Do not over tighten the mounting fasteners.

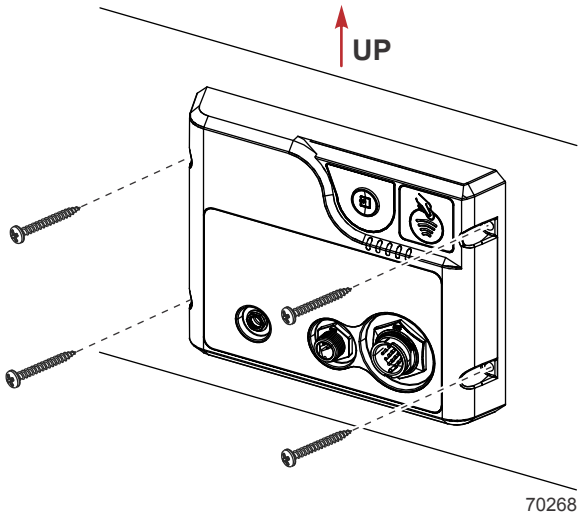

Recommended mounting orientation

3. Connect the NMEA 2000 network connector to the hub.
4. Connect the 14-pin harness connector to the hub.

DRAFT COPY

 © 2019 Mercury Marine

5. Connect each trunk of the 14-pin hub harness to the corresponding main station extension harness connector and its respective key switch harness connector (as equipped), i.e. single, dual, triple, quad, five, or six engine applications. The starboard key switch harness drop (labeled STBD) must be connected to the starboard engine key switch. Refer to **Diagrams**.

Antenna Installation

1. Mount the antenna in an unobstructed location at least 30 cm (10 in.) away from other electronic equipment.
2. Connect the antenna harness to the hub.

Diagrams

Single Engine Applications

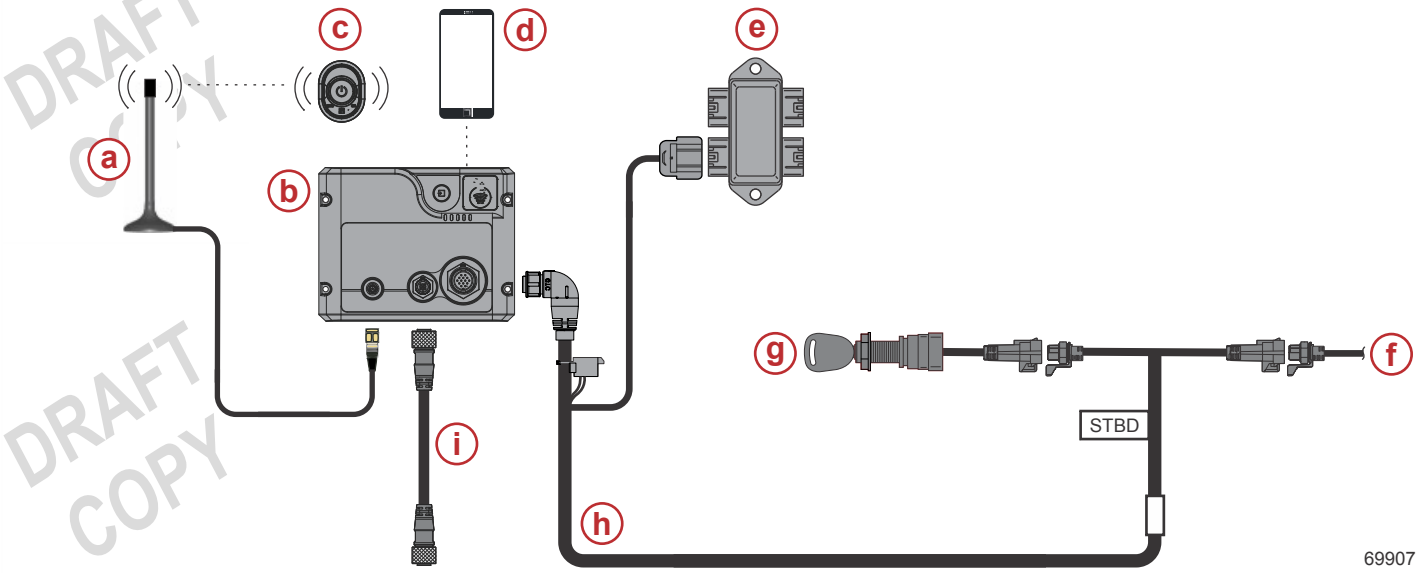

a - Antenna
b - HUB
c - Driver fob
d - Mobile device
e - Junction box
f - Key switch harness
g - Starboard engine key switch
h - Hub harness
i - NMEA 2000

DRAFT COPY

 © 2019 Mercury Marine

Dual Engine Applications

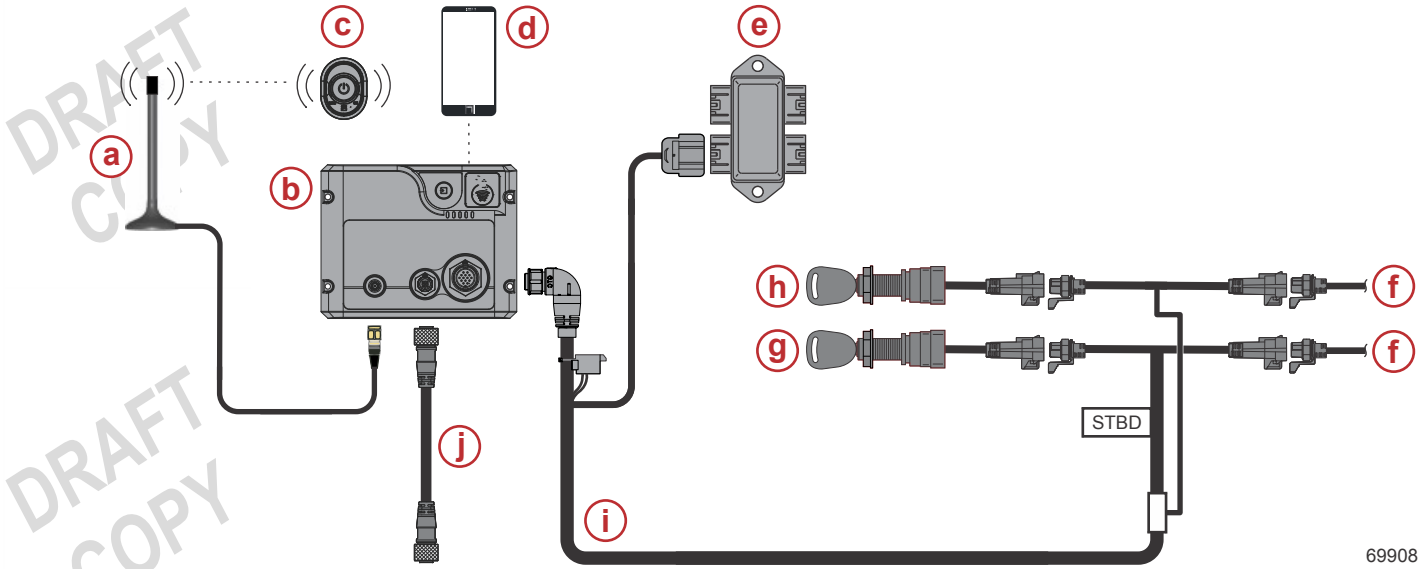

a - Antenna
b - HUB
c - Driver fob
d - Mobile device
e - Junction box
f - Key switch harness
g - Starboard engine key switch
h - Key switch
i - Hub harness
j - NMEA 2000

DRAFT COPY

 © 2019 Mercury Marine

Triple Engine Applications

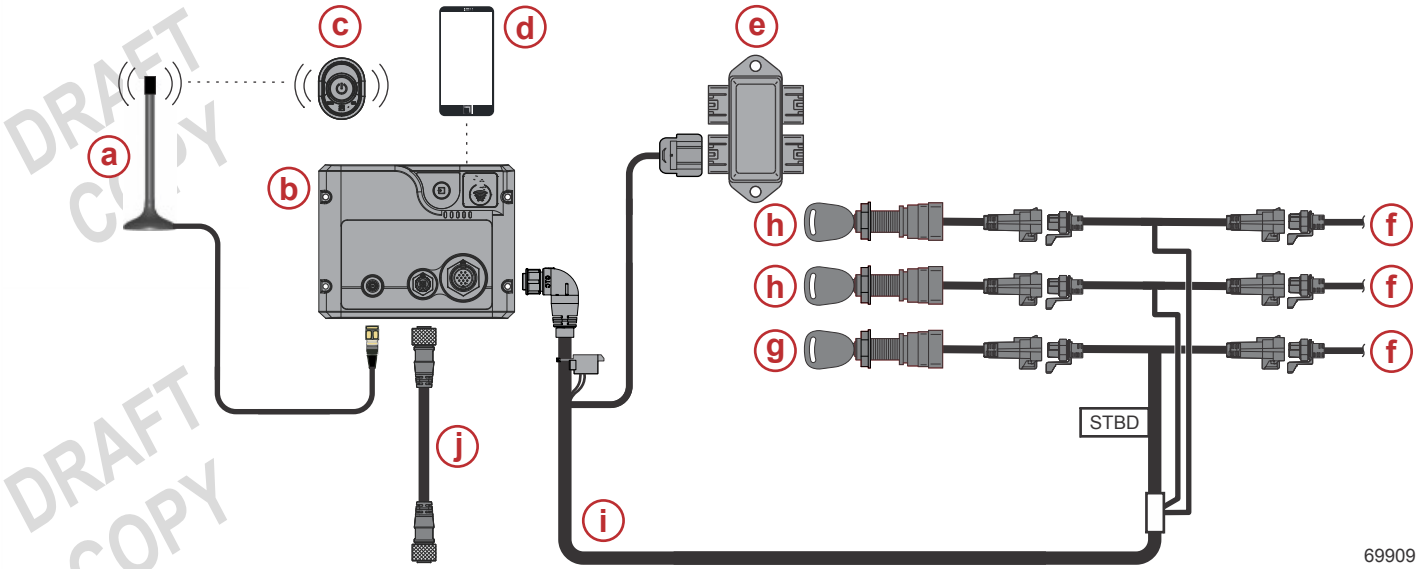

a - Antenna
b - HUB
c - Driver fob
d - Mobile device
e - Junction box
f - Key switch harness
g - Starboard engine key switch
h - Key switch
i - Hub harness
j - NMEA 2000

DRAFT COPY

© 2019 Mercury Marine

Four, Five, and Six Engine Applications

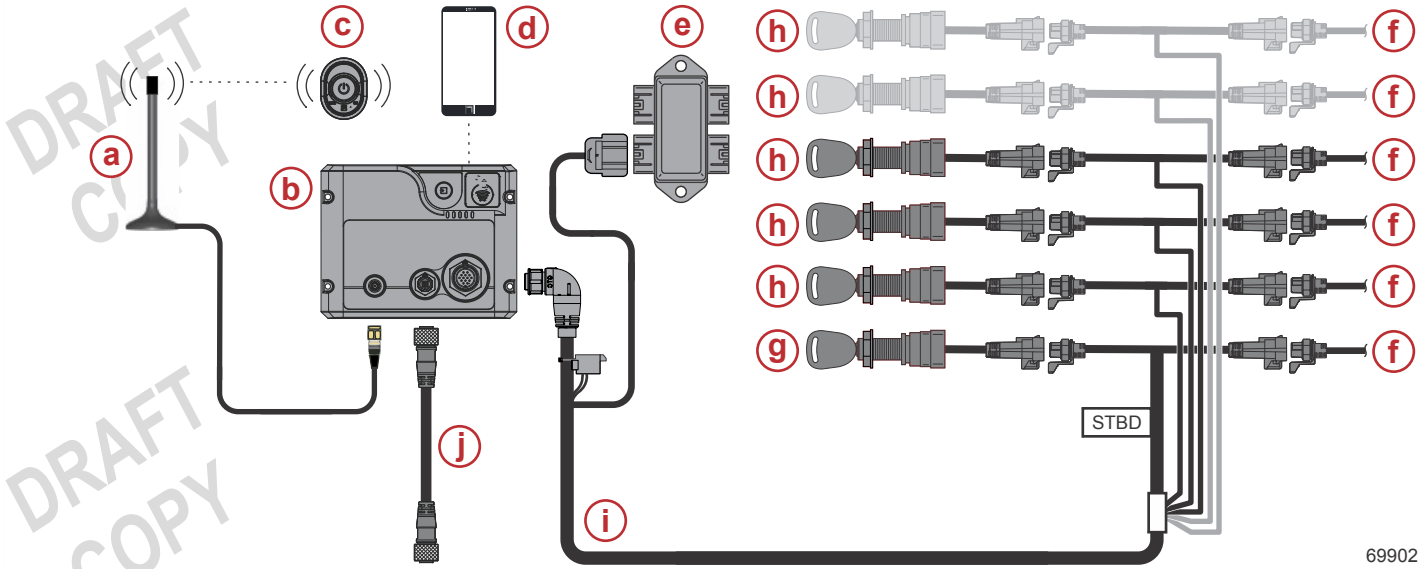

a - Antenna
b - HUB
c - Driver fob
d - Mobile device
e - Junction box
f - Key switch harness
g - Starboard engine key switch
h - Key switch
i - Hub harness
j - NMEA 2000

FOB Initial Pairing

a - LEDs
1. Theft deterrent system (TDS) active
2. Man overboard (MOB) active
3. NMEA network connected
4. SmartCraft network connected
5. Pairing indicator

b - Button

© 2019 Mercury Marine

LED Indicators

LED	Green	Red	Blue
TDS			
MOB			
NMEA			
SmartCraft			
Bluetooth			

System Configuration

Download the app from Google Play or the Apple App Store after point of sale transaction or during the vessel delivery and sea trial.

Technical Specifications

Hub

General		Hub
Operating temperature range		-10 °C–70 °C (14 F°–158 F°)
Storage temperature range		-40 °C–85 °C (-40 F°–185 F°)
Operating humidity range		0–100%
Voltage source		13.8 V Nominal
Power consumption		10 mA in sleep (0.138 mW) 150 mA in active mode (2 W)
Frequencies	WiMEA	915 MHz FCC (US/CAN)
		868 MHz RED (EU)
		915 MHz ACMA (AU)
	Bluetooth	2.4 GHz
	NFC	13.56 MHz
RF Signal	WiMEA	10dBm max.
	Bluetooth	5dBm max.
	WiFi	20dBm max.
	NFC	100mW max.
Wireless peripherals		WiMEA, Bluetooth, WiFi, NFC
Hardware peripherals		NMEA2000
		SmartCraft

Antenna

Item		Specifications
Antenna	Frequency Range	824~960 MHz
	Polarization	Linear
	Gain	2.0dBi (Zentih)
	V.S.W.R.	< 2.0
	Impedance	50Ω
Mechanical	Cable	RG174
	Cable Length	2 Meters
	Connector	RP-SMA
	Mounting method	Magnet / 3M-tape
Environmental	Operating Temperature	-40 °C–85 °C (-40 F°–185 F°)
	Vibration	10—55 Hz with 1.5 mm amplitude 2 hours
	Environmentally Friendly	ROHS Compliant

DRAFT COPY

 © 2019 Mercury Marine

Certifications and Compliance	Hub
Radio - hub	US: FCC Part 15c EU: R&TTE, EN 300 328, Maritime/CE
EMC - hub	US: CISPR 16-1 EU: EN 301 489-01 (V1.9.2), Class A
Flammability - fob	IEC 60950 1&22, CE-UL94
Imersion - fob	IEC 60945 IP68, Maritime/CE - 3m / 10ft. water resistant
Compliant materials	RoHS (2002/95/EC)
Compliant	ABYC A-33

ABYC A33 & E–11 Compliant. US Compliant (US Emergency engine/propulsion cut-off devices standard)

For Products Sold in the US/CAN

Changes or modifications to the equipment not expressly approved by the party responsible for compliance could void the user's authority to operate the equipment.

This device complies with Part 15 of the FCC Rules. Operation is subject to the following two conditions: (1) this device may not cause harmful interference, and (2) this device must accept any interference received, including interference that may cause undesired operation.

Note: This equipment has been tested and found to comply with the limits for a Class B digital device, pursuant to part 15 of the FCC Rules. These limits are designed to provide reasonable protection against harmful interference in a residential installation. This equipment generates, uses and can radiate radio frequency energy and, if not installed and used in accordance with the instructions, may cause harmful interference to radio communications. However, there is no guarantee that interference will not occur in a particular installation. If this equipment does cause harmful interference to radio or television reception, which can be determined by turning the equipment off and on, the user is encouraged to try to correct the interference by one or more of the following measures:

- Reorient or relocate the receiving antenna.
- Increase the separation between the equipment and receiver.
- Connect the equipment into an outlet on a circuit different from that to which the receiver is connected.
- Consult the dealer or an experienced radio/TV technician for help.

1st Mate Hub: This device complies with FCC RF radiation exposure limits set forth for an uncontrolled environment. The antenna used for this transmitter must be installed to provide a separation distance of at least 20 cm from all persons and must not be co-located or operating in conjunction with any other antenna or transmitter.

1st Mate Fob: This device has been tested and meets applicable limits for radio frequency (RF) exposure.

Déclaration d'exposition aux radiations: Déclaration d'exposition aux radiations: Cet équipement est conforme aux limites d'exposition aux rayonnements IC établies pour un environnement non contrôlé. Cet équipement doit être installé et utilisé avec un minimum de 20 cm de distance entre la source de rayonnement et votre corps.

Radiation Exposure Statement: This equipment complies with IC radiation exposure limits set forth for an uncontrolled environment. This equipment should be installed and operated with minimum distance 20 cm between the radiator & your body.

This device complies with Industry Canada licence-exempt RSS standard(s). Operation is subject to the following two conditions:

- this device may not cause interference, and (2) this device must accept any interference, including interference that may cause undesired operation of the device. Le présent appareil est conforme aux CNR d'Industrie Canada applicables aux appareils radio exempts de licence. L'exploitation est autorisée aux deux conditions suivantes : (1) l'appareil ne doit pas produire de brouillage,
- l'utilisateur de l'appareil doit accepter tout brouillage radioélectrique subi, même si le brouillage est susceptible d'en compromettre le fonctionnement.

Products of Mercury Marine
W6250 Pioneer Road
Fond du Lac, WI 54936-1939

© MERCURY MARINE. All rights reserved. Reproduction in whole or in part without permission is prohibited. Alpha, Axius, Bravo One, Bravo Two, Bravo Three, Circle M with Waves Logo, GO BOLDLY, K-planes, Mariner, MerCathode, MerCruiser, Mercury, Mercury with Waves Logo, Mercury Marine, Mercury Precision Parts, Mercury Propellers, Mercury Racing, MotorGuide, OptiMax, Pro XS, Quicksilver, SeaCore, Skyhook, SmartCraft, Sport-Jet, Verado, VesselView, Zero Effort, Zeus, #1 On the Water and We're Driven to Win are registered trademarks of Brunswick Corporation. Mercury Product Protection is a registered service mark of Brunswick Corporation. All other marks are the property of their respective owners.