Waterguard User and Installation Manual

abrahelpcenter.zendesk.com/hc/en-us/articles/4433564776861-Waterguard-User-and-Installation-Manual-

Introduction

Congratulations on your new Waterguard water security system. Your house is now equipped with a reliable system that protects your assets from water damage.

The system consists of the Waterguard Hub, a range of valve sizes from 1/2" to 2" (DN15 to DN50), the wireless Waterguard Water Sensor, installation brackets, and the Abra mobile application.

Abra Hub

The Abra Hub is the combined heart and brain of the Waterguard system. The Hub enables the use of wired Sensor Tapes and the wireless Waterguard Water Sensor.

Waterguard Valves

The Waterguard valve(s) are installed on the tap water supply pipe(s). When water leakage is detected, or the user requests the valve to close, the valve shuts off the water supply to reduce the consequences of water leakage.

Waterguard Water Sensor

The wireless Waterguard Water Sensor detects the presence of water while also measuring the temperature and humidity. When water is detected, the water supply is automatically shut off and a combined visible and audible alarm is triggered on both the sensor and on the Abra Hub.

Abra Mobile App

The Abra mobile application allows the user to set up, monitor, and control the status of up to two Valve Units, up to 50 wireless Water Sensors, and Sensor Tape.

About the system

Waterguard is a wireless, automatic water shut-off system that continuously monitors the tap water system in your home by sensing water or high moisture levels in specific locations. The system can detect water using a physically connected water sensor tape or one or more battery-powered, wireless sensor(s).

Note: All wireless sensors must be paired with the Hub.

The Waterguard automatic water shut-off system is developed for use in single-family home tap water systems with a separate water heater (valve on cold water inlet) and apartments with a direct supply of both cold and warm water (0°C to 60°C).

The Waterguard system does not prevent water leakage but provides effective protection that limits the extent of the leakage. When a water leakage is detected, 1) the water shuts off and 2) the homeowner is notified through an audible alarm, light signals, as well as notifications in the mobile application.

Optionally, the alarm will be distributed to a certified alarm central (available through a subscription) that may assist in reducing the impact of the water leakage.

Detailed information about the water leakage is available in the mobile application, e.g. which wireless sensor(s) detects water and your options to facilitate the appropriate action.

The Waterguard system is capable of controlling up to two valves per Hub for simultaneous control of two water pipelines (e.g. cold and warm water).

Getting started

Install the system

Contact a certified installer and install the system.

Download the Abra mobile application (*optional*)

Download and install the Abra mobile application from App Store (Apple) or Google Play (Android).

Register user account (*optional*)

Setup your user account and register information about your home.

Setup and configure your home

If not already configured by the installer; consult the installation manual and follow the on-screen instructions to set up and configure your system, including paring wireless Water Sensors to the Hub.

Waterguard Products - Overview

Contents of the Waterguard base package for 1/2" and 3/4" valves

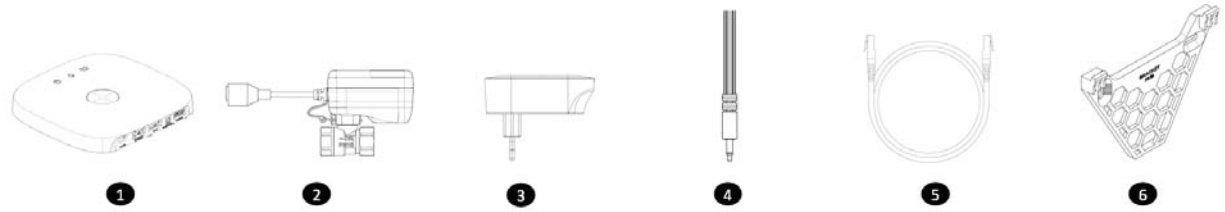

1. ABRA HUB
   The hub controls the Waterguard system and provides a physical control and signal interface to the user.
2. MOTORIZED BALL VALVE
   Waterguard motorized ball valves available in 1/2" (DN15) and 3/4" (DN20) sizes.
3. POWER ADAPTER
   230V AC to 24V DC power supply for Hub
4. SENSOR TAPE
   3 m long sensor tape with 3.5 mm Jack connector for installation to Hub, mounted to the floor in locations that may accumulate water from leakage.
5. VALVE CABLE
   2 m long Cat.6 ethernet cable connecting the motorized ball valve to the Hub
6. HUB MOUNTING BRACKET AND MOUNTING KIT
   Bracket to securely mount the Hub to the wall using 2x screws (included).

All accessories are sold separately and packaged separately.

Contents of the Waterguard base package for 1" to 2" valves

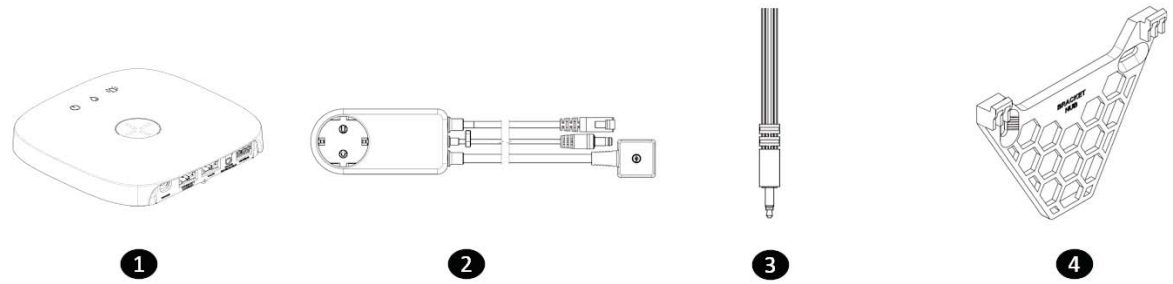

1. ABRA HUB

   The hub controls the Waterguard system and provides a physical control and signal interface to the user.

2. POWER ADAPTER - SOLENOID VALVES
   230 V AC supply for magnetic solenoid valve, 230V AC to 24V DC power supply and valve control interface for Hub
3. SENSOR TAPE
   3 m long sensor tape with 3.5 mm Jack for installation in Hub, glued to the floor in places that may accumulate water from leakage
4. HUB MOUNTING BRACKET AND MOUNTING KIT
   Bracket to securely mount the Hub to the wall using 2x screws (included).

Items bought separately

1. MAGNETIC SOLENOID VALVE
   Waterguard magnetic solenoid valves available in 1" (DN25), 1 1/4" (DN32), 1 1/2" (DN40) and 2" (DN50) sizes.
2. EXTENSION CABLE
   Extension cable to connect up to 3 magnetic solenoid valves in parallel for simultaneous operation.

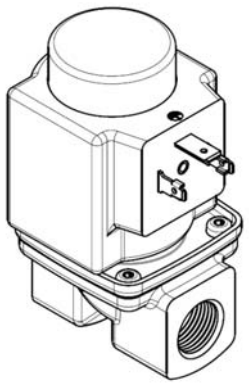

1

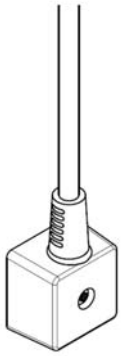

2

Accessories

1

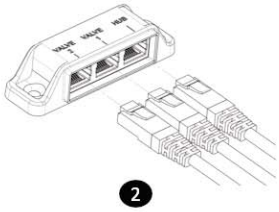

2

3

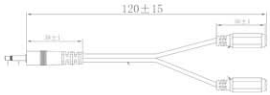

4

1. WIRELESS WATER SENSOR
   Battery-powered, wireless water sensor with > 5 years battery change intervals and min. 20 m range (up to 100 m pending on installation conditions)
2. VALVE CABLE SPLITTER (**AVAILABLE Q3/2022**)
   Cable splitter for Valve Cable allowing simultaneous control of 2x ball valves (e.g. on hot and cold water supply in apartments with central water heater).
3. SENSOR TAPE EXTENSION CONNECTOR (**AVAILABLE Q3/2022**)
   Extension connector for Sensor Tape enabling the use of additional Sensor Tape (3m) for a total 6 m measurement range.
   NOTE: For additional range above 6 m, use the wireless Water Sensor.

4. SENSOR TAPE CABLE SPLITTER (**AVAILABLE Q3/2022**)
   Cable splitter for Sensor Tape w/3.5 mm Jack enabling simultaneous water detection on two (2x) Sensor Tapes.

Accessories - Mounting Brackets

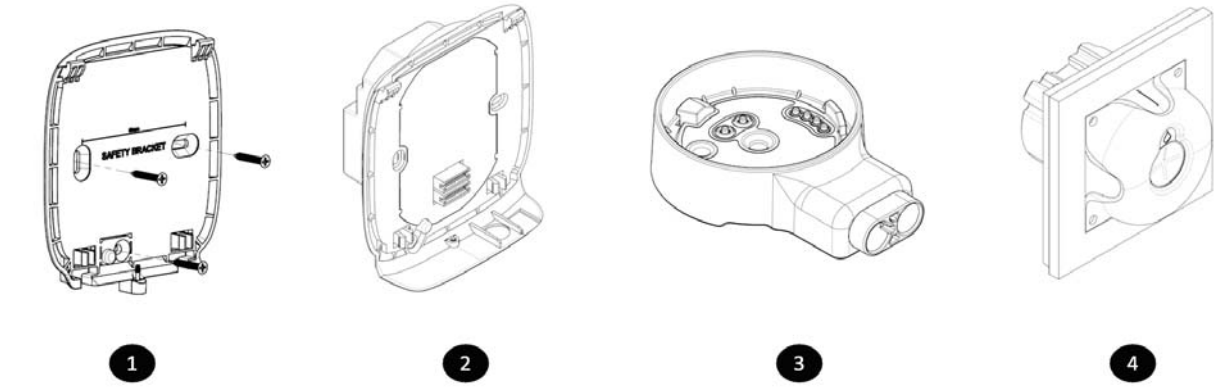

1. HUB - SAFETY BRACKET
   I&HAS (Intrusion & Hold-up Alarm System) compatible safety bracket for Hub Standard. Enables removal-from-mounting tamper detection. Compatible with optional Cable Protector preventing unnoticed dismounting of cables.
2. HUB - DOCKING (**AVAILABLE IN 2023**)
   I&HAS compatible docking for Hub with 230V AC to 24V DC power supply. Compatible with standard, 1.5 size wall box with hidden cables. Allows for connection to Sensor Tape w/3.5 mm Jack for water detection.
3. WATER SENSOR - BRACKET incl. POWER ADAPTER (**AVAILABLE IN 2023**)
   Bracket for mounting of Water Sensor to floor or wall, providing an interface to Sensor Tape w/3.5 mm Jack and 5V Power Adapter (included).
4. WATER SENSOR - DOCKING (**AVAILABLE IN 2023**)
   Docking station for Water Sensor with built-in 230V AC to 12V DC power supply. Compatible with standard, single wall box with hidden cable installation. Connects to Sensor Tape for water detection.

Safety regulations and information

- An automatic water shut-off system has the purpose of detecting and limiting a water leak. There will always be some leakage before the water is detected and the water is shut off.
- In the event of a power failure, the ball valve maintains its position (OPEN or CLOSED).
- Before installation, the water supply must be disconnected.
- The installation and the use of the Waterguard system are subject to applicable national provisions.

- The water supplied to the system must comply with the European Drinking Water Directive. Additives and particles may cause inadvertent effects such as blocking the ball valve or inducing wear on sealing surfaces.
- The Waterguard system must only be used in good order and condition, as intended, and with safety awareness by adhering to the operating instructions.
- No liability is assumed for damage caused by non-compliance with the operating instructions.
- Use only original spare parts and accessories to ensure safe system operation and a valid warranty.
- The system should only be installed in a frost-free and dry environment.
- Carefully read the user and installation manual before installing the Waterguard system and save them for future needs.
- The ball valve must be installed by a certified plumber following the installation instructions. This is required to ensure safe operation and to obtain an insurance discount*.
- The Waterguard system is based on a low-voltage electrical system architecture (24V). This ensures the system is inherently safe from a user perspective, and certified electricians are not required to perform the electrical installation.
- Ensure the ball valve is installed before connecting the power adapter. Operating the ball valve without installation poses a significant risk of crush damage to fingers or objects inserted into either valve opening orifice.
- The valve unit or its parts must not be dismantled when the tap water system is pressurized.
- Avoid danger or reduced functionality due to damaged cables. In the case of damage, the cable must be replaced by the manufacturer, its customer service department, or a certified electrician.

** Selected insurance providers only*

Installation instructions

Important notes regarding valve installation

- Valves shall be installed in a dry and frost-free environment and shall be accessible for service.
- A separate filter must be installed upstream of the valve(s) if large particles or objects may be present in the water.
- Make sure that any thread sealing material does not enter the valve during assembly. This may reduce the leak tightness of the valve.

- Valves shall be mounted on the water pipeline, downstream of;
    - manual shut-off valves
    - water meters
    - pressure reduction valves
    - outlets for fire sprinkler systems
    - outlets for emergency cooling of heating systems
    - hydrophore / hydro press or similar equipment
    - rewinding filters

Ball valve body installation - 1/2" (DN15) and 3/4" (DN20) valves

Install a suitable size Waterguard ball valve (1/2" (DN15) or 3/4" (DN20)) to brass, stainless steel, galvanized, or hard steel pipes using the appropriate joining method. The valves have G1/2 (DN15) and G3/4 (DN20) ISO-228 female threads on both ends.

The valve may be installed in horizontal or vertical directions and is bi-directional (allowing flow in either direction).

Ensure the valve stem is level with or pointing upwards above the horizontal line. This ensures the motorized actuator is not at the lowest point, causing potential water accumulation.

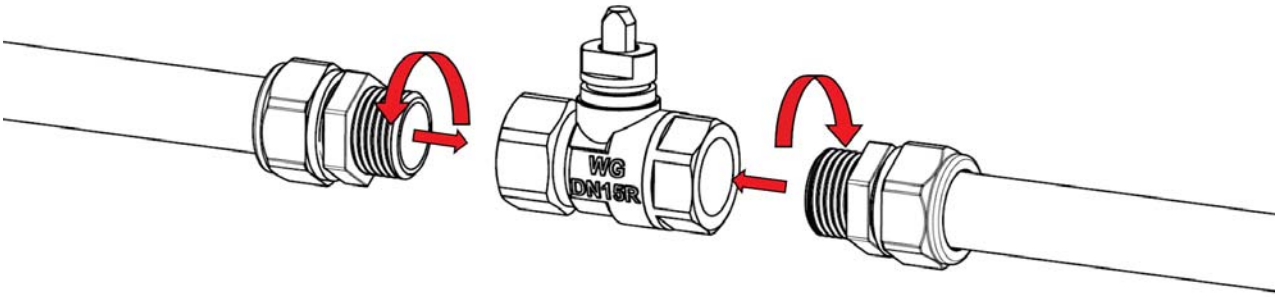

Actuator installation - 1/2" (DN15) and 3/4" (DN20) ball valves

1. Assemble the actuator to the valve in the desired orientation by pushing the actuator down onto the valve stem.

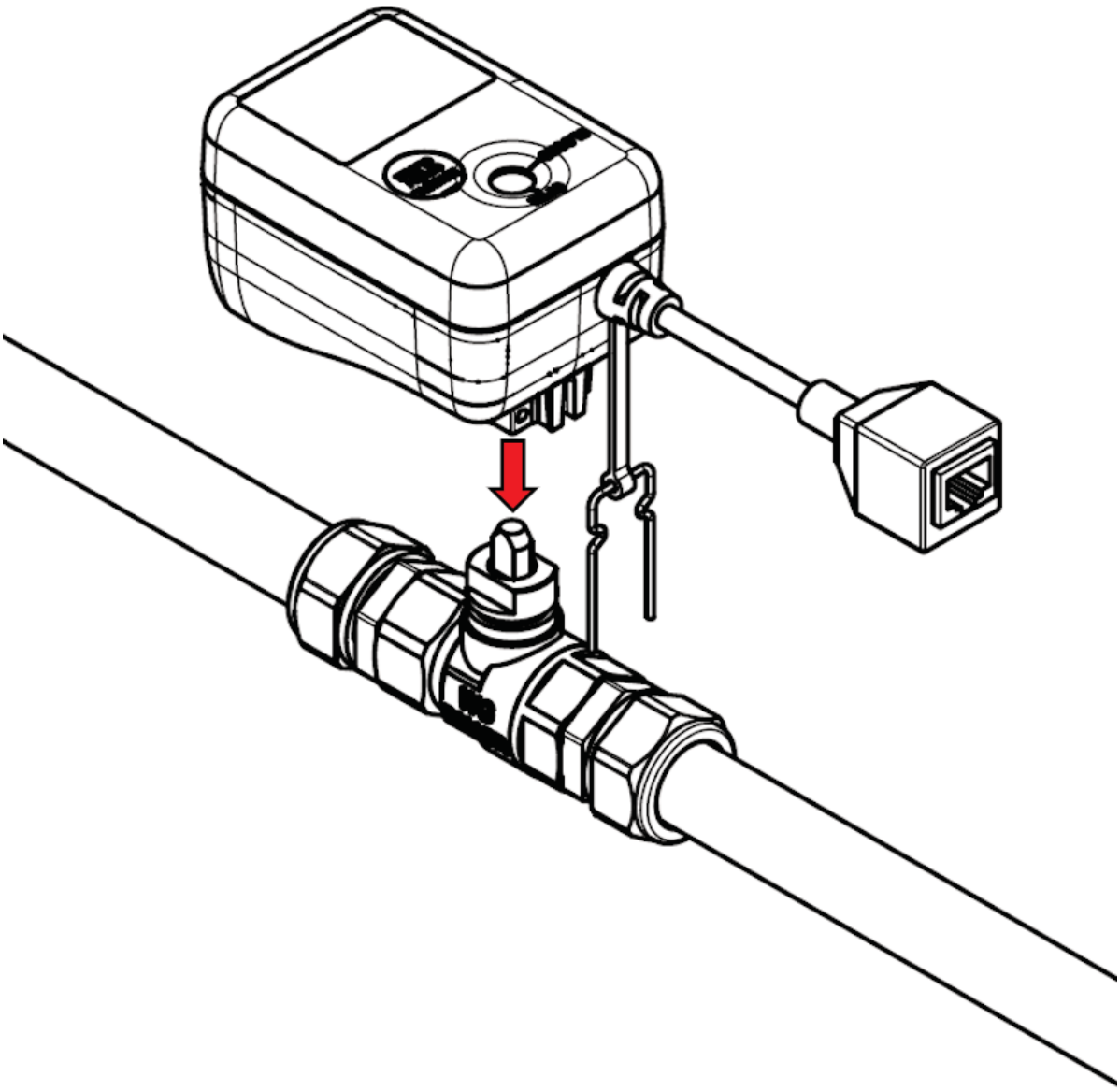

If the valve stem is properly aligned with the actuator interface (see image below), go to step 3. If not, see step 2.

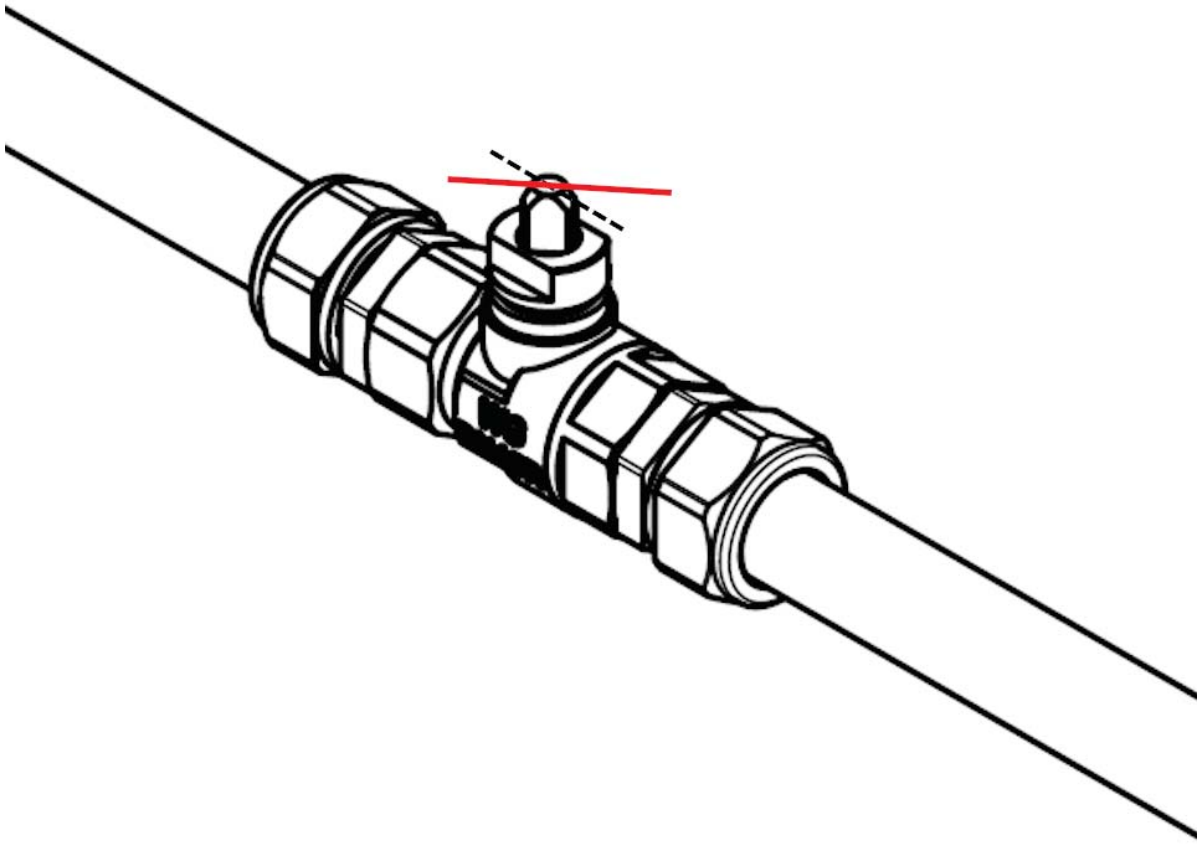

2. Turn the actuator until it engages with the valve stem and align the actuator with the pipe.

3. Push actuator down.

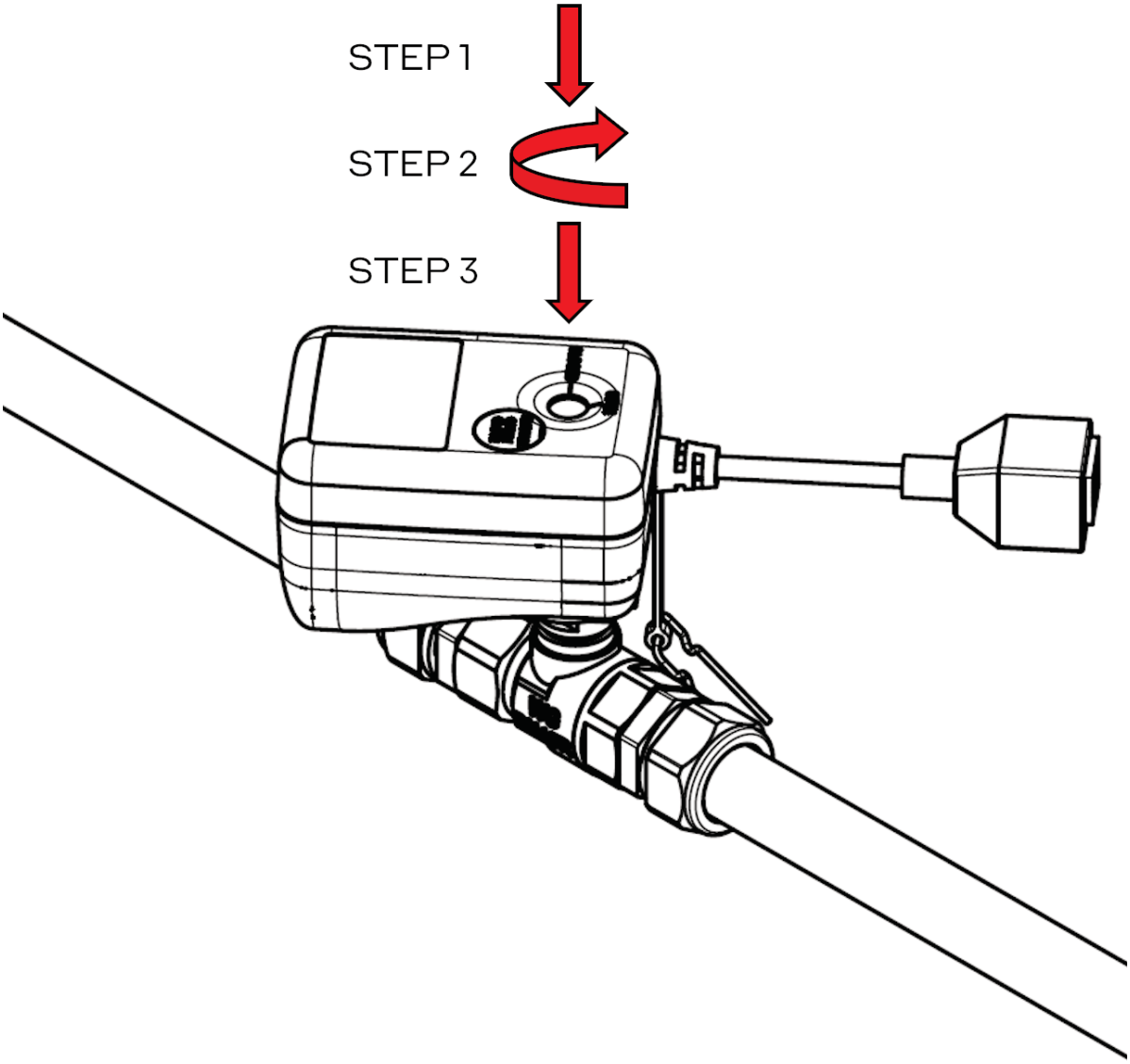

4. Install the steel clip attached to lock the actuator. A tactile and audible "click" provides evidence that the clip is securely locked in place. Check that the valve actuator is secured by pulling on the actuator in the opposite direction of installation.

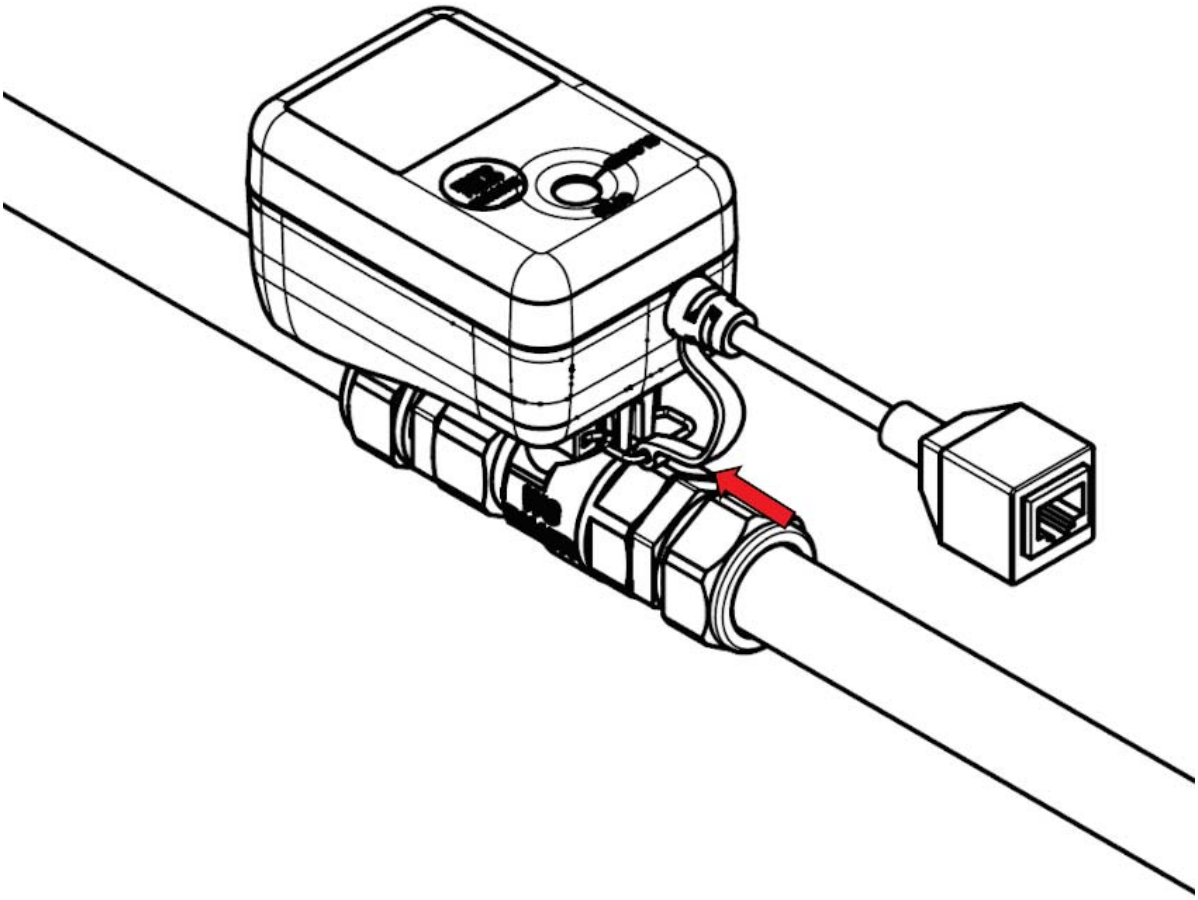

5. Insert communication cable. Push until an audible "CLICK" is heard and tactile feedback is felt.

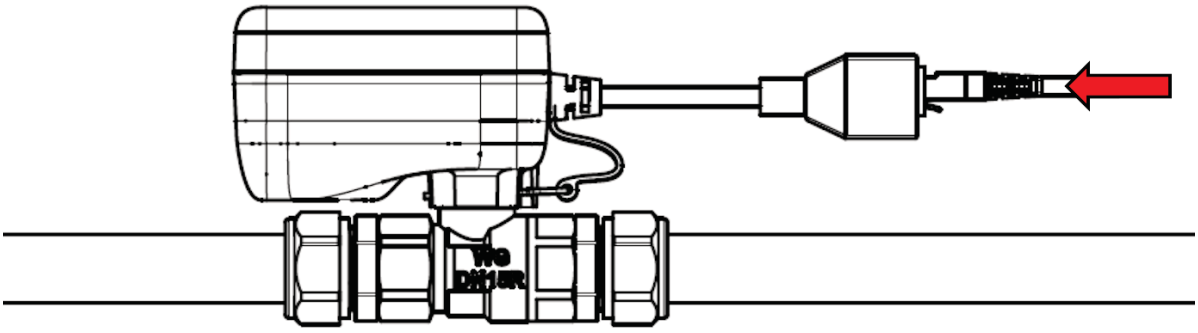

Magnetic solenoid valve body installation - 1" (DN25) to 2" (DN50) valves

Install a suitable size Waterguard ball valve (1" (DN25) to 2" (DN50)) to brass, stainless steel, galvanized, or hard steel pipes using the appropriate joining method. The valves have G1 (DN25) to G2 (DN50) ISO-228 female threads on both ends.

The valve may be installed in horizontal or vertical directions. The valve is *uni-directional*, and water must flow in the direction of the arrow on the valve body.

Ensure the valve anchor is level with or pointing upwards above the horizontal line. This ensures the magnetic solenoid is not at the lowest point, causing potential water accumulation.

Solenoid installation - 1" (DN25) to 2" (DN50) magnetic valves

1. Align the solenoid wiht the valve anchor.
2. Push solenoid down until an audible "CLICK" is heard and tactile feedback is felt.

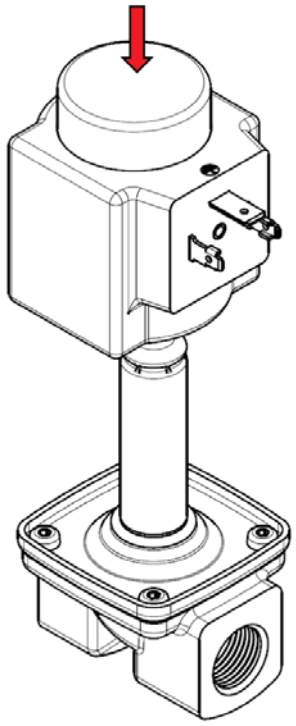

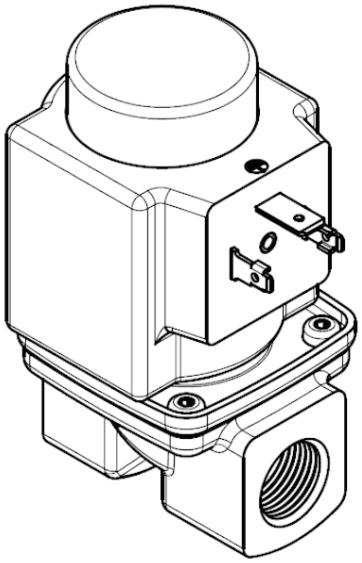

Power Adapter installation for Solenoid Valves

Information: The magnetic solenoid valve operates at 230V AC and not at 24V as the motorized ball valves.

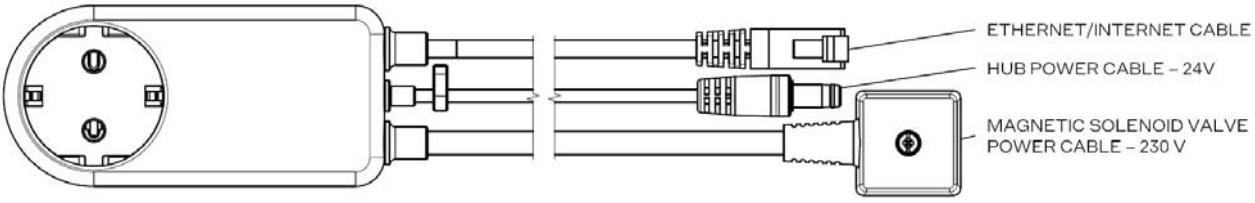

1. Connect the ethernet/internet and power cable to the Hub

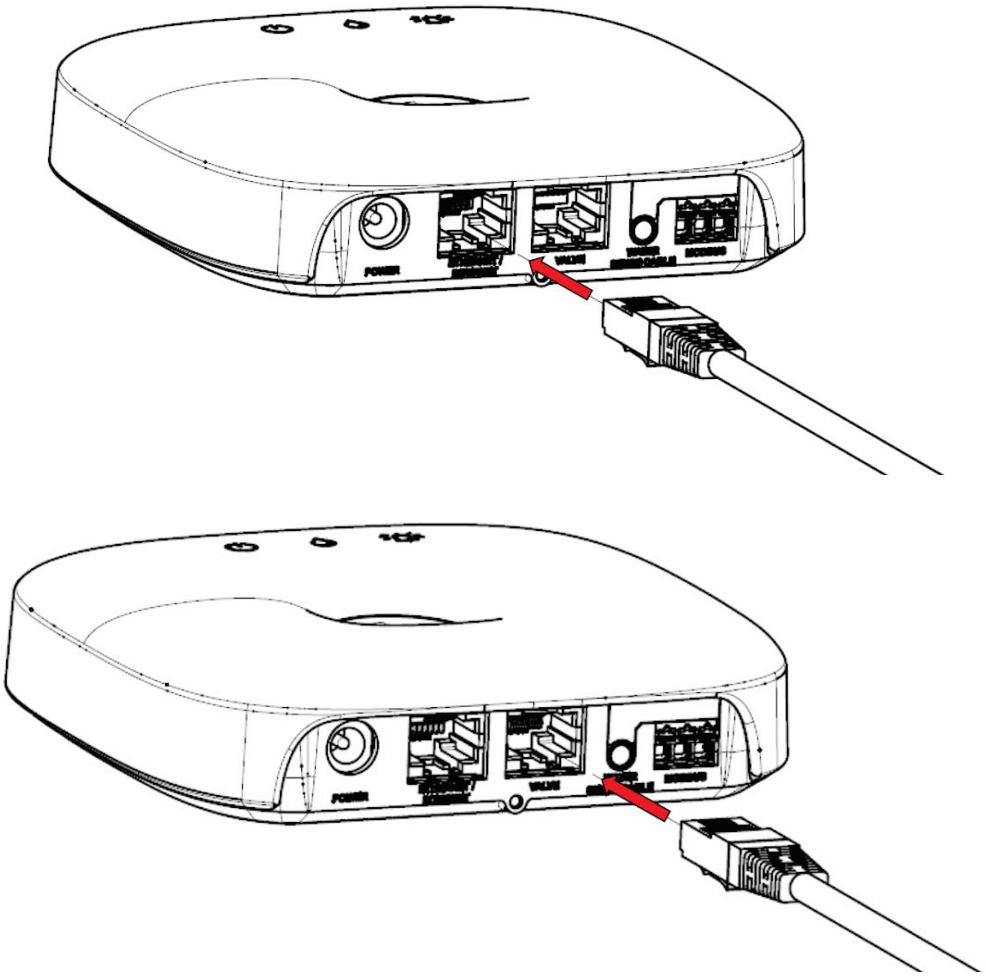

2. Install and secure the power cable to the magnetic solenoid valve

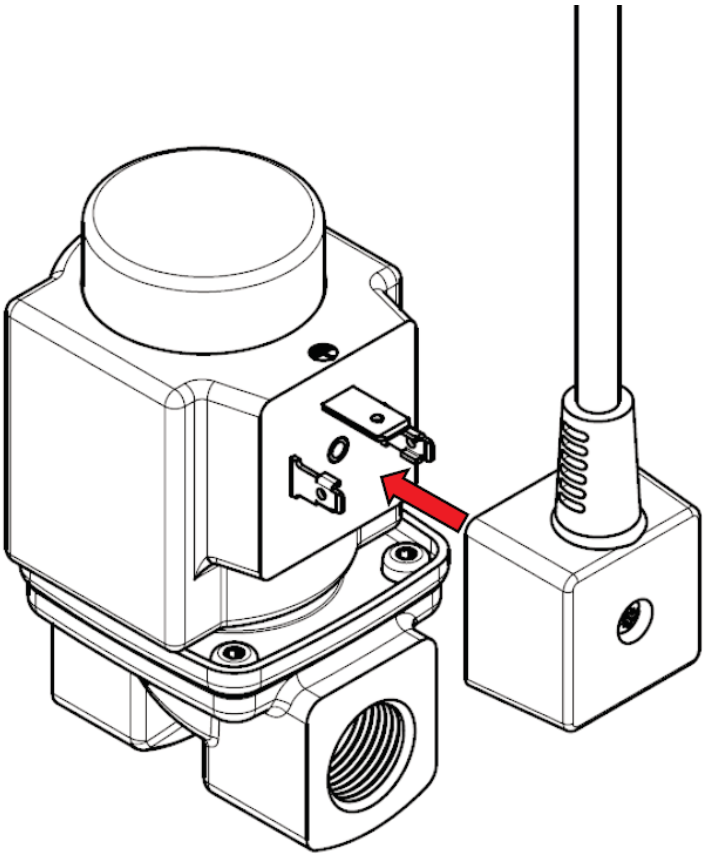

3. Plug adapter into a 230V AC

Hub installation

Using Hub Bracket (default)

1. Mount the Hub Bracket to the wall using the included Hub Mounting Kit screws (35 mm long). If using alternative fasteners, make sure they do not protrude outside the recessed screw interface on the bracket, as this prohibits proper installation of the Hub.

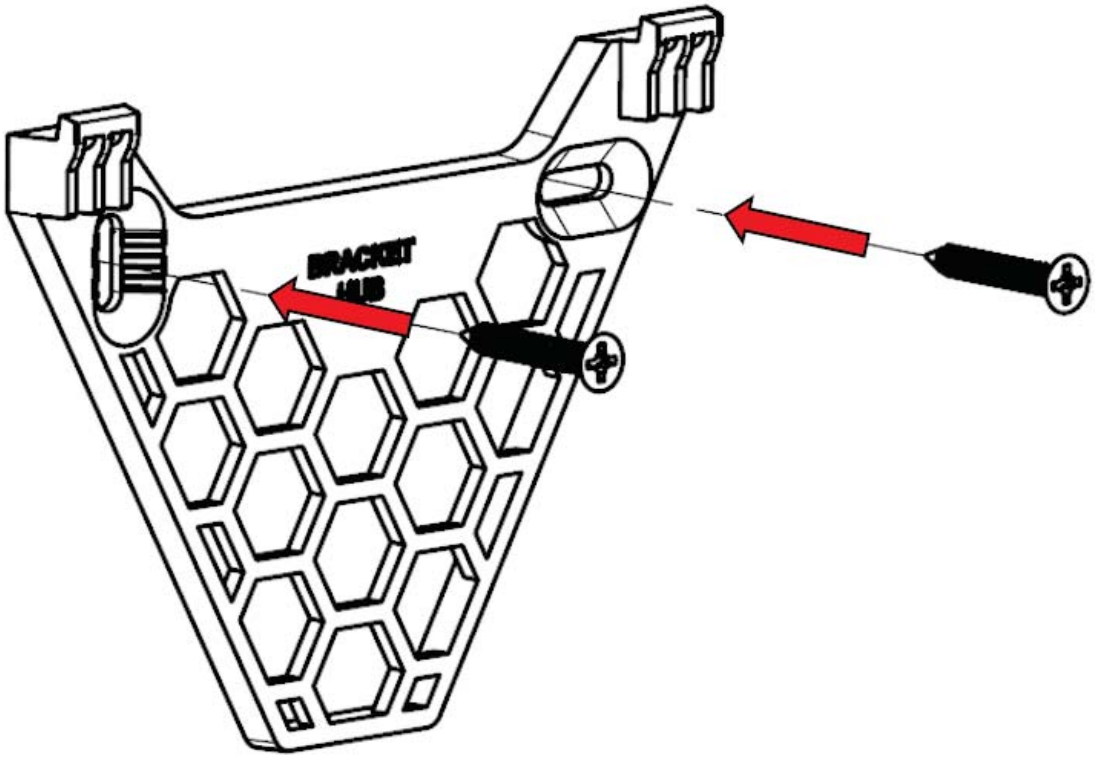

2. Install the cables to the Hub
    - Power cable (Ø5.5 mm DC male connector)

    - Valve cable

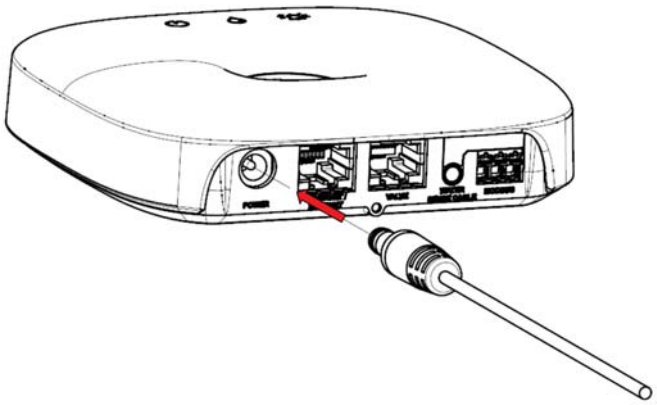

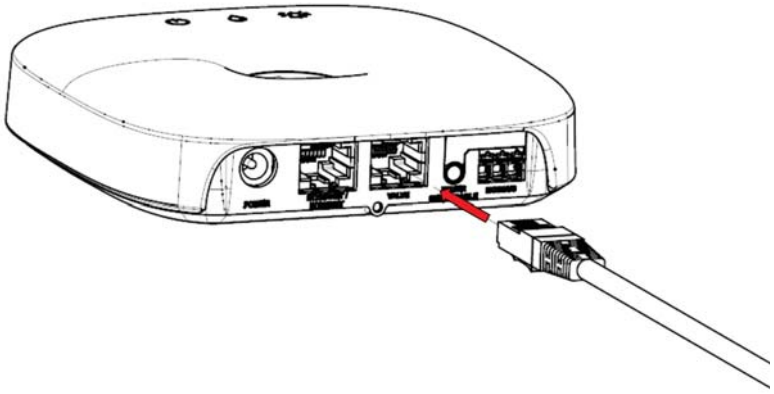

    - Sensor tape

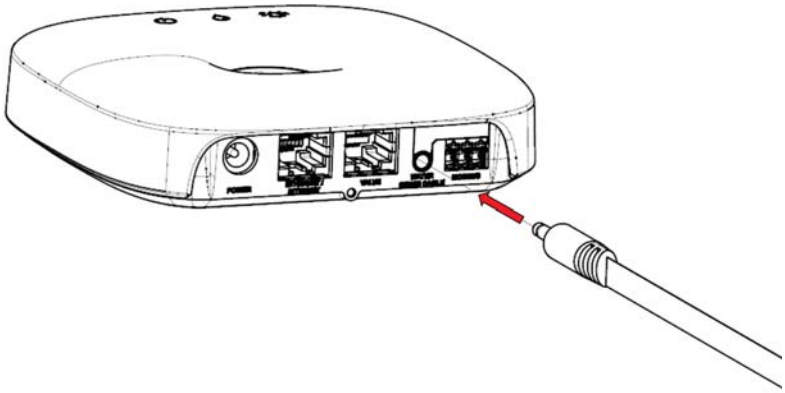

- Ethernet/internet cable (*optional*)

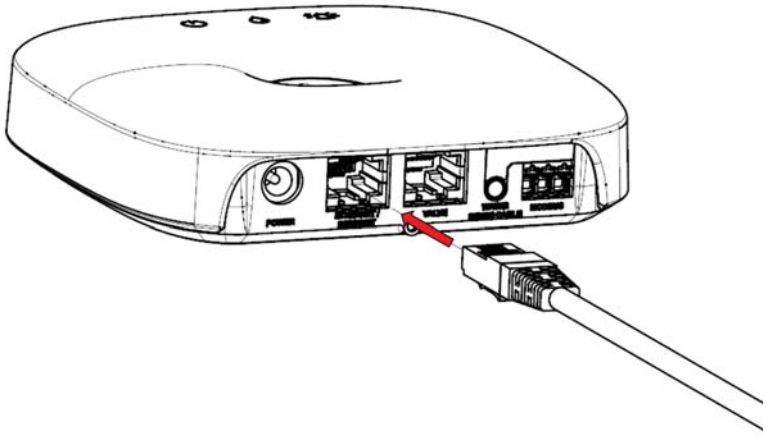

3. Attach the Hub to the Wall Mount Bracket by engaging the "hooks" and pushing the Hub down, following STEP 1 and STEP 2.

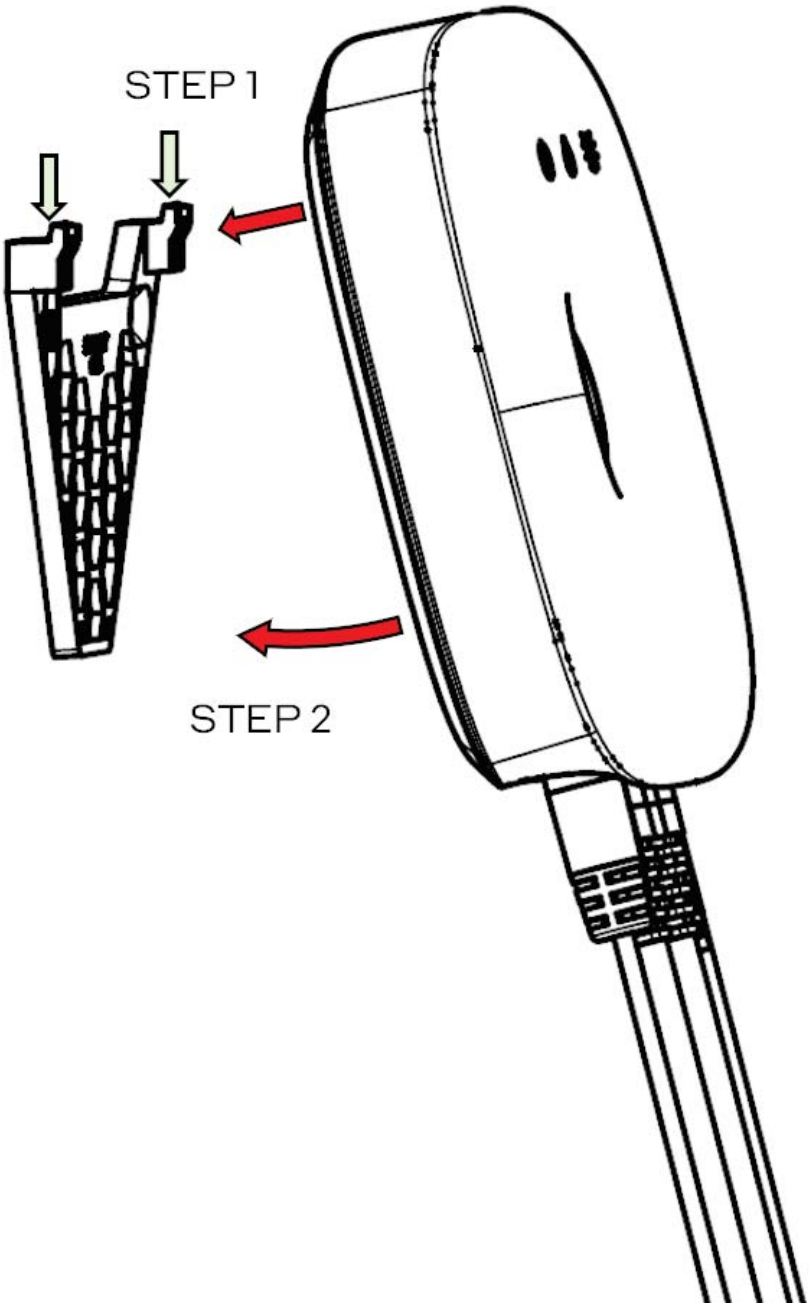

Hub Safety Bracket - when Hub is used in an intrusion and hold-up alarm system (I&HAS)

1.

1.

1. Mount the Hub Security Bracket to the wall using the included Hub Mounting Kit screws.

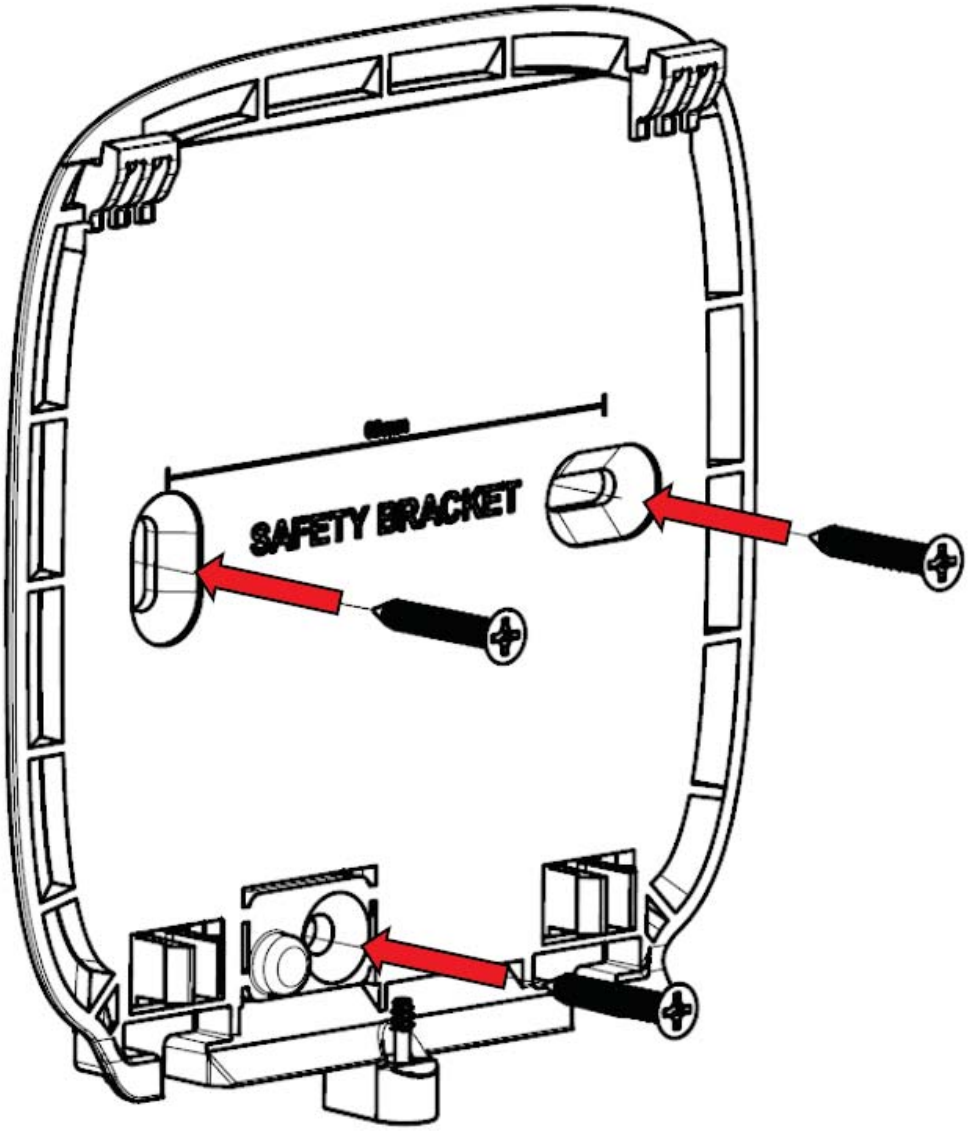

2. Install the power cable (Ø5.5 mm DC male connector), valve cable, sensor tape, ethernet/internet cable (optional), and Modbus cable (optional).

3. Assemble the installed cables into their designated location in the cable protector.

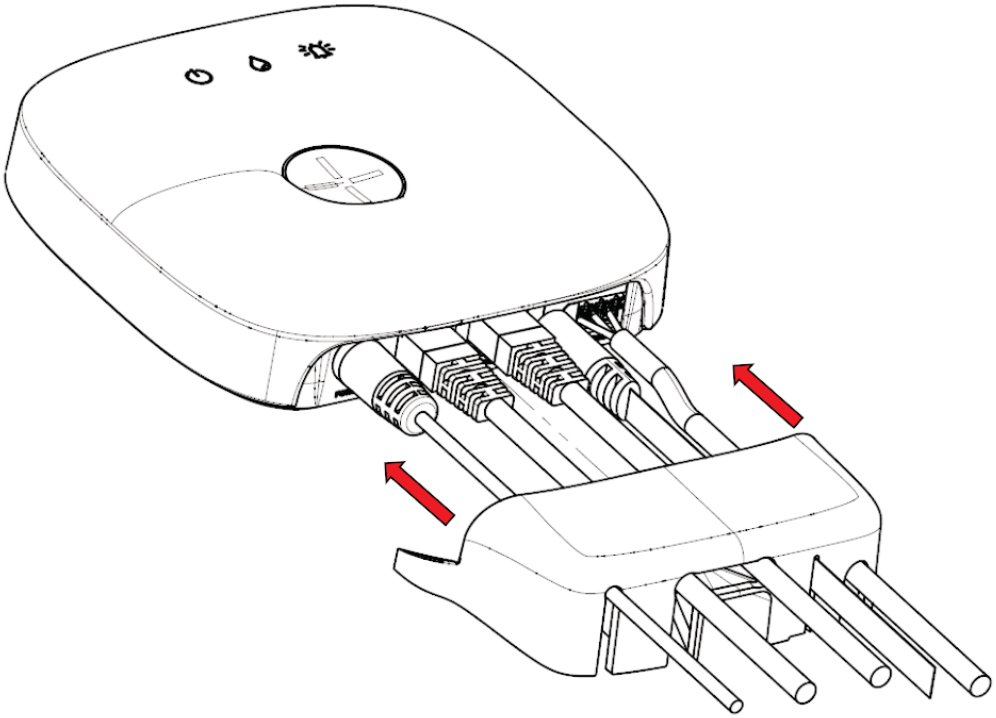

4. Slide the cable protector along with the cables to the bottom of the Hub.

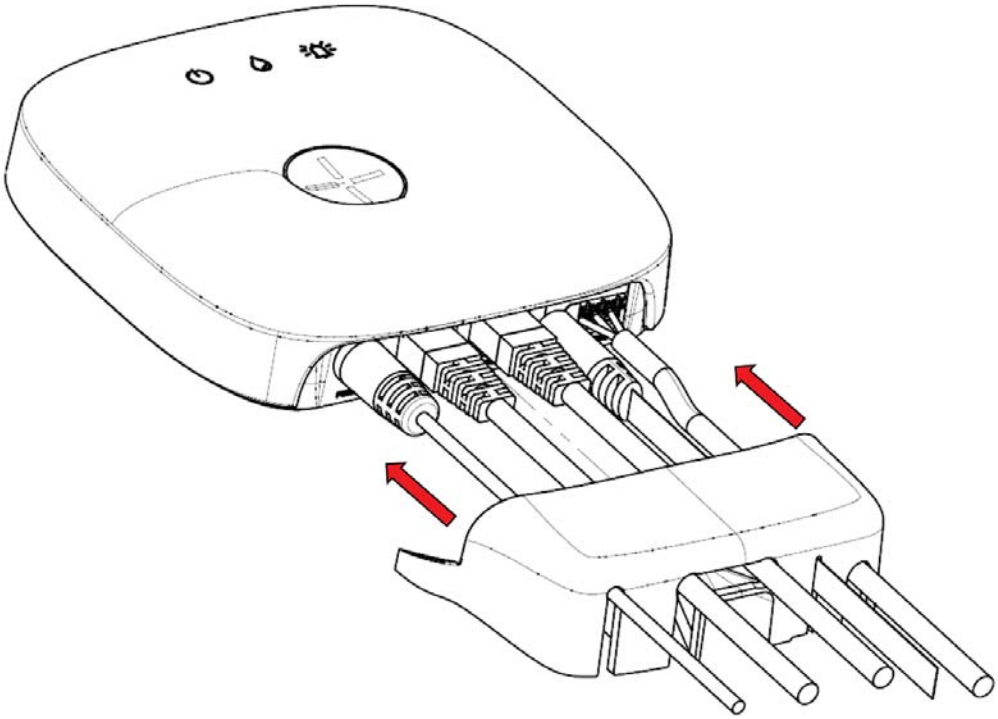

5. Attach the Hub to the mounting bracket, by engaging 1) the two hooks on the top, 2) the cable protector onto the bracket and 3) the snap joints at the bottom. An audible “click” is heard when the hub is properly installed. Inspect the quality of fixation by ensuring the hub is flush with the bracket.

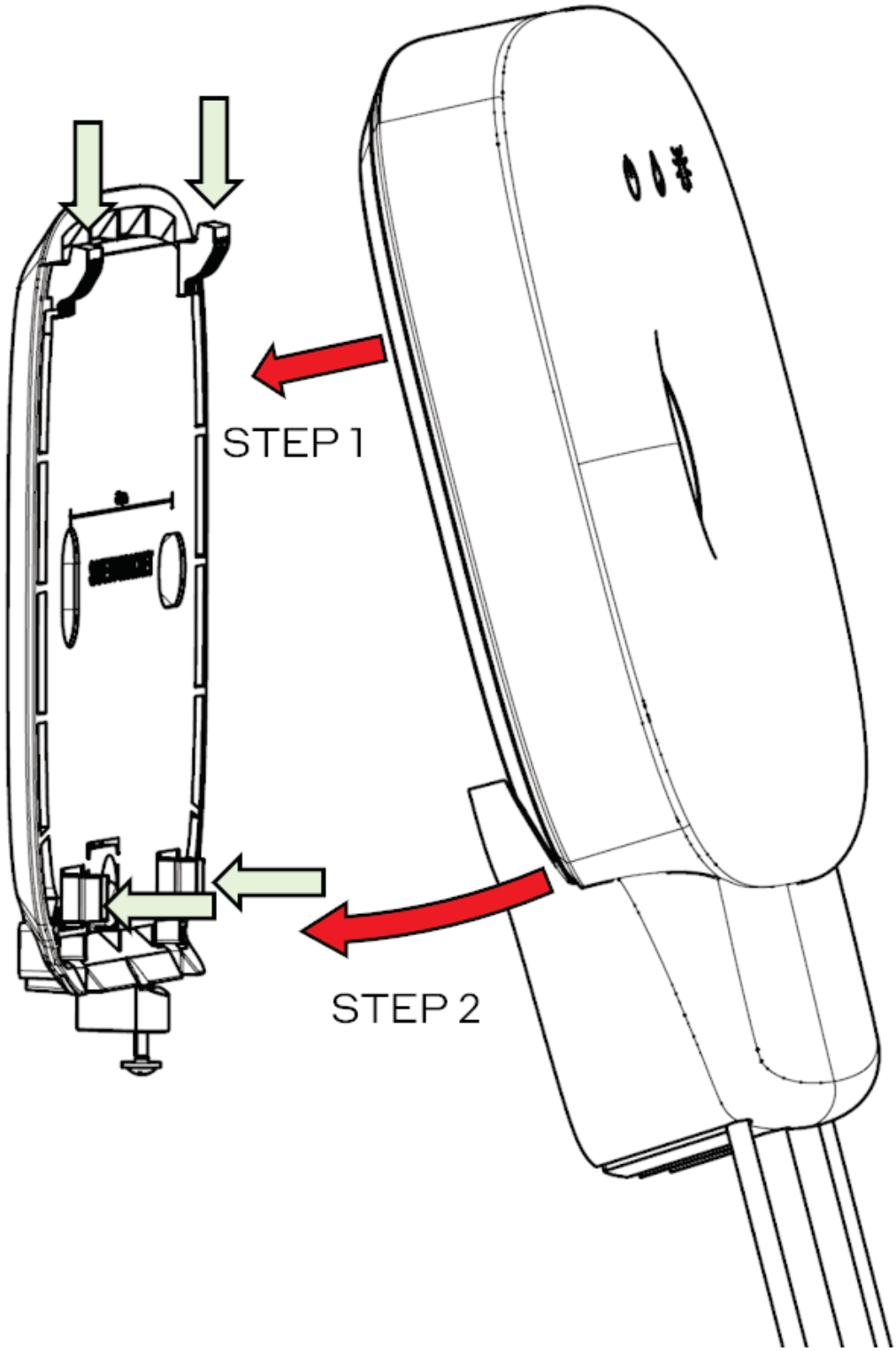

6. Use a Philips PH1 or PH2 screwdriver to tighten the screw at the bottom of the device. This will firmly lock your device in place in the event of severe impacts or vibrations.

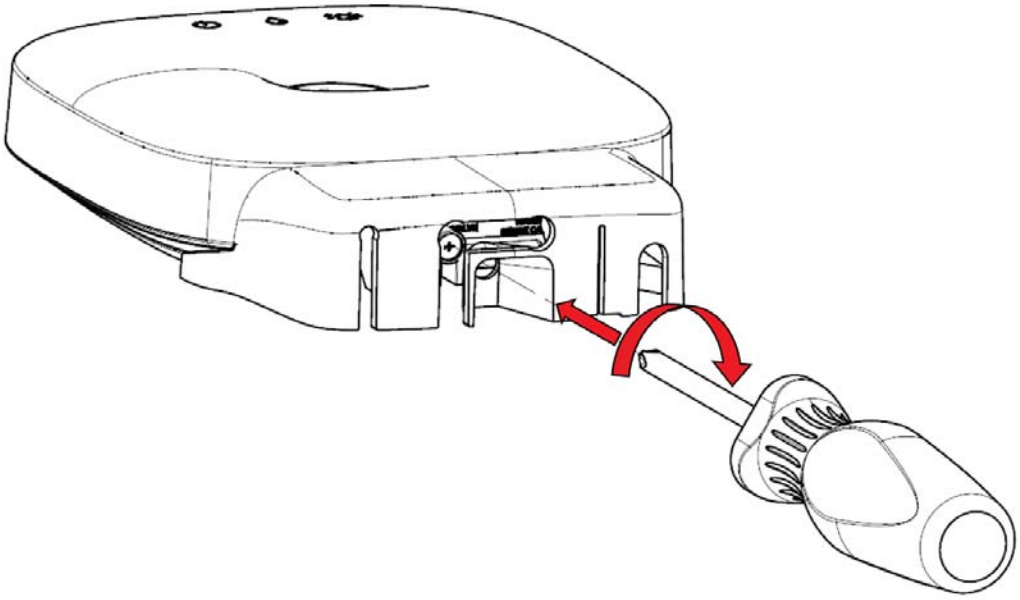

NOTE:

- We do not recommend using double-sided adhesive tape to mount the Hub; it may cause the Hub to fall in case of an accidental impact. Double-sided tape is **not** permitted for mounting when the hub is used as the Supervised Premise Transceiver (SPT) in an intrusion alarm system.
- The included valve cable is 2 meters long, however, any standard network cable with dual, male RJ45 connectors up to 100 meters may be used.
- Do not place the Hub
    - Onto, nearby, or inside metal objects (e.g., water distribution cabinet), as this may cause attenuation and reduction of the wireless signal range.
    - Nearby (< 1 m) other radio equipment (router or power cables) or sources of high radio interference levels.
    - In any location with temperature and/or humidity beyond the range of permissible limits.
    - Outside the premises (outdoors)

Hub Docking - for hidden cables and use in an intrusion and hold-up alarm system (I&HAS)

1. Install 1.5 size wall box (Elko and Schneider compatibility guaranteed) and run cables to the location of the box.

2. Install cables to the Hub Docking
    - Valve cable and ethernet/internet cable (optional)

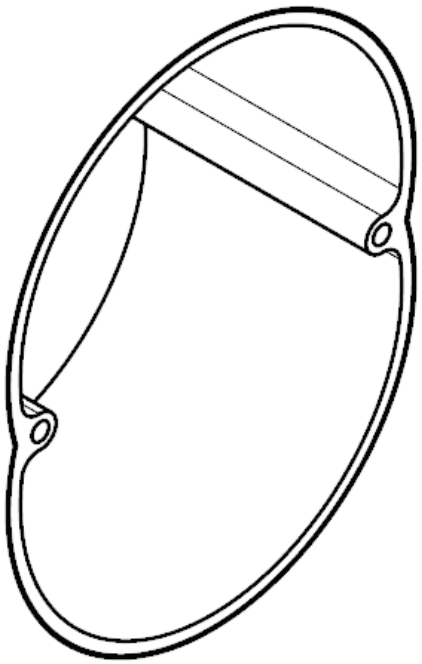

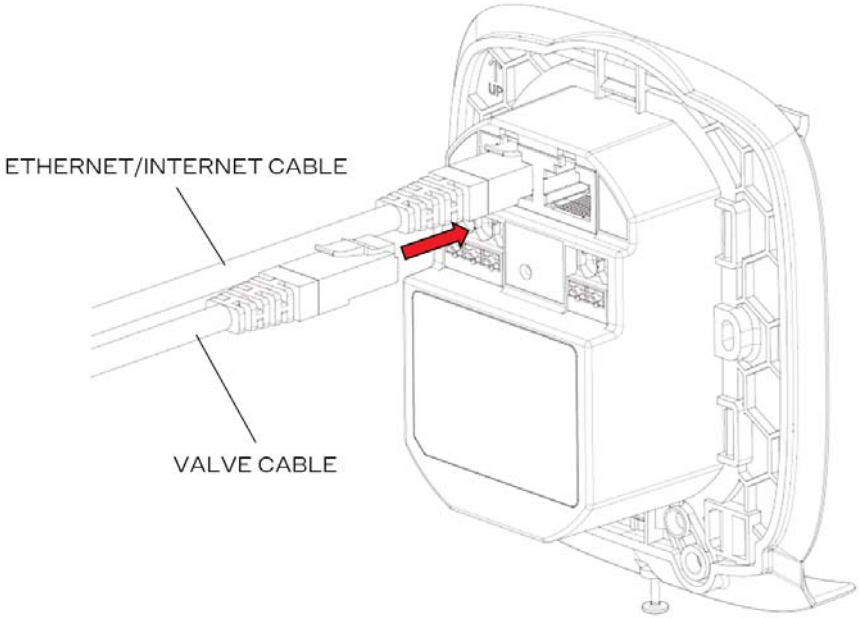

- Power cable (230V AC)

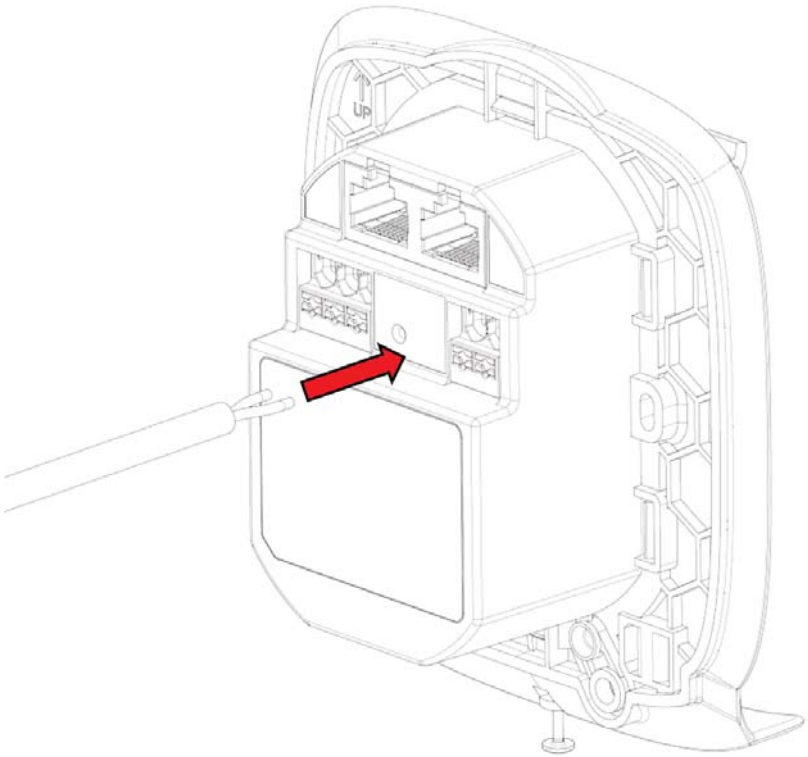

- Modbus cable

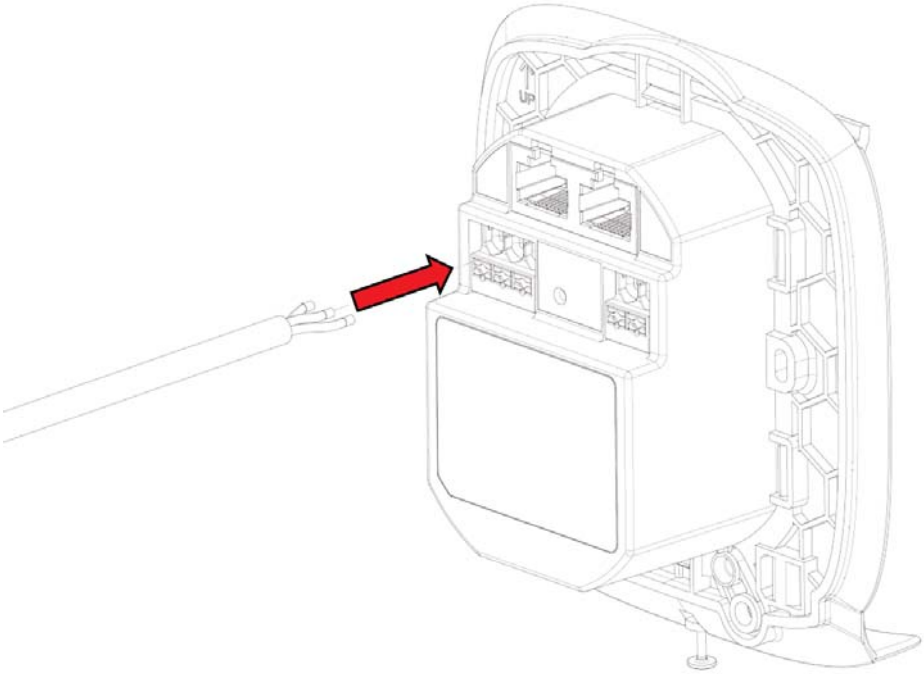

3. Install Docking into the wall box, attach Hub, secure screw at bottom of Docking and install Sensor Tape (optional)

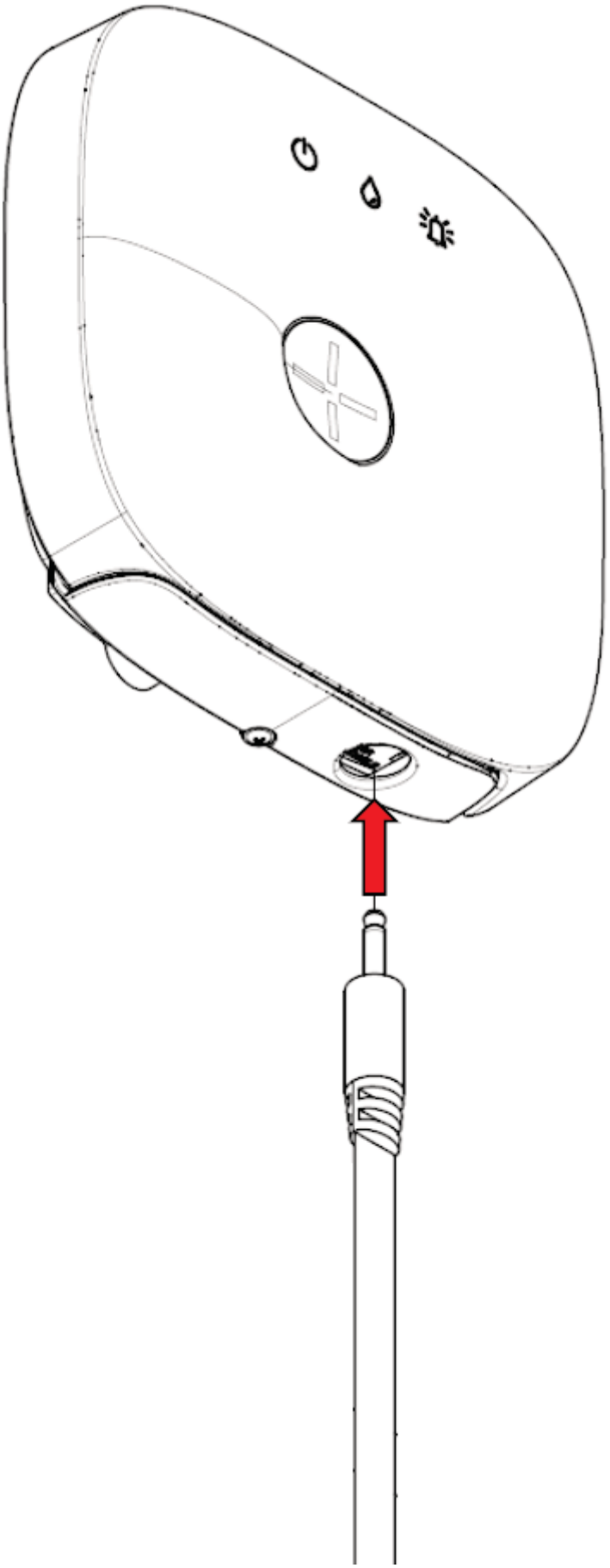

Sensor tape mounting

- Mounting the included Sensor Tape into the Hub or Water Sensor Bracket by mating the male and female Jack connectors.
- Remove the protective paper on the bottom side of the Sensor Tape. Attach the Sensor Tape to a clean and dry location on the floor that may accumulate water in case of a leakage. The Sensor Tape may also be attached to water pipelines.

Valve cable splitter installation

The cable splitter is an accessory product that allows for simultaneous control of two (2) valves from one (1) Hub.

1. Install 2x screws (not provided with product). Avoid over-tightening screws.

   OBS! Ensure connector openings are facing **down** to ensure proper water ingress protection.

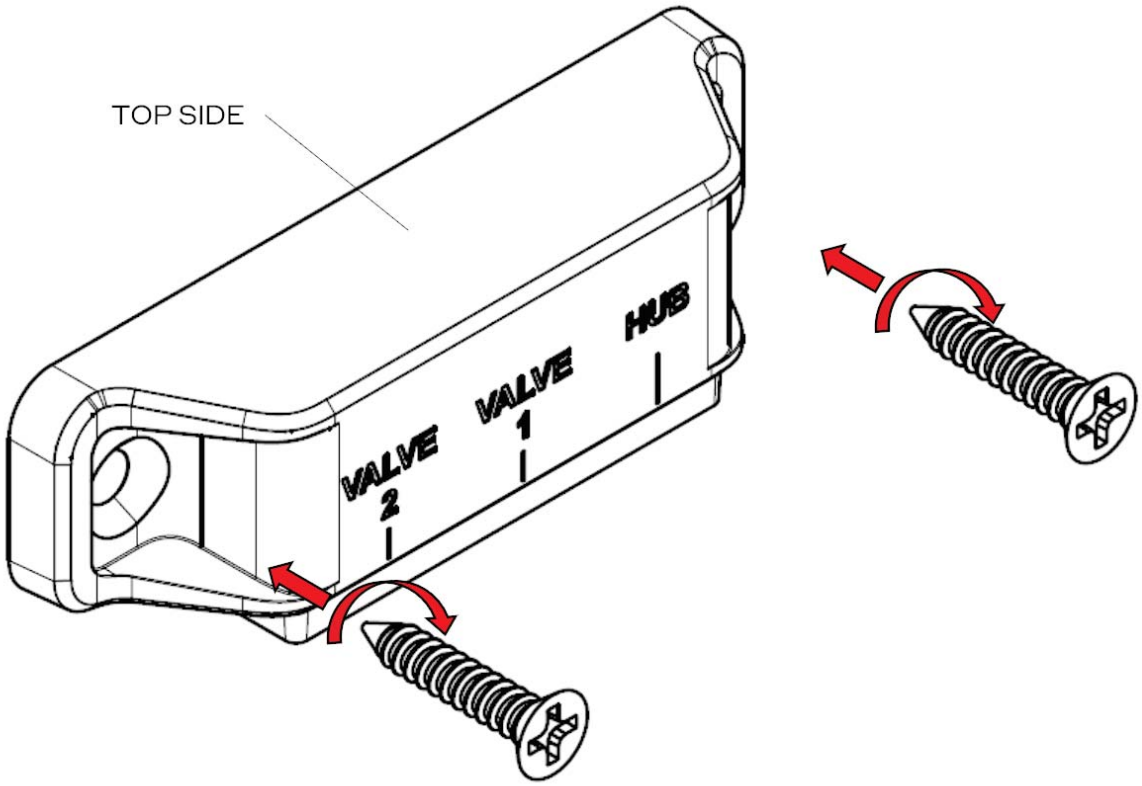

2. Align cables with the appropriate connectors

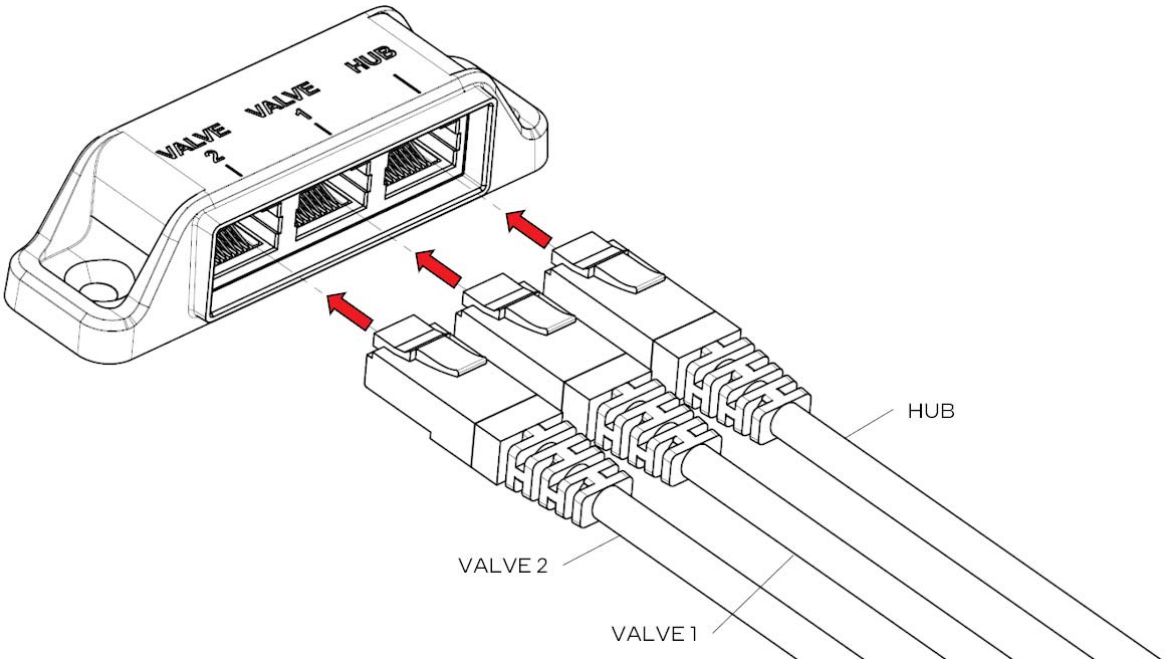

3. Push until an audible "CLICK" is heard and tactile feedback is felt.

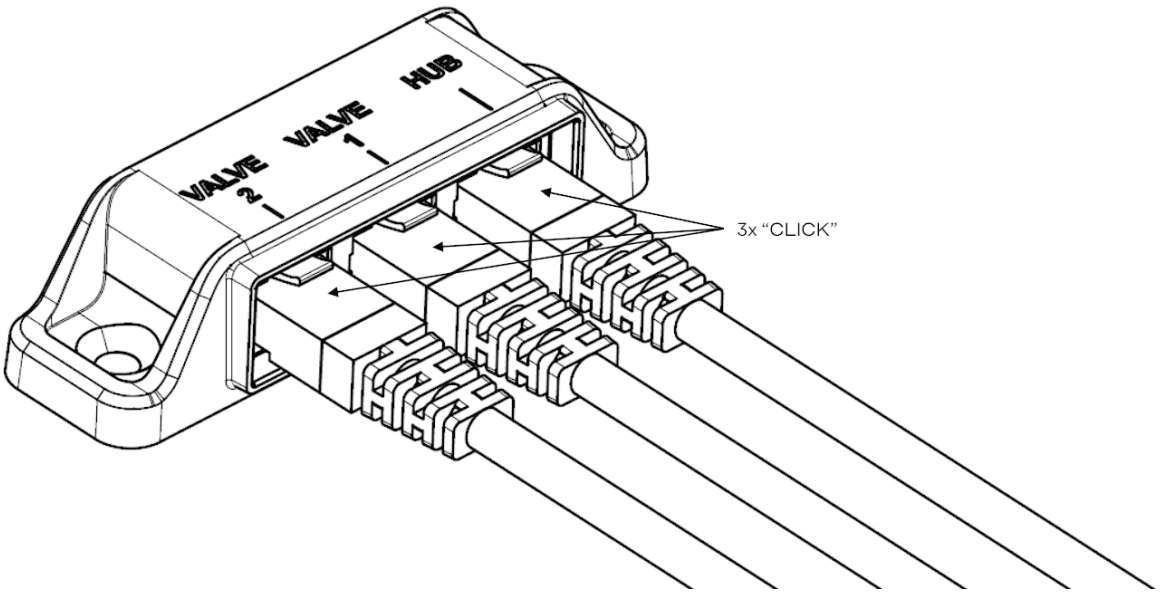

Water Sensor Bracket installation and Water Sensor mounting

1. Install the Water Sensor Bracket on the floor or wall using either a) a center-mounted screw (not included with the the product) or b) the included dual-sided tape.

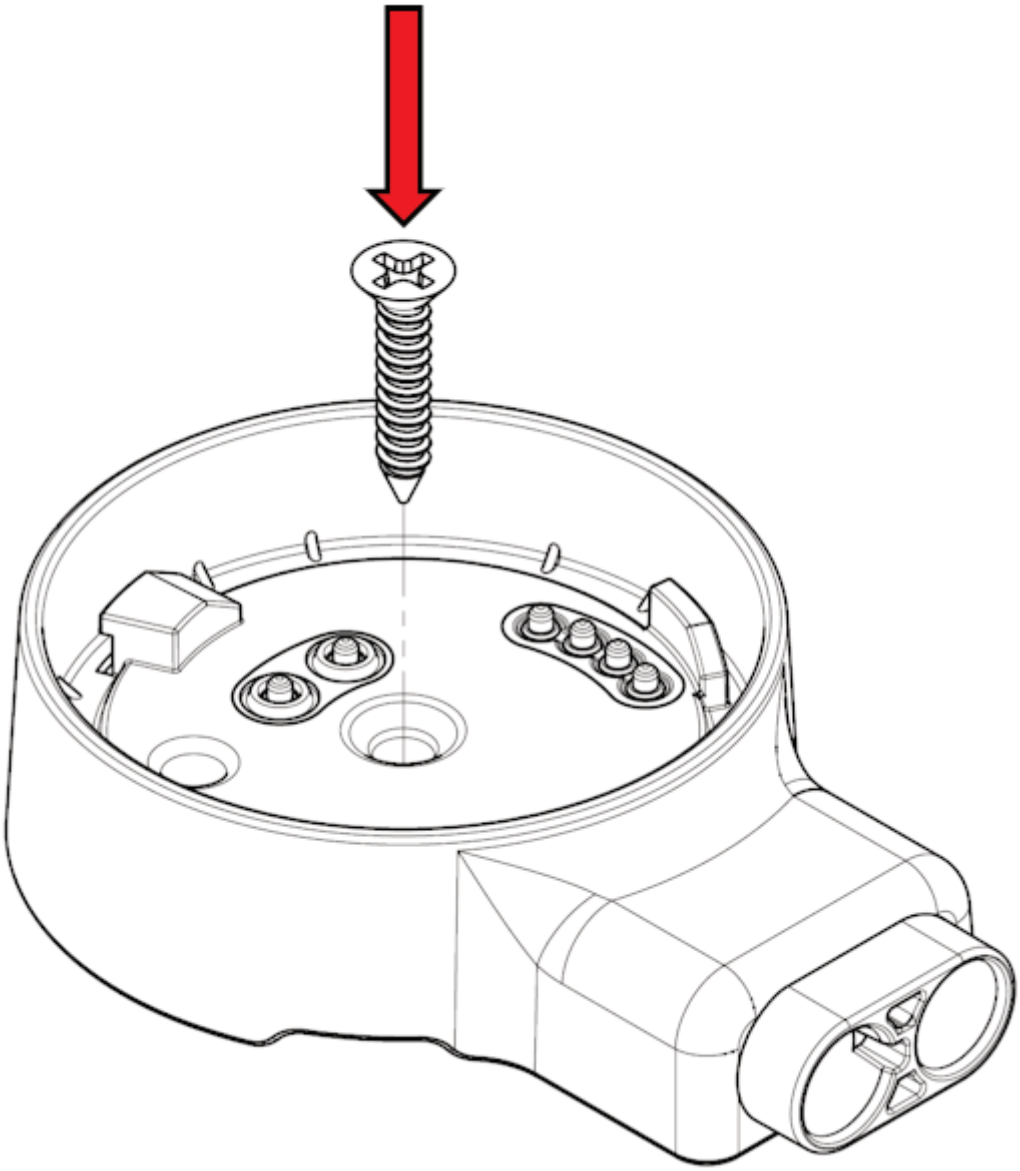

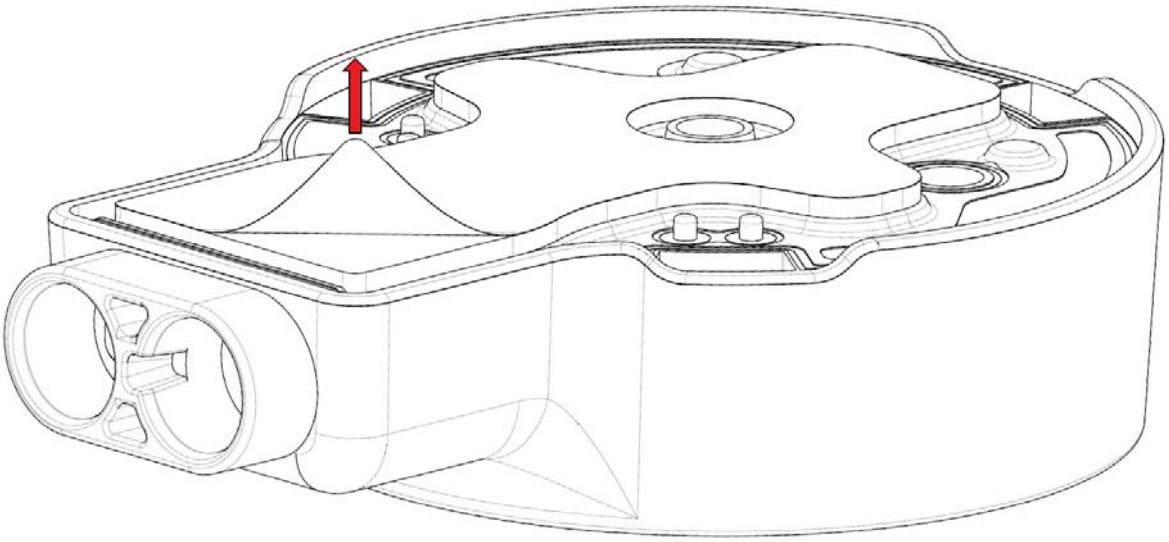

2. Align the indicator line on Water Sensor with the indicator line on bracket and install Water Sensor into bracket.

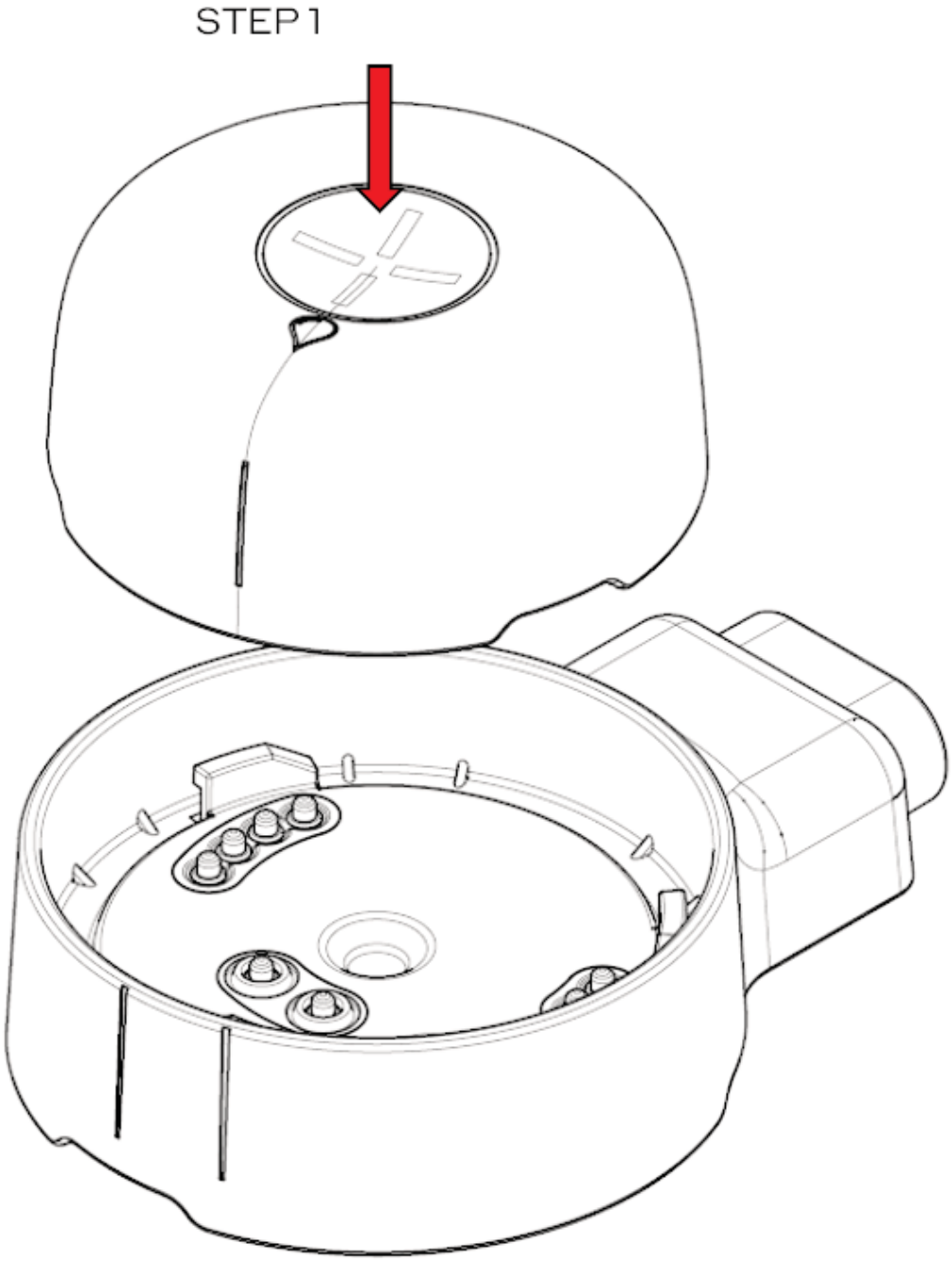

3. Turn Water Sensor in a clockwise (CW) direction until an audible "CLICK" is heard and tactile feedback is felt. Make sure indicator lines for the CLOSED position are aligned.

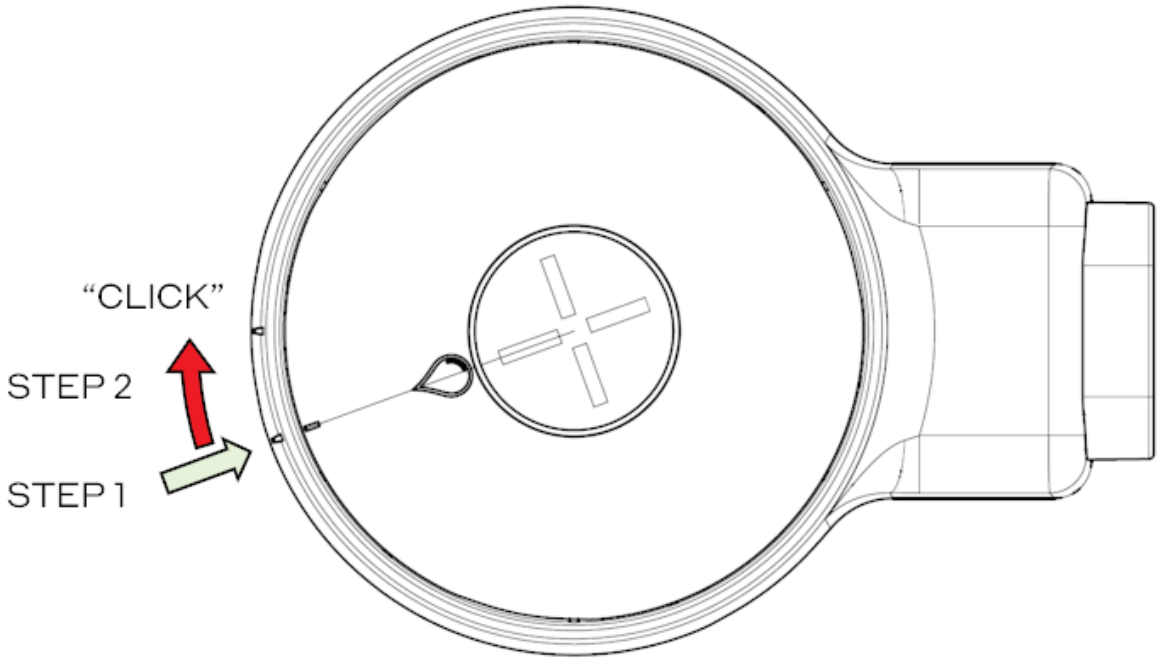

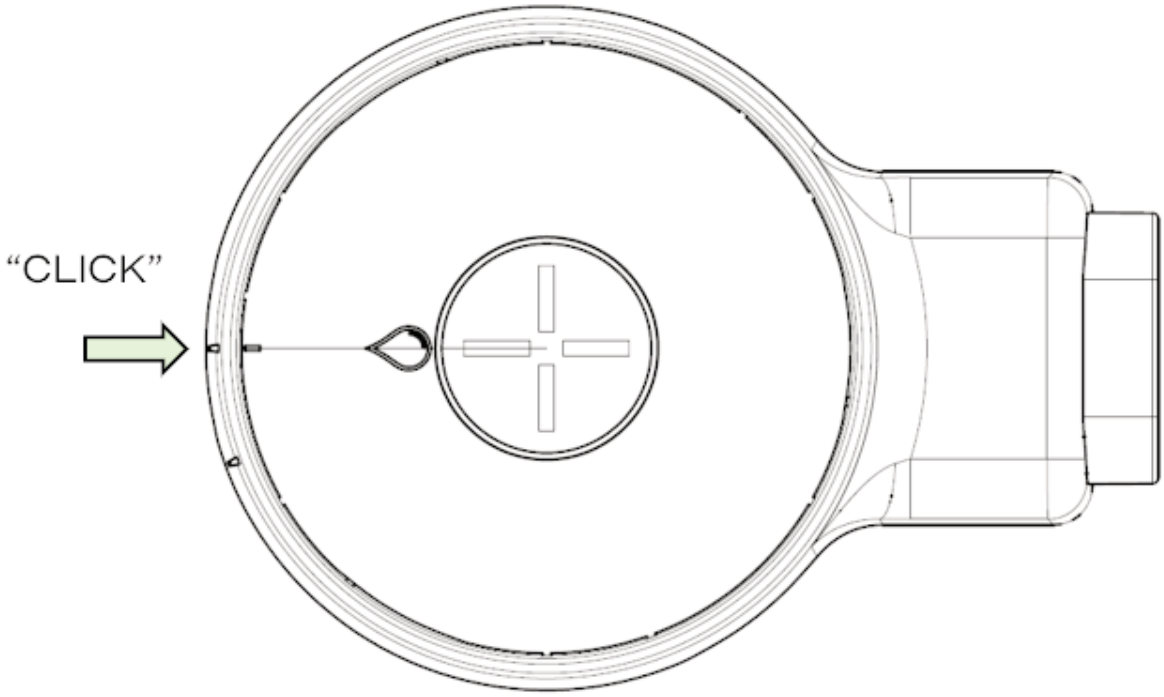

Power cable to Water Sensor Bracket installation

1. Align with right connector orifice

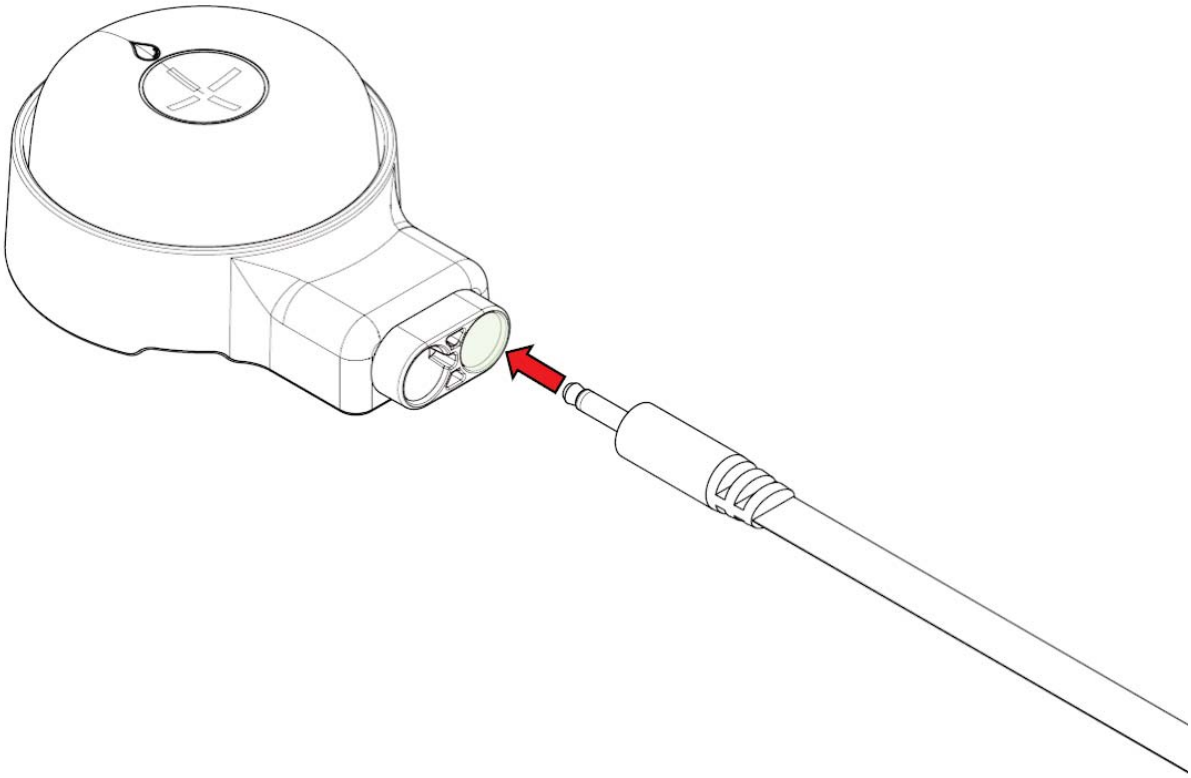

2. Push connector until reaching a firm end stop

OBS! The bracket is designed to seal towards the male connector end and requires higher than normal force to install the 3.5 mm Jack connector.

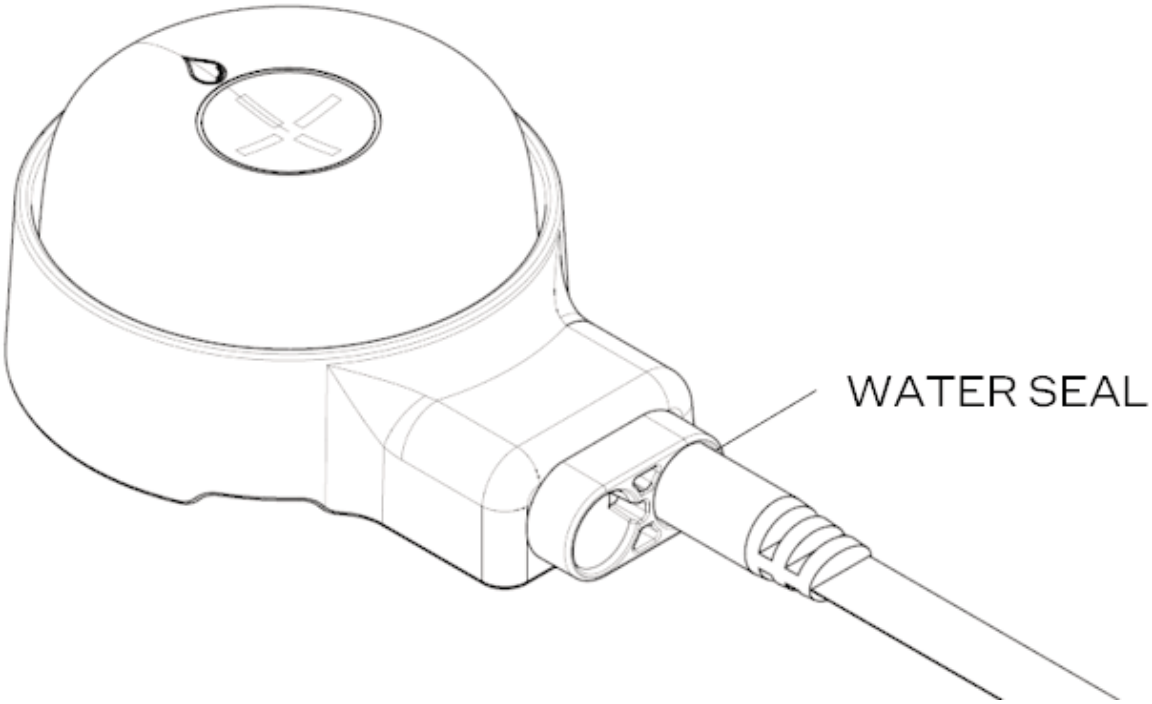

Sensor Tape to Water Sensor bracket installation

1. Align with left connector orifice.

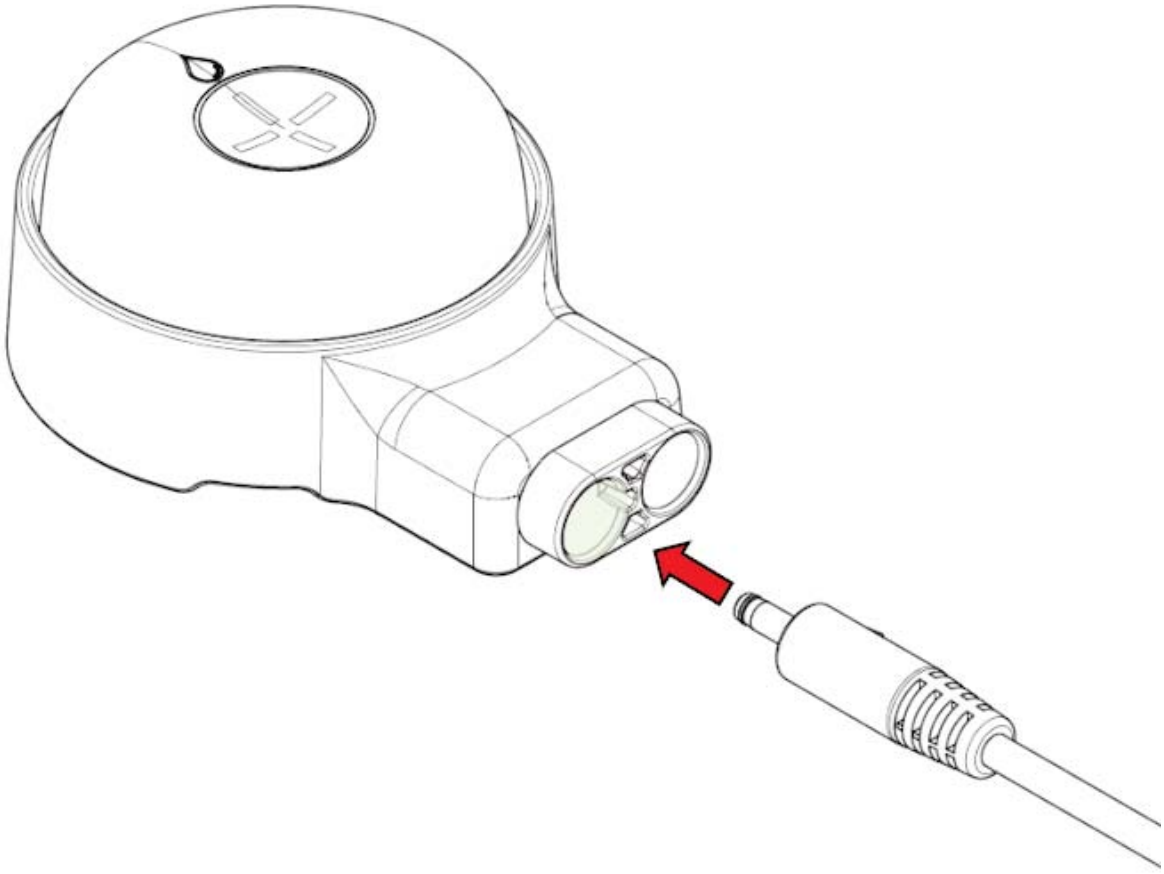

OBS! The power cable is designed to avoid using the wrong power supply or installation into the sensor tape connector and requires alignment of the male and female key shapes.

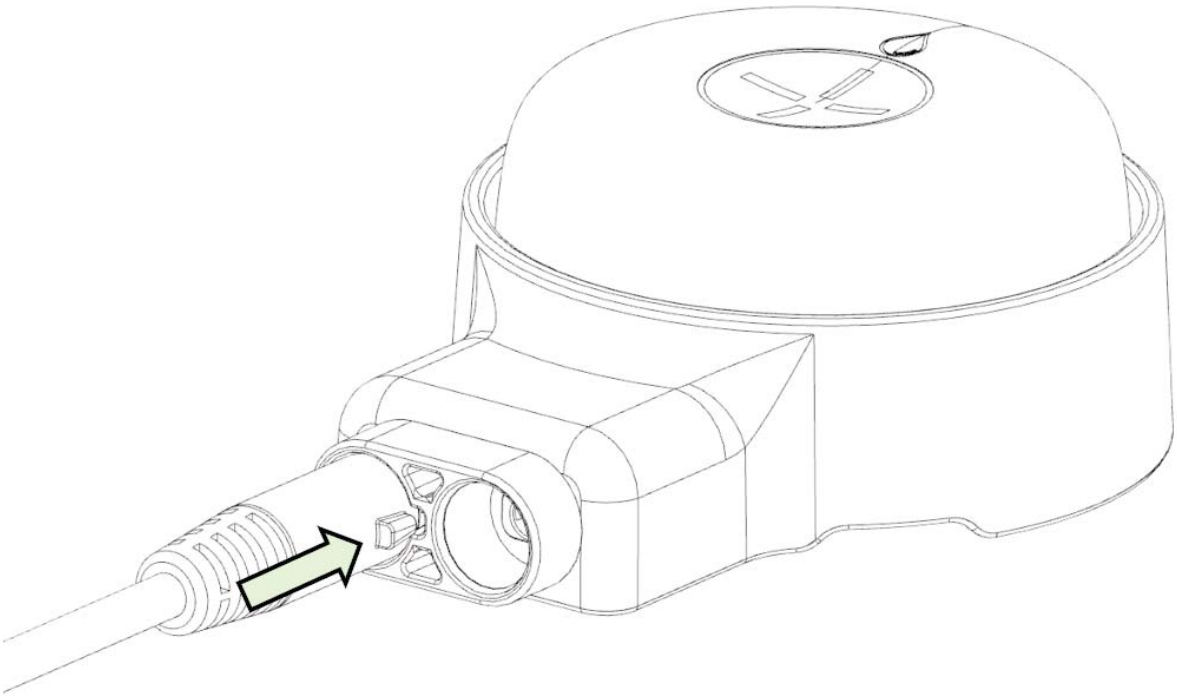

2. Push connector until reaching a firm end stop

   OBS! The bracket is designed to seal towards the male connector end and requires higher than normal force to install the DC barrel jack.

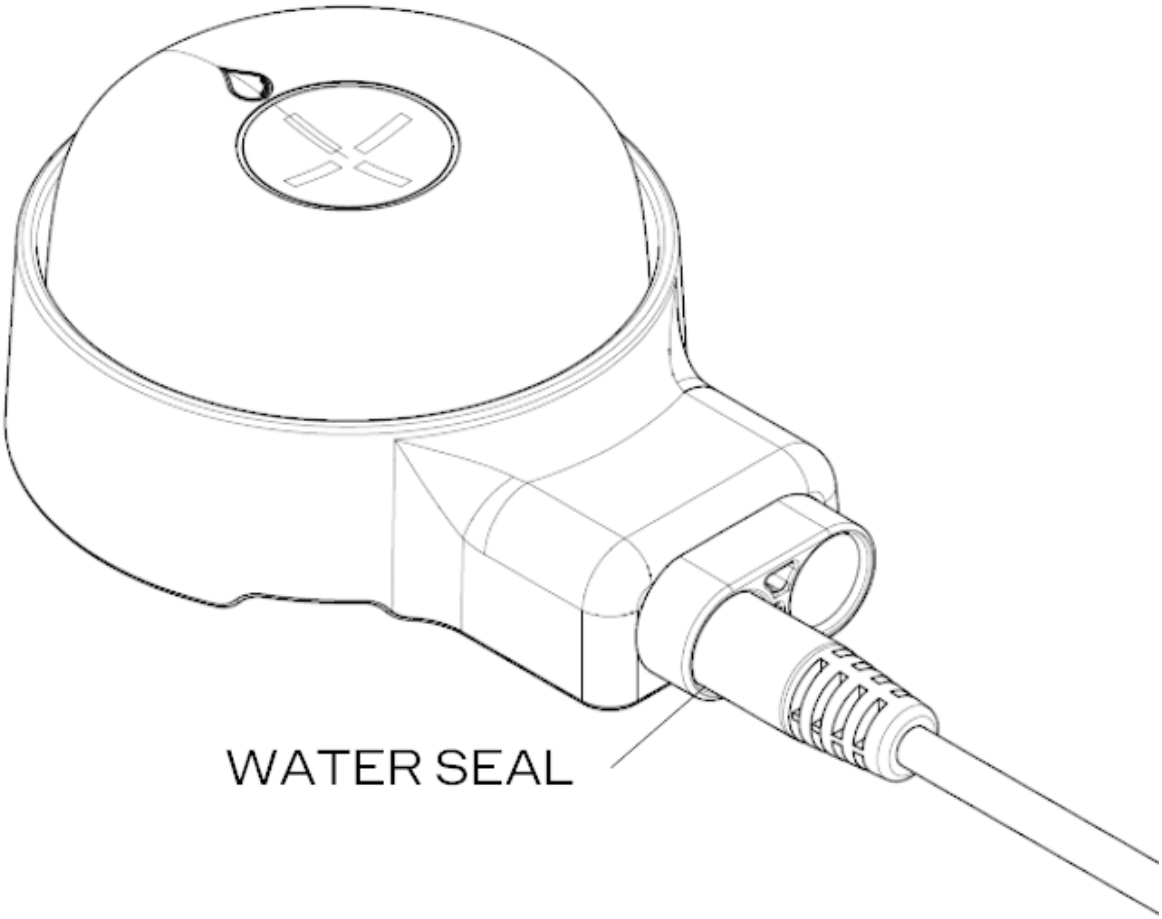

Integration with central building control systems (SD-anlegg) (AVAILABLE IN 2023)

The Hub can be integrated directly with central building control systems (Norwegian: SD-anlegg) through the Modbus interface. The interface uses a push-in type, 3- pole connector.

For detailed instructions on how to integrate and setup Waterguard with building automation and management systems (BAS/BMS), see article How to integrate Waterguard into building automation and management systems (BAS/BMS).

1. Install cables into the Modbus connector.

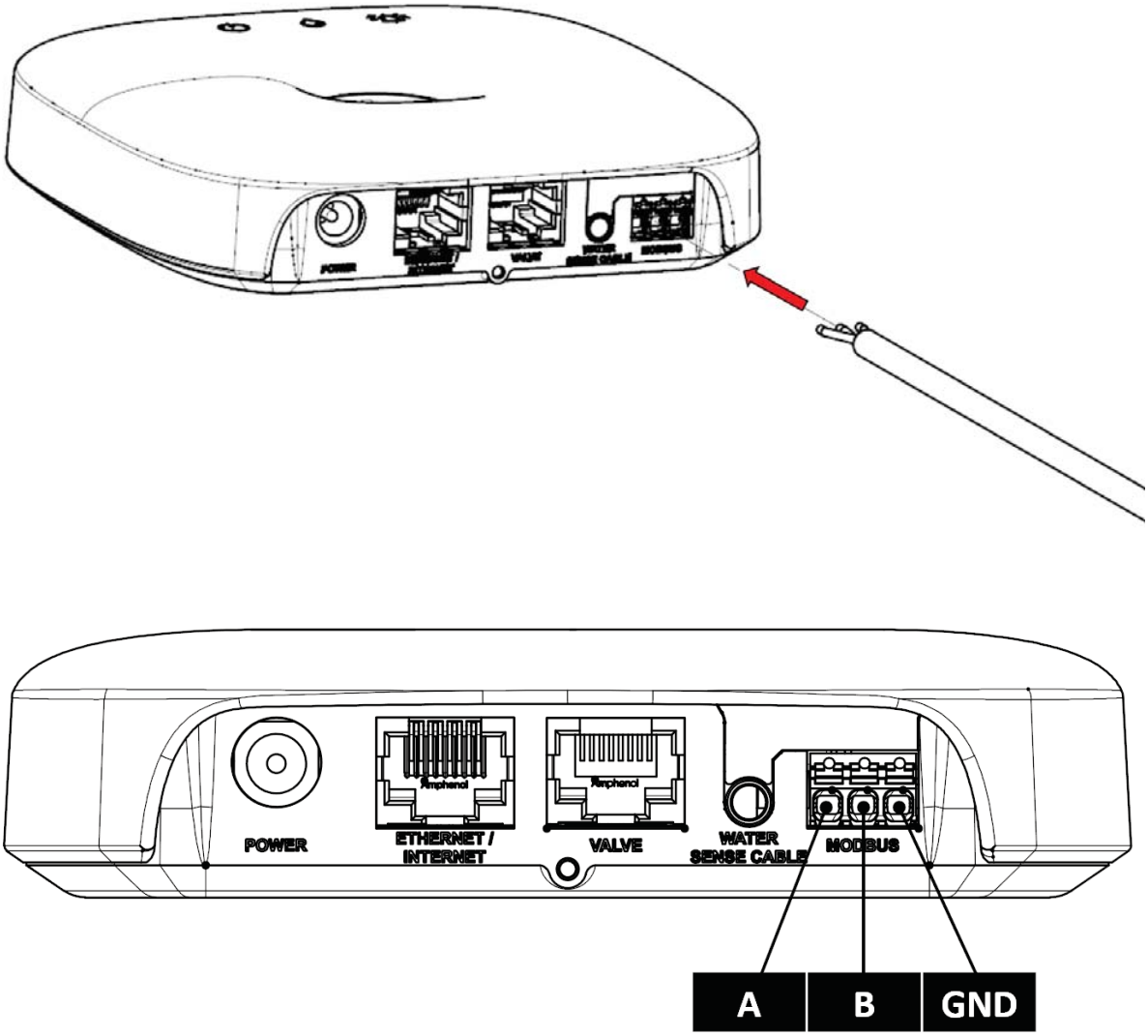

2. Pull cables after installation to ensure they are properly secured.

Installation configurations - Examples

Product	Icon	Product datasheets

Water Sensor		Water Sensor - Datasheet
Hub		Hub Standard - Datasheet Hub Lite - Datasheet
Valve		Valve Actuator - Datasheet Ball Valve DN15 - Datasheet Ball Valve DN20 - Datasheet

House

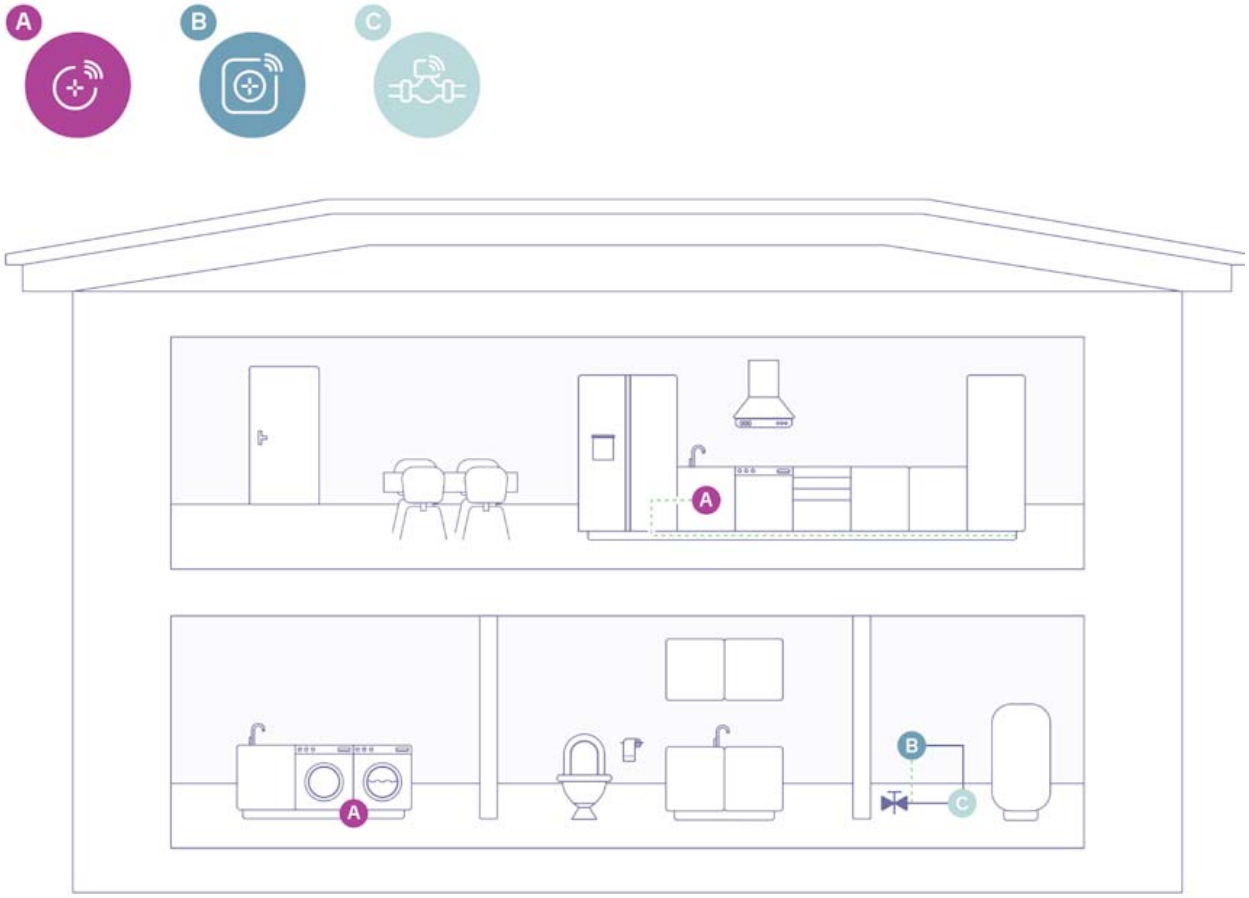

Product	Product image	No. of devices*	Installation notes

A - Wireless Water Sensor + Water Sensor Bracket	Stand- alone sensor (1x) 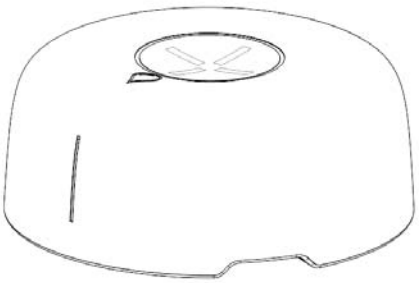 Mounted to bracket with Sensor Tape and external power adapter installed (1x) for additonal water detection range and service-free operation. 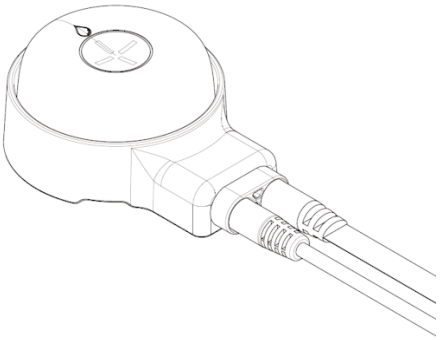	2	Placed in locations that may accumulate water from leakage, e.g. below refrigerator, sink and washing machine.
B - Hub + Sensor Tape (1x)	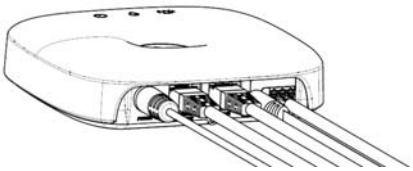	1	Mounted to the wall in a technical room using either - Hub Bracket (standard) - Hub Safety Bracket (when used as a part of an intrusion alarm system) - Hub Docking (when used as a part of an intrusion alarm system and cables are hidden). Sensor Tape w/3.5 mm Jack connected to Hub and fixed to the floor in locations that may accumulate water from leakage (e.g. below water heater).

C - Waterguard valve	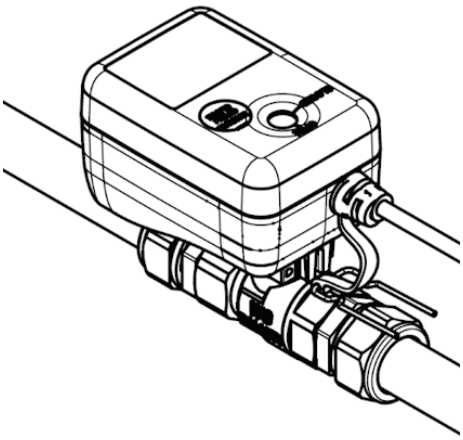	1	Single ball valve installed on main supply into house.

**Number of devices according to specific example installation illustrated*

Kitchen - stand alone installation

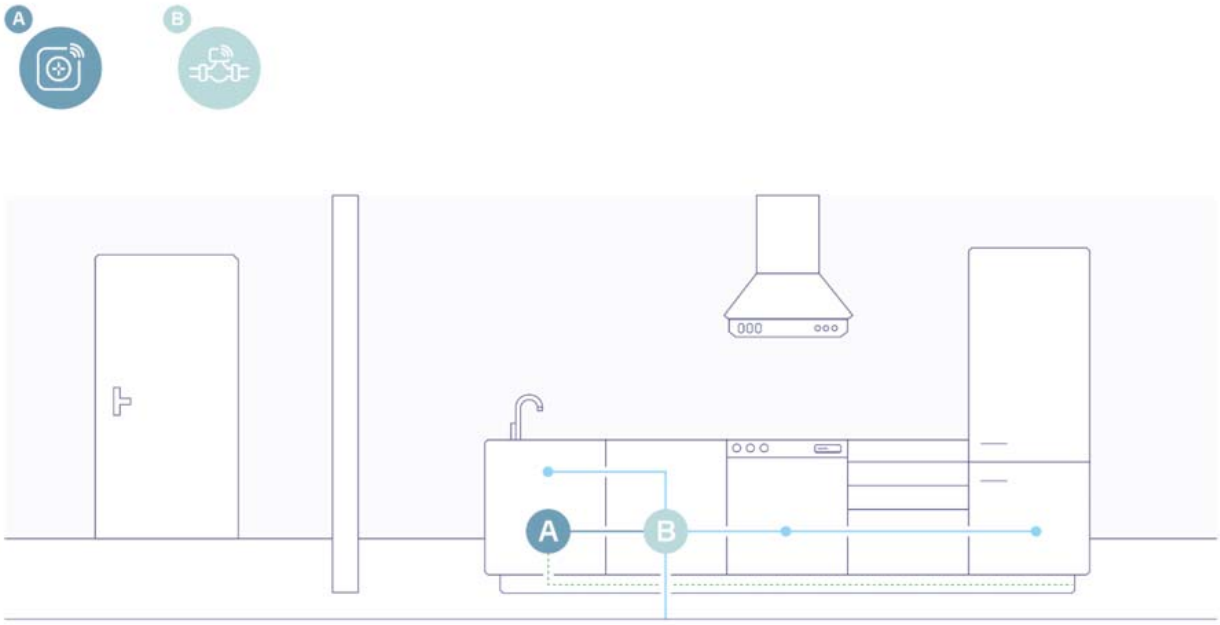

Product	Product image	No. of devices*	Installation notes

A - Hub + Sensor Tape	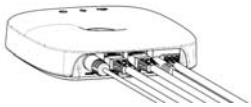	1	Mounted inside the kitchen cabinet using either - Hub Bracket (standard) - Hub Safety Bracket (when used as a part of an intrusion alarm system) Sensor Tape w/3.5 mm Jack connected to Hub and fixed to the floor in locations that may accumulate water from leakage (e.g. below sink and dishwasher).
B - Waterguard valve	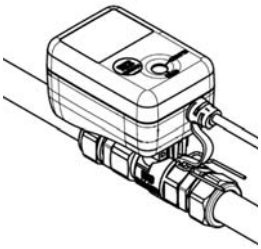	1	One or two valve(s) installed on water supply to kitchen, and/or to specific devices (e.g. coffee machine in office space).

**Number of devices according to specific example installation illustrated*

Buildings with multiple apartments

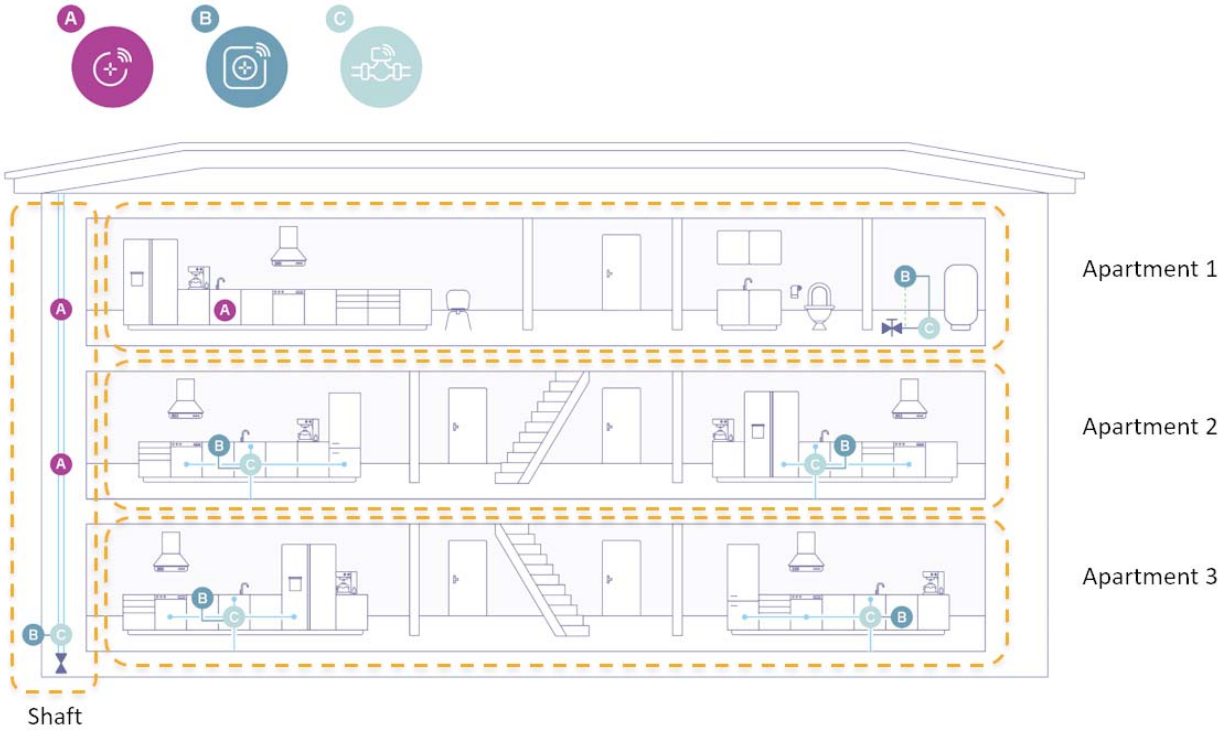

Building shaft

For detailed instructions of shaft installations, see article Building shaft detailed installation instructions

Product	Product image	No. of devices*	Installation notes
B - Hub	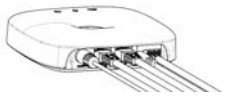	1	Mounted inside shaft using either - Hub Bracket (standard) - Hub Safety Bracket (when used as a part of an intrusion alarm system) - Hub Docking (when used as a part of an intrusion alarm system and cables are hidden).
C - Waterguard valve		1	Two valves installed on the main water supply lines located inside building shaft. water supply to kitchen, and/or to specific devices (e.g. coffee machine in office space).

**Number of devices according to specific example installation illustrated*

Startup and test

System pressure and functionality test

1. Execute § 6.2 **Pressure and tightness control** according to Industry Rules Safe Water Installation according to method “Plastic pipe systems or mixed plastic and metal pipe systems” (**TBD**).
2. Install the Power Adapter into a wall socket (230V) when all components of the system have been properly installed.
3. Test the water shut-off functionality by pressing the center button of the Hub for > 1 second (long press) to OPEN or CLOSE the valve. The OPEN and CLOSE movement takes approximately 6 seconds to complete.
4. Ensure the water supply is completely shut off when the valve is in the CLOSED position by opening up one or more faucets.
5. OPEN the valve and ensure that water flow is restored.

NB! After the system has been tested, thorough training must be provided to the homeowner/user.

Hub pairing and configuration

System configuration without Abra mobile application

1. Follow the installation instructions to properly install and connect your Abra Hub.
2. .Plug Power Adapter into a 230V AC wall socket
3. Allow the Hub to start up. A single beep indicates that the Hub is ready for use.
4. Follow instructions under "Pairing and installation of wireless Water Sensors"

System configuration with Abra mobile application

1. **Setting up the Hub**
   Download and open the Abra mobile application, then follow the on-screen instructions to power up and pair the Hub.

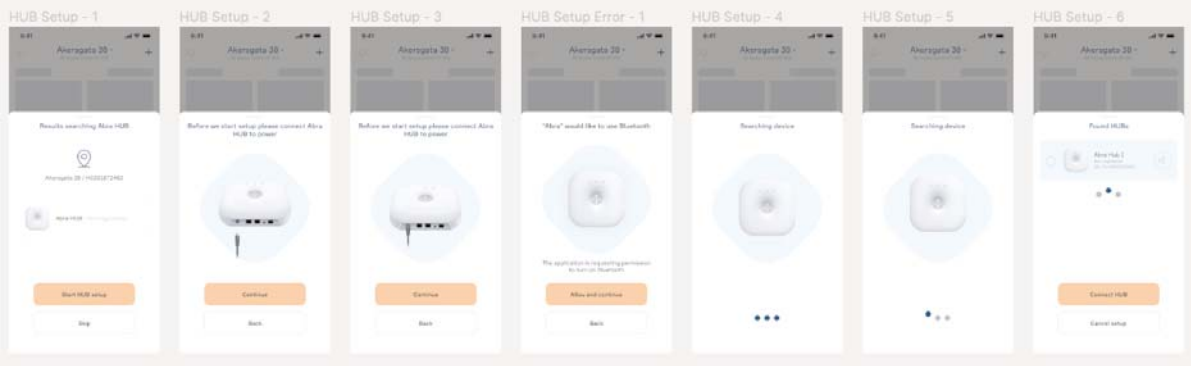

2. **Setting up a network connection (optional)**

   1. Plugin ethernet/internet network cable.

      and/or

   2. Connect the Hub to your local Wifi, by following the on-screen instructions in the mobile application.

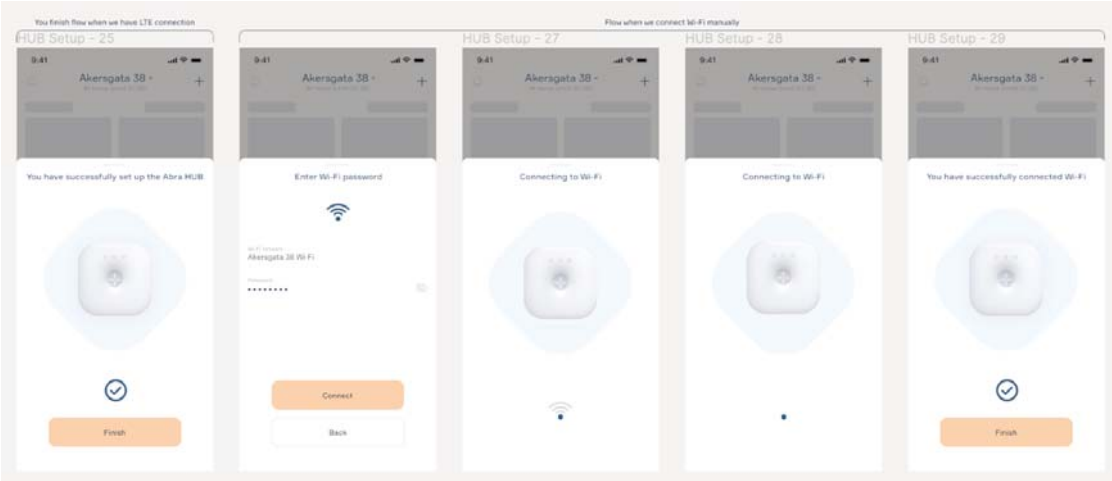

3. **Configuring your home**
   Configure your home by adding information about the size, number of rooms, etc. Register the location of the installed Water Sensors in the Abra mobile application.

Pairing and installation of wireless Water Sensors

The following sequence assumes the Hub is powered by the included 24V power adapter.

1. Press the center button on top of the Hub once (**1x**) to activate pairing mode. The LED status light on the Hub and Water Sensor will pulsate with **BLUE** color.
2. Insert the included CR2477 battery into the Water Sensor and assemble the Battery Cover.
3. Press and hold the center button on the Water Sensor for 2-3 seconds to initiate automatic pairing.
4. When successfully paired, both devices will blink three (**3x**) times with **GREEN** color and provide beeps of the same length as the light sequence.
5. Validate pairing and operation by wetting the Water Sensor probes on the bottom of the Water Sensor. This shall set off an alarm on both the Water Sensor and Hub and close the valve.
6. Silence the alarm by pressing the Hub and Water Sensor button once (1x). OPEN the valve by pressing the Hub center button for > 1 second.
7. Carefully dry the Water Sensor probes to remove any water.
8. Place the Water Sensor in a location on the floor that may accumulate water in case of a leakage, e.g. under the dishwasher, refrigerator, sink, or similar.

Repeat the above steps 1 to 8 for each new Water Sensor.

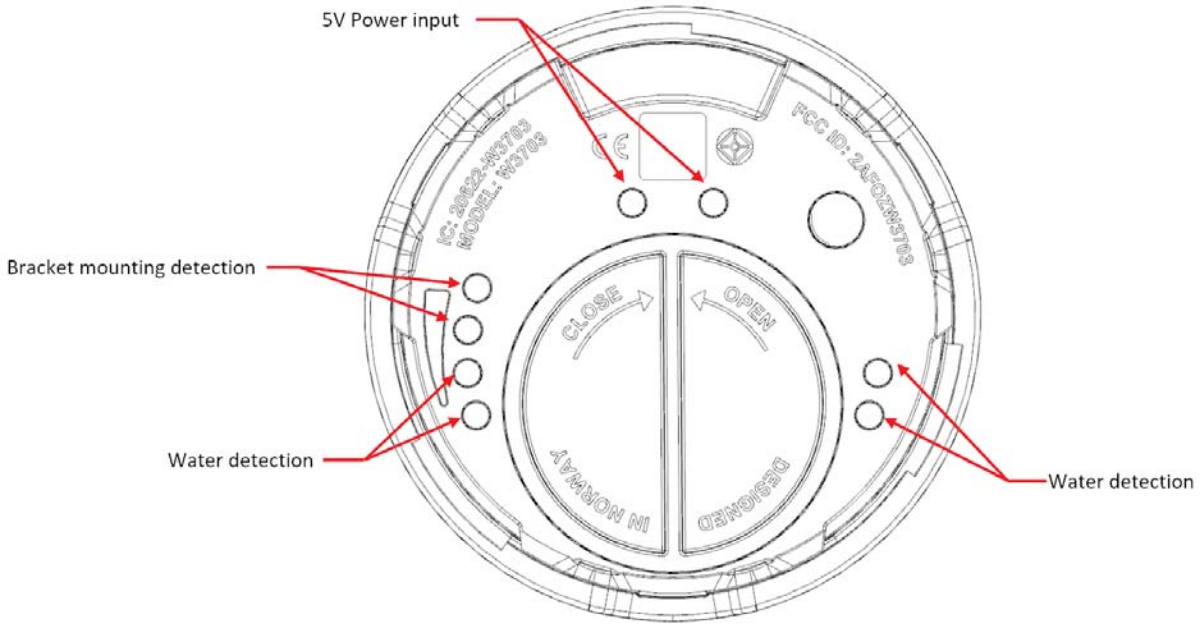

Technical data

Technical specifications - Hub

Number of connected devices	Up to 85
Number of users	Up to 50
Number of individual zones/rooms	Up to 50
Dimensions	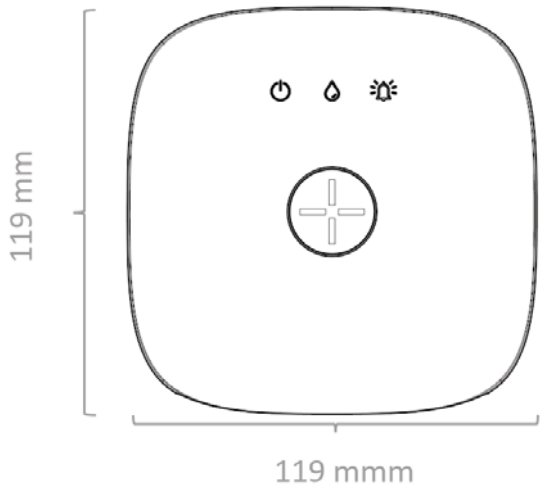
Weight	200 g
Operating temperature range	–10 to 40 °C (14 to 158 °F)
Storage temperature range	-10 to 85 °C (14 to 185 °F)
Operating humidity range	0% - 75 % (short term 95 %) non-condensing
Ingress protection	IP22
Power supply	Wall-mount or wallbox (24V@1A)
Power consumption	20W max.
Built-in back-up battery	Hub Standard: 12 hour backup battery Hub Lite: No.
Energy consumption from the main supply	15 W max.

Radio communication protocols	WiMEA WiFi Zigbee Bluetooth LTE-M (4G) *(Hub Standard only)*
Radio frequency bands	WiMEA: 915MHz FCC (US/CAN) 868MHz RED (EU) WiFi: 2.4GHz Zigbee: 2.4GHz Bluetooth: 2.4GHz LTE-M: 21 dBm (Power Class 5)
RF output power	WiMEA: 10dBm max. WiFi: 19.5dBm max. Zigbee: 5dBm max. Bluetooth: 5dBm max. LTE-M: 21 dBm (Power Class 5)
WiMEA Radio signal range for security devices (open-air)	100 m
Hardware peripherals	Water Sensor (3.5mm Jack) Ethernet (RJ45) Valve controller (RJ45) Modbus (2-wire)

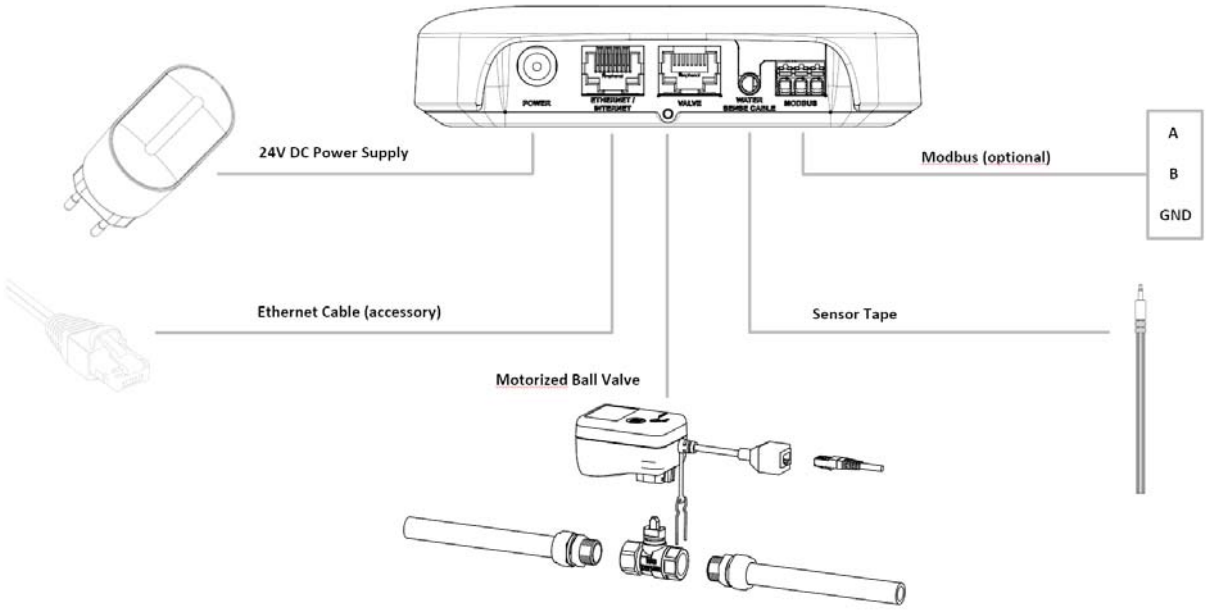

Water Sensor specifications

Dimensions	Diameter: Ø55 mm Height: 22 mm
Weight	50g
Operating temperature range	–10 to 40 °C (14 to 158 °F)
Storage temperature range	-10 to 85 °C (14 to 185 °F)
Operating humidity range	0% - 75 % (short term 95 %) non-condensing
Ingress protection	IP44
Power supply	Coin cell battery (CR2477) or wallbox (12V@0.1A)
Power consumption	0.1 W max.

Radio communication protocols	WiMEA
Radio frequency bands	WiMEA: 915MHz FCC (US/CAN) 868MHz RED (EU) Bluetooth
RF output power	WiMEA: 10dBm max. Bluetooth: 5dBm max.
WiMEA Radio signal range for security devices (open-air)	100 m
Hardware peripherals	• 5V Power input probes • Bracket mounting detection probes • Water detection probes 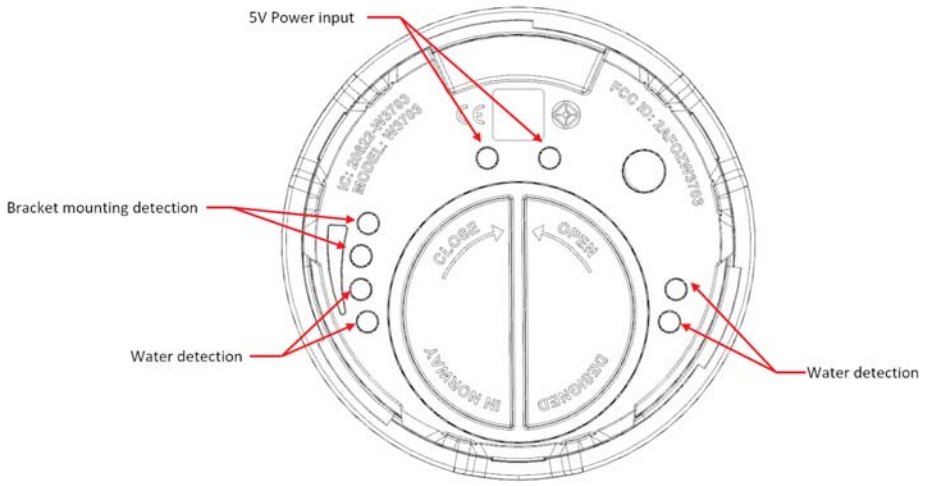
Sensor peripherals	• Water detection - 2 probe pairs • Humidity • Temperature

Certifications and Compliance

Hub	CE/RED
Water Sensor	CE/RED
Valve Actuator	CE

Requirements for the electrical supply and environmental conditions

- The system requires 220-240V AC mains supply
- The Hub and plug-in power adapter are only suitable for indoor use in dry areas.
- The plug-in connectors as well as the Hub connectors must **not** be directly or indirectly sprayed with water when cleaning.

Operating instructions

Water ON/OFF control

To OPEN or CLOSE the water supply, press and hold the button in the center of the Abra Hub for >3 seconds, then release. The Hub will provide a single "BEEP" when initiating OPEN or CLOSE cycle.

LED light in blue color = the valve is OPEN and the water flow is ON

LED light in red color = the valve is CLOSED and the water flow is OFF

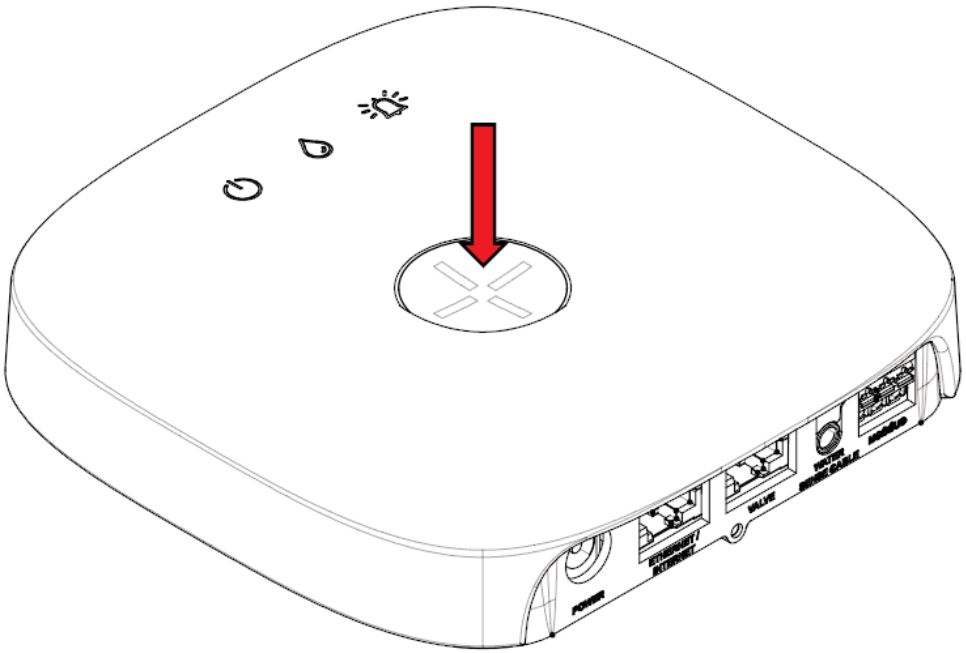

Loss of power

In the event of a power failure, the ball valves (sizes 1/2" and 3/4") that control the water flow will remain in the last position. For magnetic ball valves, consult your owner manual to verify if the valve is Normally Open (NO) or Normally Closed (NC).

Water Sensor low battery warning

When the battery in the wireless Water Sensor is low and needs to be replaced, the system will notify the user on the Water Sensor and in the Abra mobile application.

Tamper or fault detection - Loss of contact with water detection sensor(s)

In the event of loss of contact between the Hub and any installed or paired water detection sensor (Sensor Tape or wireless Water Sensor(s)), the user will be notified on the Hub and in the Abra mobile application.

NOTE: Damage to the Sensor Tape itself is NOT detected, and will not result in a tamper or fault detection.

If the contact to any missing sensors is not restored within **24 hours**, the water supply will shut OFF.

To RESET the water supply, any missing water sensor(s) must be dry and reconnected to the Hub, either physically or by wireless communication.

Consult your Abra mobile application for detailed information and instructions to facilitate a system reset or administration of connected sensors.

Valve exercise

If the valve has not been operated (OPENED or CLOSED) within the last 7 days, the system will exercise the valve by performing a complete OPEN - CLOSED - OPEN cycle.

During operation, the valve unit characteristics are monitored to validate that the valve and valve actuator are working as intended.

Manual testing

The system functionality must be verified by the end-user at least one time (1x) per year, following the step-by-step sequence described in section "System pressure and functionality test".

Alarm reset after water leakage detected

If water leakage is detected by the system and the water supply is CLOSED, follow the below instructions to reset the system.

- Press the center button of the Hub once (**1x**) to silence the alarm.
  NOTE: The audible water alarm signal will be snoozed for 60 minutes. If water is still present after 60 minutes, or a new water leak is detected, the alarm will be re-initiated.
- Fix the source of water leakage and dry out any wet sensors (Sensor tape or wireless Water Sensor).
- Press and hold the center button of the Hub for > 3 seconds to reset the system and OPEN the water supply.

Alarm and water leakage detection override

Press and hold the center button on the Hub for > 10 seconds to override ongoing water alarms and OPEN the water supply.

Please note that the system will NOT close when detecting water leakages when the system is in override mode.

Manual override

In case of emergency or power outage, the water supply may be OPENED or CLOSED using the manual override on the valve.

1. Open the cover marked "MANUAL OPEN / CLOSE" on the top of the actuator.

2. Use a flat or Philips (PH1) type screwdriver, then 1) PUSH DOWN and TURN the screw under the cover. The black line in the sight glass on the ball valve actuator indicates the position of the valve.

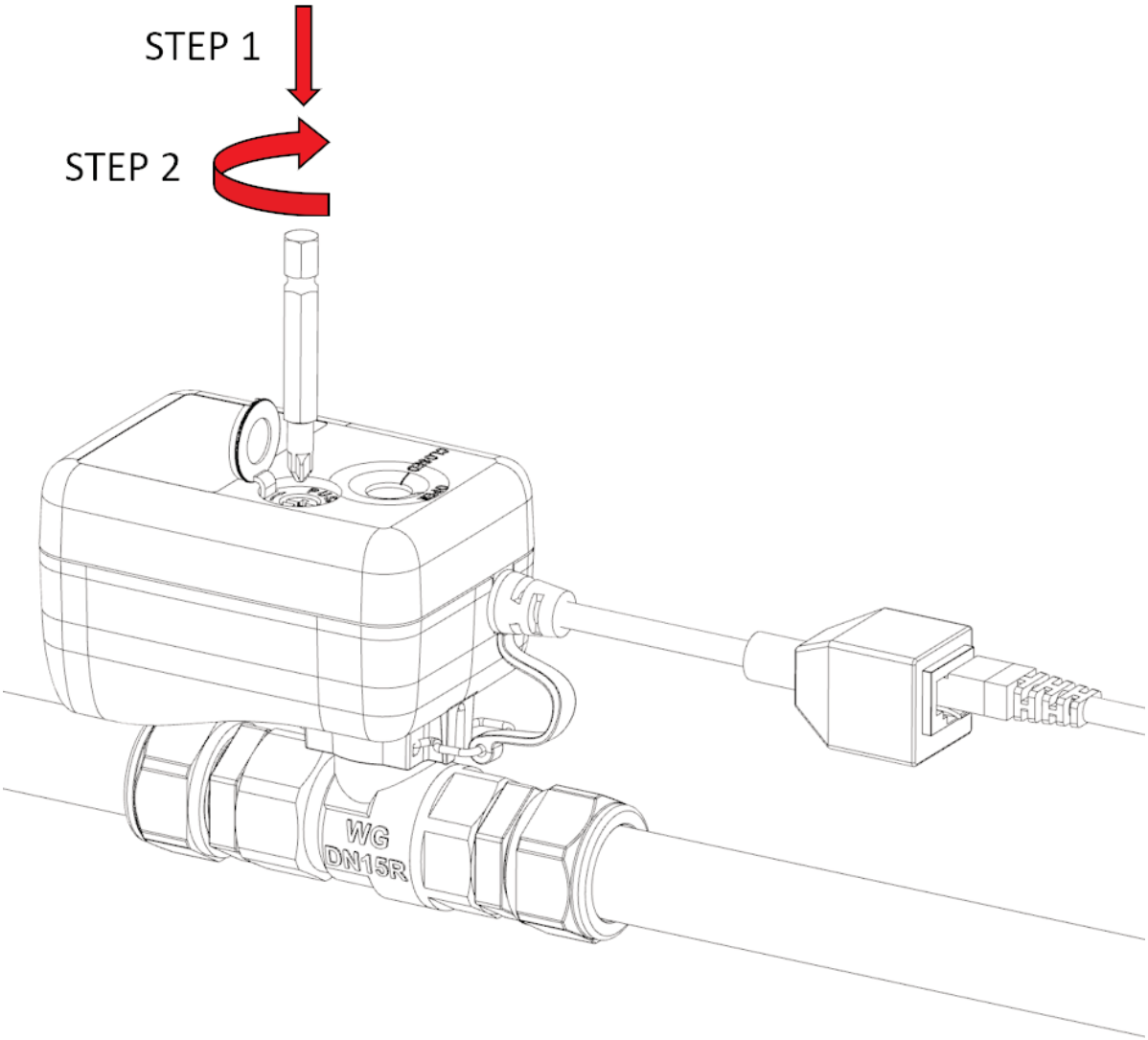

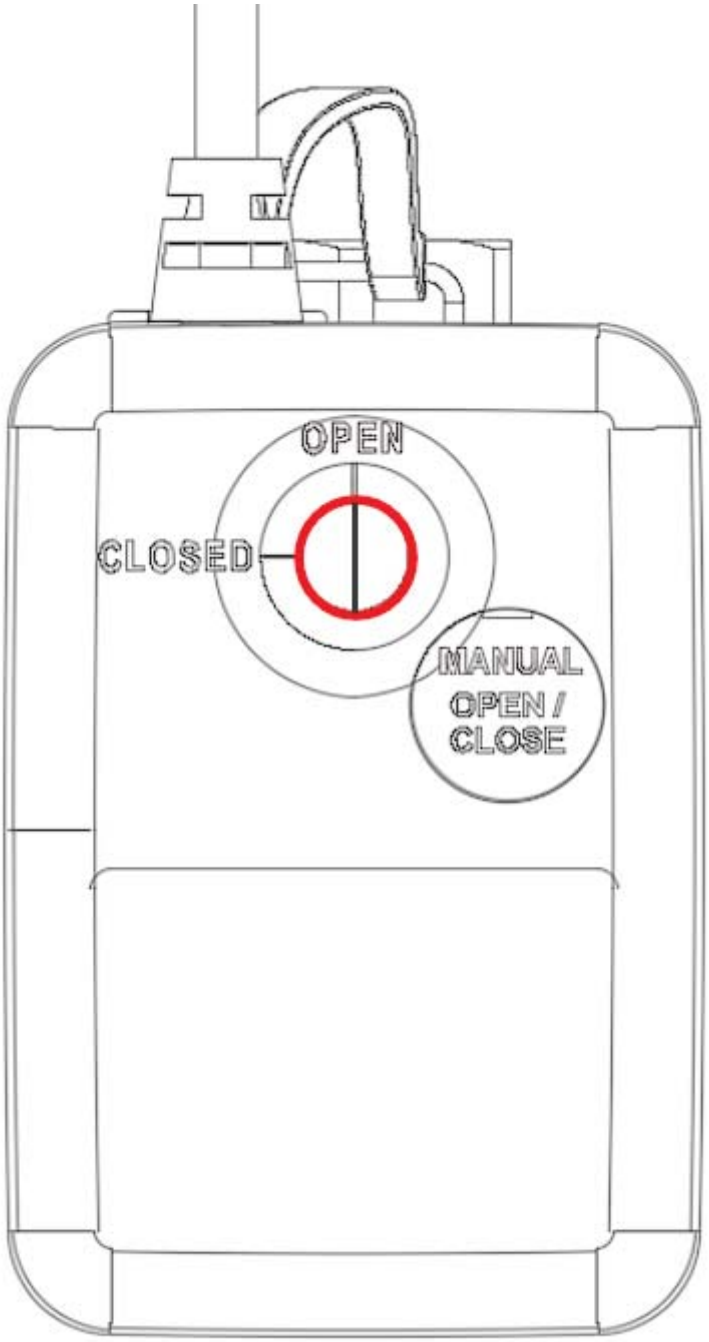

NOTE:

If leakage has been detected before the power failure, the alarm will resume when the power returns.

Change of battery in wireless Water Sensor

The CR2477 coin cell battery provided with the water sensor has a lifetime of >5 years. Batteries should, however, be replaced after a maximum of 5 years. This ensures that the wireless signal range can be guaranteed to meet the minimum distance provided in the product specification.

Sound, light and mobile application notifications will be provided to the user(s) if the battery level is below the recommended limit. Audible and visual signals are provided on both the water sensor and the hub.

Battery installation procedure

1. Remove the battery cover by turning in the counter-clockwise direction (CCW).
2. Remove the battery and insert a new CR2477 coin cell battery.
3. Re-install the battery cover. The status light will turn green for 1 second while at the same time providing a single beep.
4. The Water Sensor will initiate a test alarm. Silence the alarm by pressing the Water Sensor button once (**1x**).

5. IMPORTANT: Test the sensor functionality by wetting a cloth and pressing it towards a pair of sensor probes. This action shall trigger an alarm and CLOSING of the water supply. Carefully dry the sensor.

   Do not apply excessive water to the device when turned upside-down, as the IPx4 water ingress protection is only valid when the sensor is oriented with the probes facing down.

6. Place the water sensor back into the desired location.

STEP 1

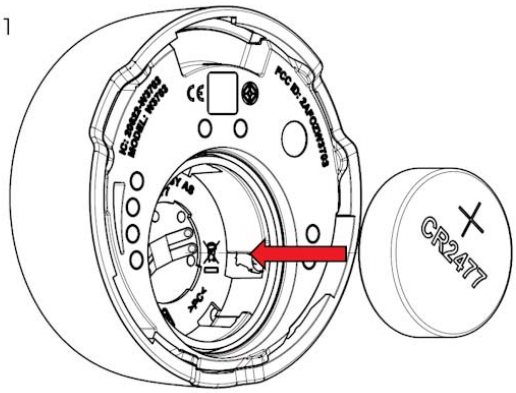

STEP 2

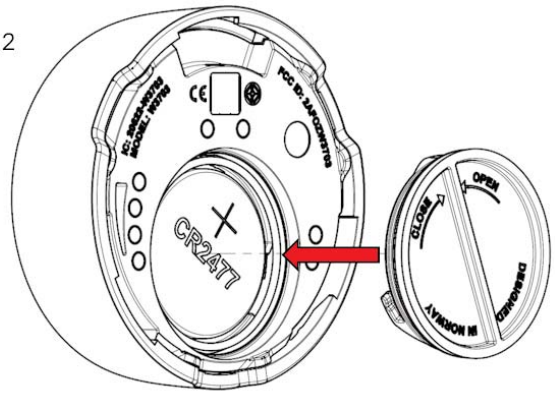

STEP 3

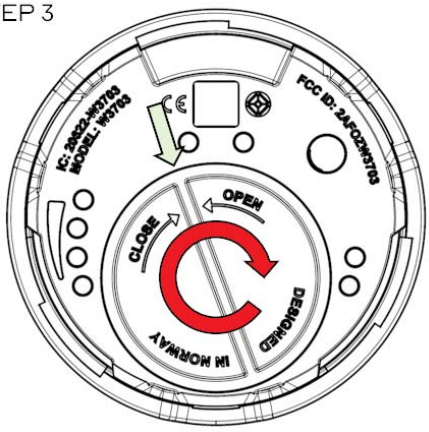

STEP 4

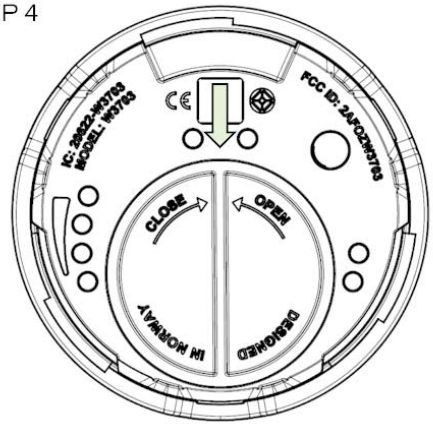

To remove the battery, reverse the below instructions (4 to 1)

Firmware update

The firmware on both the Hub and the Water Sensor will automatically update to the latest version, provided the device is connected to the internet through WiFi or ethernet cable.

Control of the Waterguard system via the Abra mobile application

The Abra mobile application provides a comprehensive interface to control the Waterguard system, among others:

- OPEN or CLOSE the water supply
- See the status of the water supply (OPEN or CLOSED) and connected Water Sensors
- Perform remote system control outside of local WiFi range*
- See the location of water leakage (provided that the Water Sensor location is registered)
- Receive alarm and tamper notifications
- Silence alarms and notifications
- System health monitoring

*By activating your Abra subscription, the water may also be controlled from outside the range of your local WiFi connection.

System boot reset

Press and hold the RESET button on the back of the Hub for > 10 seconds to initiate a hard reset.

A hard reset will delete all settings, devices and preferences.

System modes

- System powered
- Water supply OPEN
- Water supply CLOSED
- Water leakage detected
- Low battery in wireless Water Sensor
- Tamper mode - sensor tape or wireless Water Sensor removed or disconnected

Waterguard signals, alarms, and notifications

Function	Signal Hub	Action

Modes		
System powered (power cable inserted)	Hub **1x** 1-second beep and **GREEN** light in power symbol 	No action required
Water supply is OPEN	Hub Continous, **GREEN** light in water droplet icon. Motorized ball valve Position indicator line pointing towards OPEN	Press and hold Hub center button for > 3 seconds to CLOSE water supply.

	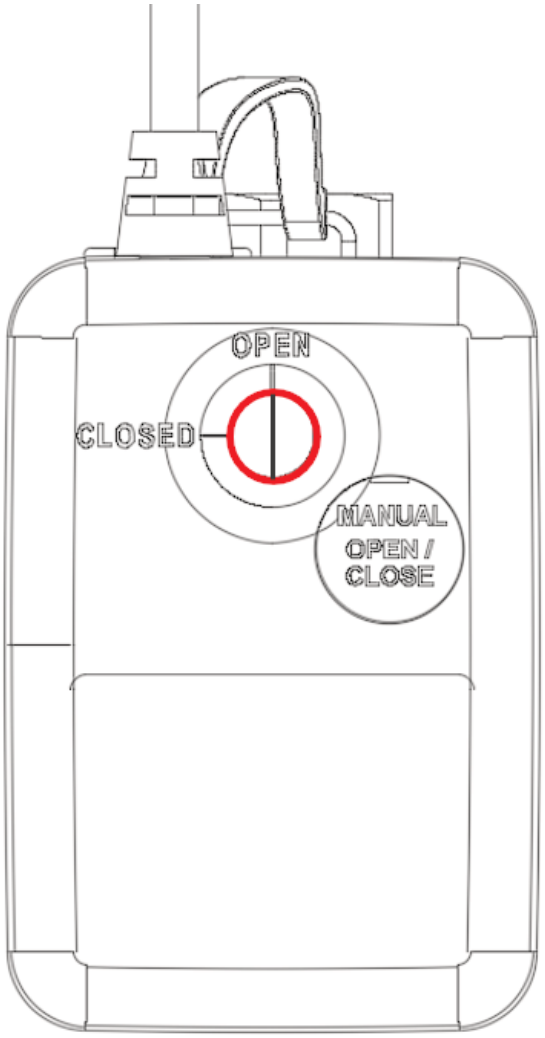	
Water supply is CLOSED	Hub Continous, **RED** light in water droplet.	Press and hold Hub center button for > 3 seconds to OPEN water supply.
Hub override mode **OBS! Water leakage detection disabled**	• Continous, **YELLOW** light on all three indicator lights on Hub • **5x** 1-second beeps (0.5-second pause in between) when entering override mode • **2x** 0.5-second beeps (0.5-second pause in between) every 60 seconds after	Single (**1x**) click on Hub center button to cancel override mode.

Hub pairing mode	Pulsating, **BLUE** light in power symbol. 	Single click (1x) Hub button to enter pairing mode.
Water Sensor pairing mode	Pulsating, **BLUE** light in power symbol. 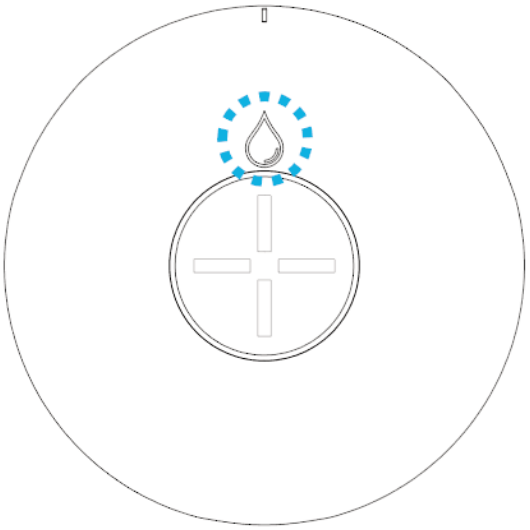	Press and hold Water Sensor button for > 3 seconds to enter pairing mode. 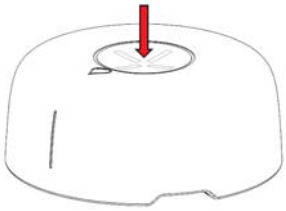
Events		

Device successfully paired to Hub	Hub and device (e.g. Water Sensor) **3x** 1-second beeps and **GREEN** blinking power symbol (0.5-second pause in between) 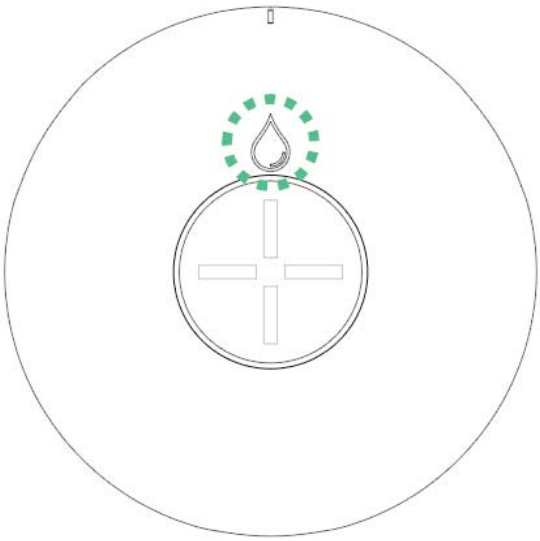	No action required

Device unpairing (remove from Hub)	Device **3x** 1-second beeps and **BLUE** light blinking (0.5-second pause in between)	Press and hold device button for > 5 seconds.
Water detected - alarm active	Hub Pulsating, **RED** light in water droplet icon and 1-second beeps (1 second pause in between). Water Sensor Beep and blinking, **RED** light in water droplet icon every 10 seconds 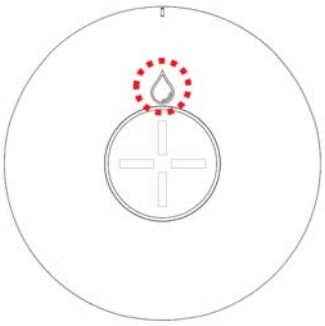	To clear alarm: • Single (**1x**) click on Hub button. • Single (**1x**) click on Water Sensor button.

Water leakage cleared	Hub Sound and light cleared Water Sensor • **3x** 0.5-second beeps • **2x** 0.5-second **GREEN** light blinking (0.5-second pause in between) 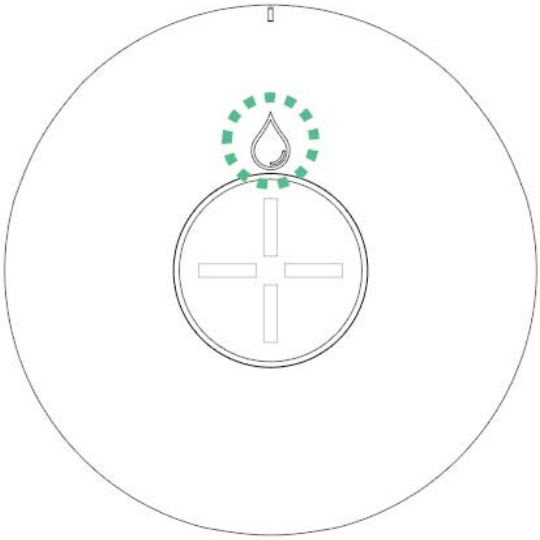	No action required
High/low temperature and frost risk	**TBD**	
Humidity or temperature warning	**TBD**	
Water Sensor low battery warning	Single blink every 5 seconds	Change battery according to instructions in the user manual.

Type approvals

The leak detection and automatic water shut-off functions of the Waterguard system have been tested and verified according to the guidelines for SINTEF Technical Certification - method 4959 (**TBD**).

The system is approved for use with both cold and warm water (60 °C) with a maximum short-term working temperature of 90 °C.

The valves feature a fixed female thread according to ISO-228 and are suitable for use with PEX-pipes as well as copper unions and fittings, chrome-plated, hard, semi-hard, and soft copper pipes.

Requirements for FG-approval for automatic leak stop systems

Follow the instructions and templates provided under FG-regler for automatiske lekkasjestoppere (FG-600:2) to comply with and obtain the Norwegian national FG approval.

For Products Sold in the US/CAN

Changes or modifications to the equipment not expressly approved by the party responsible for compliance could void the user's authority to operate the equipment.

This device complies with Part 15 of the FCC Rules. Operation is subject to the following two conditions: (1) this device may not cause harmful interference, and (2) this device must accept any interference received, including interference that may cause undesired operation.

Note: This equipment has been tested and found to comply with the limits for a Class B digital device, pursuant to part 15 of the FCC Rules. These limits are designed to provide reasonable protection against harmful interference in a residential installation. This equipment generates, uses and can radiate radio frequency energy and, if not installed and used in accordance with the instructions, may cause harmful interference to radio communications. However, there is no guarantee that interference will not occur in a particular installation. If this equipment does cause harmful interference to radio or television reception, which can be determined by turning the equipment off and on, the user is encouraged to try to correct the interference by one or more of the following measures:

• Reorient or relocate the receiving antenna.
• Increase the separation between the equipment and receiver.
• Connect the equipment into an outlet on a circuit different from that to which the receiver is connected.
• Consult the dealer or an experienced radio/TV technician for help.

Waterguard Abra Hub: This device complies with FCC RF radiation exposure limits set forth for an uncontrolled environment. The antenna used for this transmitter must be installed to provide a separation distance of at least 20 cm from all persons and must not

be co-located or operating in conjunction with any other antenna or transmitter. 1st Mate **Waterguard Abra Water Sensor:** This device has been tested and meets applicable limits for radio frequency (RF) exposure.

Déclaration d'exposition aux radiations: Déclaration d'exposition aux radiations: Cet équipement est conforme aux limites d'exposition aux rayonnements IC établies pour un environnement non contrôlé. Cet équipement doit être installé et utilisé avec un minimum de 20 cm de distance entre la source de rayonnement et votre corps.

Radiation Exposure Statement: This equipment complies with IC radiation exposure limits set forth for an uncontrolled environment. This equipment should be installed and operated with minimum distance 20 cm between the radiator and your body.

This device complies with Industry Canada licence-exempt RSS standard(s). Operation is subject to the following two conditions: (1) this device may not cause interference, and (2) this device must accept any interference, including interference that may cause undesired operation of the device.

Le présent appareil est conforme aux CNR d'Industrie Canada applicables aux appareils radio exempts de licence. L'exploitation est autorisée aux deux conditions suivantes: (1) l'appareil ne doit pas produire de brouillage, et (2) l'utilisateur de l'appareil doit accepter tout brouillage radioélectrique subi, même si le brouillage est susceptible d'en compromettre le fonctionnement.

Declaration of Conformity Hereby, Fell Technology AS declares that the radio equipment type W3701 / W3703 is in compliance with directive 2014/53/EU. CE

The declaration of conformity is available at the following internet address:http://XXXXXX.
RF exposure information: The Maximum Permissible Exposure (MPE) level has been calculated based on a distance of d=20 cm between the device and the human body. To maintain compliance with RF exposure requirement, use product that maintain a 20cm distance between the device and human body.