Certification Exhibit

FCC ID: 2AFR8ED0991

FCC Rule Part: Part 15.517

ACS Project Number: 15-3027

Manufacturer: InVue Security
Model: ED0991

Manual

ED0991 Module, Users Manual

Key Features

- The ED0991 is a modular transceiver to meet the requirements of 47 C.F.R. § 15.212
    - (i) The radio elements of the ED0991 have their own shielding.
    - (ii) The ED0991 does not have modulation/data inputs. The modulation is generated internal and the modulation type is fixed as BPM w/ BPSK. The data rates are fixed and set to the module via an SPI interface to the host MCU.
    - (iii) The modular transmitter has its own power supply regulator.
- An IEEE802.15.4-2011 UWB compliant wireless transceiver module based on DecaWave's DW1000 IC.
- Fully coherent receiver for maximum range and accuracy.
- Designed to comply with FCC & ETSI UWB spectral masks
- Supply voltage 2.8V to 3.6V
- SPI Interface to host processor

Key Benefits

- High immunity to multipath fading – allows reliable communications in high fading environments
- Low power consumption allows operation from batteries for long periods*
- Small physical size allows the implementation of cost-effective solutions in RTLS and WSN
- Integrated antenna allows simple product implementation – no RF design required
- Integration of DW1000 IC, antenna, power management and clock control simplifies design integration
- Very precise location of tagged objects delivers enterprise efficiency gains and cost reductions
- Long LOS and NLOS range reduces amount of infrastructure required to deploy systems
- Low power consumption reduces the need to replace batteries and lowers system lifetime costs
- Standards based solution (IEEE802.15.4-2011), eases proliferation
- Low cost allows cost-effective implementation of solutions

The ED0991 module interfaces to an application microcontroller via SPI bus. Physical and MAC layer functionality are accessed via the SPI bus, through addressable registers as well as execution commands. Data received or to be transmitted are also accessed through the SPI bus and are implemented as a FIFO register (64 bytes each for TX and RX). To transmit, a frame of data is placed in the FIFO, this may include a destination address. A transmit command is given, which will transmit the data according to the initial setup of the registers. To receive data a receive command is given, which will listen for a transmission and when one occurs put the received frame in the FIFO. When neither transmit nor receive is required the device can enter either an Idle mode, from which it can quickly re-enter receive or transmit mode or it can enter a low power sleep mode, from which a crystal startup is also required prior to transmit or receive operation.

A block diagram is given for the ED0991 module in Figure 1.

Antenna

The antenna couples energy between the air and the module. The ED0991 module has an integrated antenna that is near omni-directional. Note that the end radiation pattern depend not only on the antenna, but also the ground plane, enclosure and installation environment.

- Matching
  - The matching provides the correct loading of the transmit amplifier to achieve the highest output power as well as the correct loading for the receive LNA to achieve the best sensitivity.
- Physical
  - The physical layer provides conversions between data, symbol and RF signal.
- MAC
  - The MAC layer is part of the Logical Link Layer and provides frame handling, addressing and medium access services.
- Microcontroller Interface
  - The microcontroller interface exposes registers and commands for the physical and MAC layers to a microcontroller.
- Power Management
  - Power management ensures a stable supply for the internal functions as well as providing means for a low power sleep mode, in which most of the transceiver is power off.

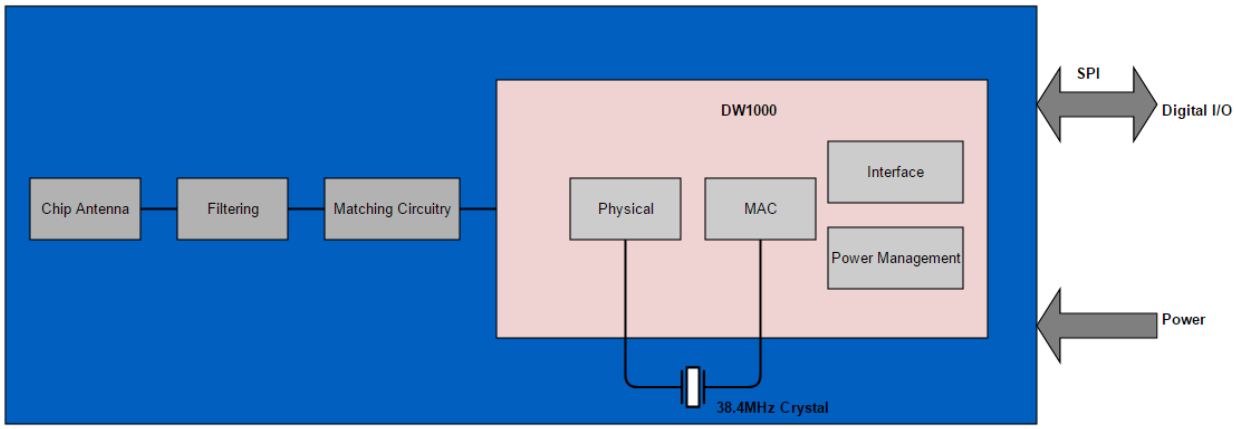

Figure 1

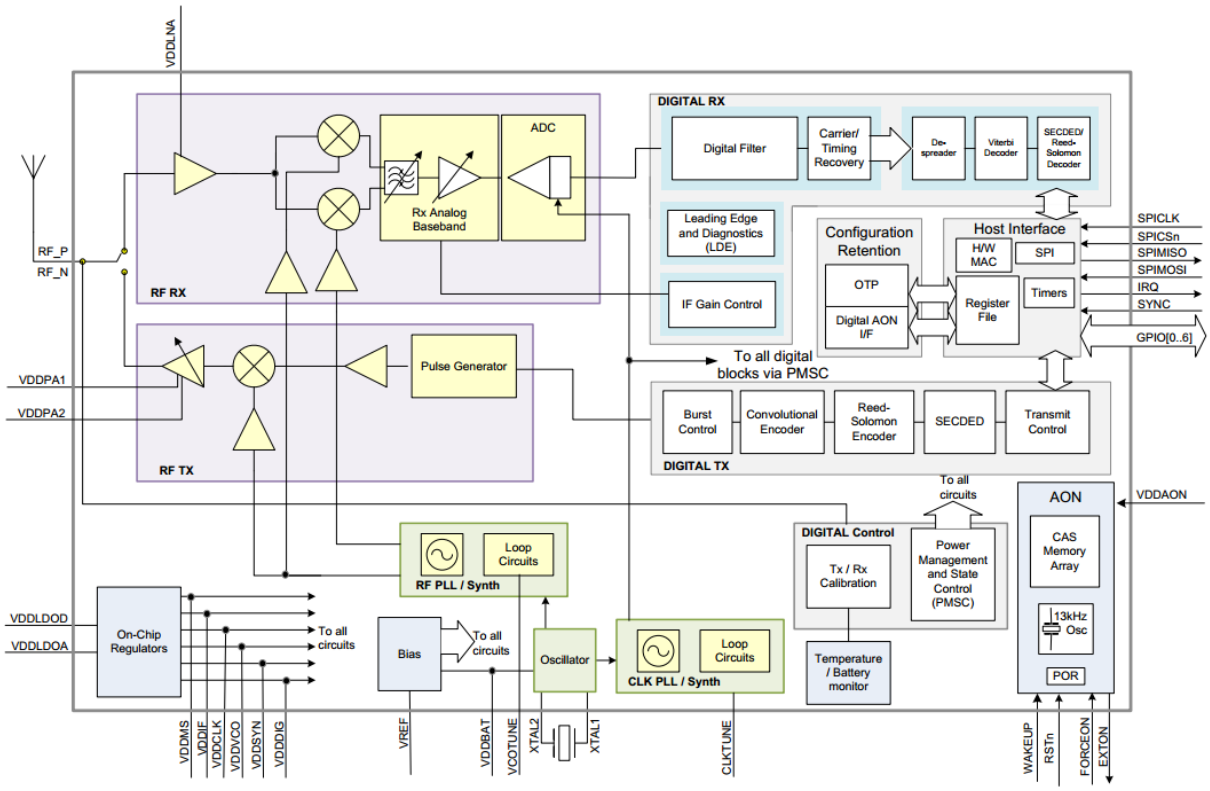

Typical Flow

After initial setup of registers for desired behavior, the normal operation flow diagram is shown in. In applications of infrequent data transmissions the transceiver would be in **SLEEP** mode to save power (<100nA). From there it would be woken up and enter **WAKEUP** mode. As part of the wake up process the crystal oscillator is started (~4ms) and the digital microcontroller interface is powered up. Before transmit or receive the frequency synthesizer needs to be started **RSTn** and having been powered off (or idle for a while) the control loop of the VCO/PLL needs to be calibrated **INIT**. A data frame is loaded into the transmit FIFO and the **TX** mode is entered. In the TX state the DW1000 actively transmits a frame containing the contents of the transmit buffer on the configured RF channel with the configured transmit parameters (PRF, data rate, preamble code etc.) Once the frame transmission is complete the DW1000 may enter one of three modes depending on the programmed configuration. After the frame transmission is complete the DW1000 will return to the **IDLE** state unless the ATXSLP bit is set (in Sub-Register 0x36:04 – PMSC_CTRL1) in which case the DW1000 will enter the **SLEEP** or **DEEPSLEEP** state automatically, (as long as no host interrupts are pending). When transmit is complete **RX** mode is entered to either hunting for preamble or (once it has detected preamble) actively receiving preamble searching for SFD, and subsequently receiving the PHR, decoding it and receiving the data part of the frame. In the RX state, the RF synthesizer and all RX blocks are active. After an event that ends the reception, (either a good frame RX, or some error or timeout event that aborts reception) the DW1000 will return to the IDLE state unless the ARXSLP bit is set (in Sub-Register 0x36:04 – PMSC_CTRL1) in which case the DW1000 will enter the SLEEP or DEEPSLEEP state automatically (as long as no host interrupts are pending).

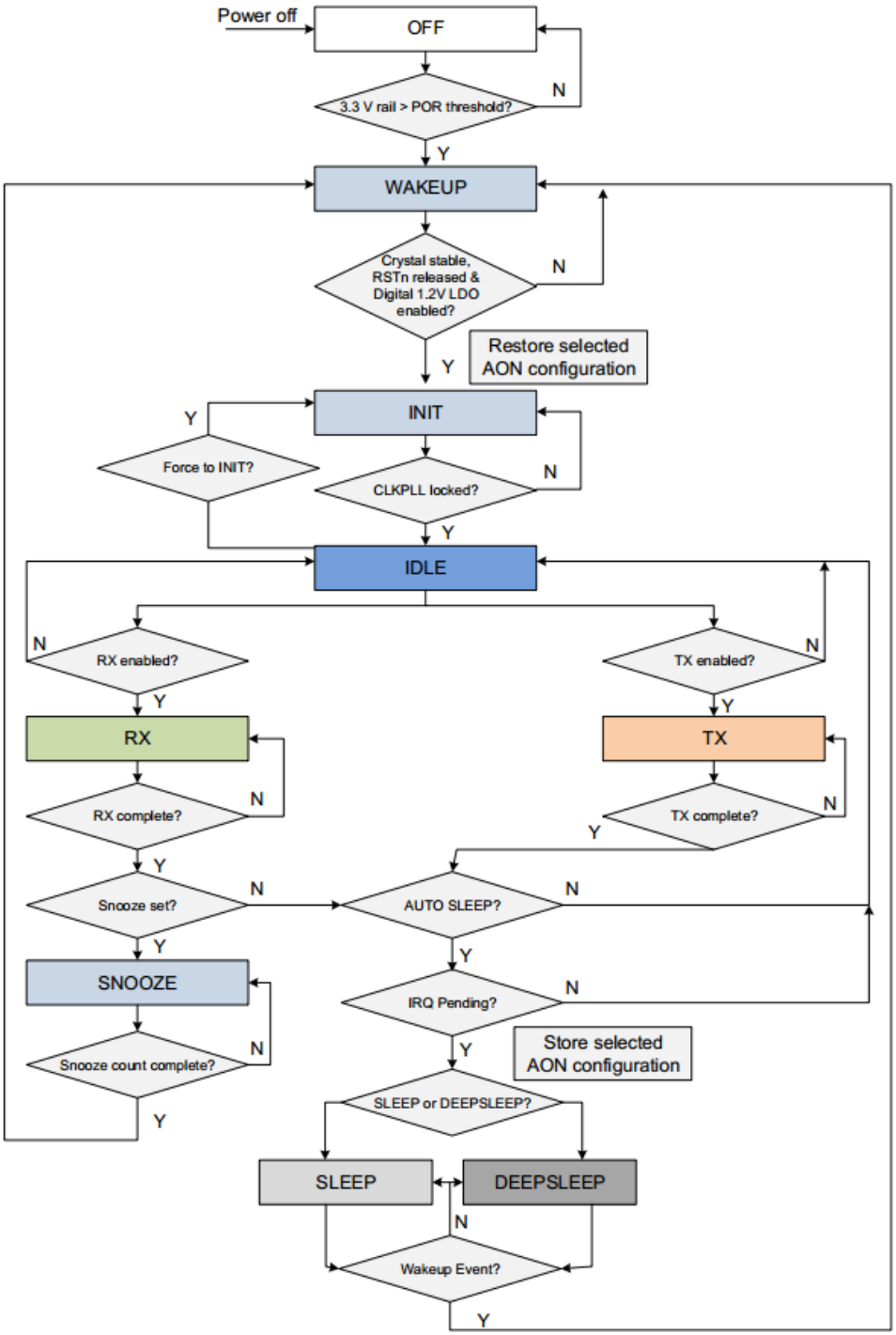
Power off
OFF
3.3 V rail > POR threshold?
N
Y
WAKEUP
Crystal stable, RSTn released & Digital 1.2V LDO enabled?
N
Y
Restore selected AON configuration
INIT
Y
Force to INIT?
CLKPLL locked?
N
Y
IDLE
N
RX enabled?
Y
N
TX enabled?
Y
RX
TX
RX complete?
N
TX complete?
N
Y
Y
Snooze set?
N
AUTO SLEEP?
N
Y
Y
SNOOZE
IRQ Pending?
N
Snooze count complete?
N
Y
Store selected AON configuration
Y
SLEEP or DEEPSLEEP?
SLEEP
DEEPSLEEP
N
Wakeup Event?
Y

Contents

Key Features 1
Key Benefits 1
Antenna 2
1. Overview 5
1.1. ED0991 Functional Description 6
1.2. ED0991 Power Up 6
1.3. SPI Host Interface 7
1.3.1. SPI Signal Timing 7
1.4. GPIO 8
1.5. Always-On Memory (AON) 9
1.6. One Time Programmable Memory 9
1.7. Interrupts and Device Status 9
1.8. MAC 9
1.9. External Synchronization 9
2. ED0991 Pin Connections 9
2.1. Pin Numbering 10
3.1. Nominal Operating Conditions 12
3.2. DC Characteristics 13
3.3. Receiver AC Characteristics 13
3.4. Transmitter AC Characteristics 14
3.5. Temperature and Voltage Monitor 14
3.6. Antenna 14
3.7. Absolute Maximum Ratings 15
4. References 15
5. Regulatory Approvals and Restrictions 15

1. Overview

The ED0991 module is an IEEE 802.15.4-2011 UWB implementation. RF components, Decawave DW1000 UWB transceiver, and other components reside on-module. ED0991 enables cost effective and reduced complexity integration of UWB communications and ranging features, greatly accelerating design implementation.

1.1. ED0991 Functional Description

The ED0991 on board the ED0991 is a fully integrated low-power, single chip CMOS RF transceiver IC compliant with the IEEE 802.15.4-2011 [1] UWB standard.

The module contains an on-board 38.4 MHz reference crystal. The crystal has been trimmed in production to reduce the initial frequency error to approximately 2 ppm, using the DW1000 IC's internal on-chip crystal trimming circuit, see section 2.1.1.

Always-On (AON) memory can be used to retain ED0991 configuration data during the lowest power operational states when the on-chip voltage regulators are disabled. This data is uploaded and downloaded automatically. Use of ED0991 AON memory is configurable.

The on-chip voltage and temperature monitors allow the host to read the voltage on the VDDAON pin and the internal die temperature information from the DW1000.

See the DW1000 Datasheet [2] for more detailed information on device functionality, electrical specifications and typical performance.

1.2. ED0991 Power Up

Figure 2:ED0991 Power up sequence

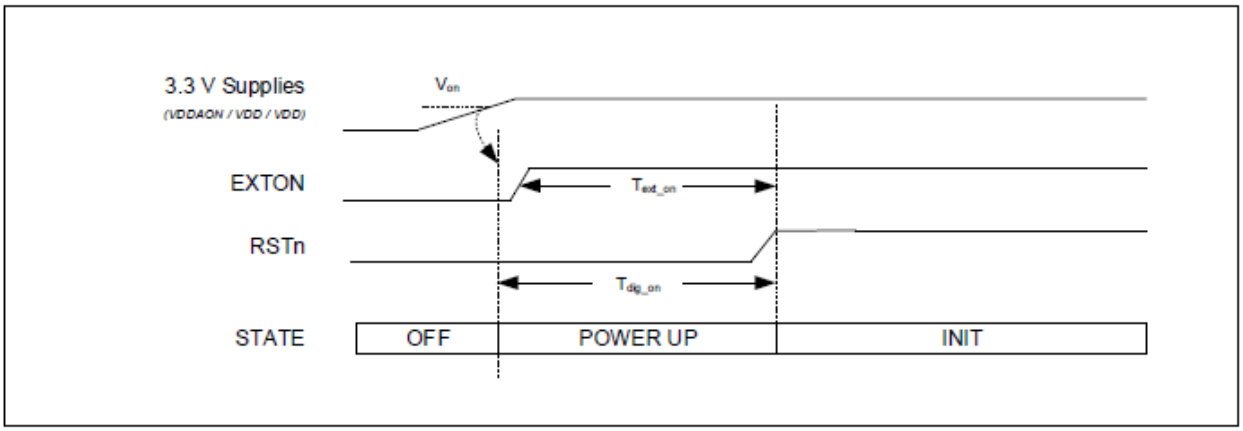

When power is applied to the ED0991, RSTn is driven low by internal circuitry as part of its power up sequence. See Figure 2 above. RSTn remains low until the on-module crystal oscillator has powered up and its output is suitable for use by the rest of the device, at which time RSTn is deasserted high.

Table 1: ED0991 Power up Timing

Parameter	Description	Nominal Value	Units
V_{ON}	Voltage threshold to enable power up	2.0	V
T_{EXT_ON}	Time at which EXTON goes high before RSTn is released	3	msec
T_{DIG_ON}	RSTn held low by internal reset circuit / driven low by external reset circuit	3	msec

RSTn may be used as an output to reset external circuitry as part of system bring-up as power is applied.

An external circuit can reset the ED0991 by asserting RSTn for a minimum of 10 ns. RSTn is an asynchronous input. ED0991 initialization will proceed when the pin is released to high impedance. RSTn should never be driven high by an external source.

Please see DW1000 Datasheet [2] for more details of DW1000 power up.

1.3. SPI Host Interface

The DW1000 host communications interface is a slave-only SPI. Both clock polarities (SPIPOL=0/1) and phases (SPIPHA=0/1) are supported. The data transfer protocol supports single and multiple byte read/writes accesses. All bytes are transferred MSB first and LSB last. A transfer is initiated by asserting SPICSn low and terminated when SPICSn is deasserted high.

See the DW1000 Datasheet [2] for full details of the SPI interface operation and mode configuration for clock phase and polarity.

Figure 3 ED0991 SPIPHA=0 TRANSFER PROTOCOL

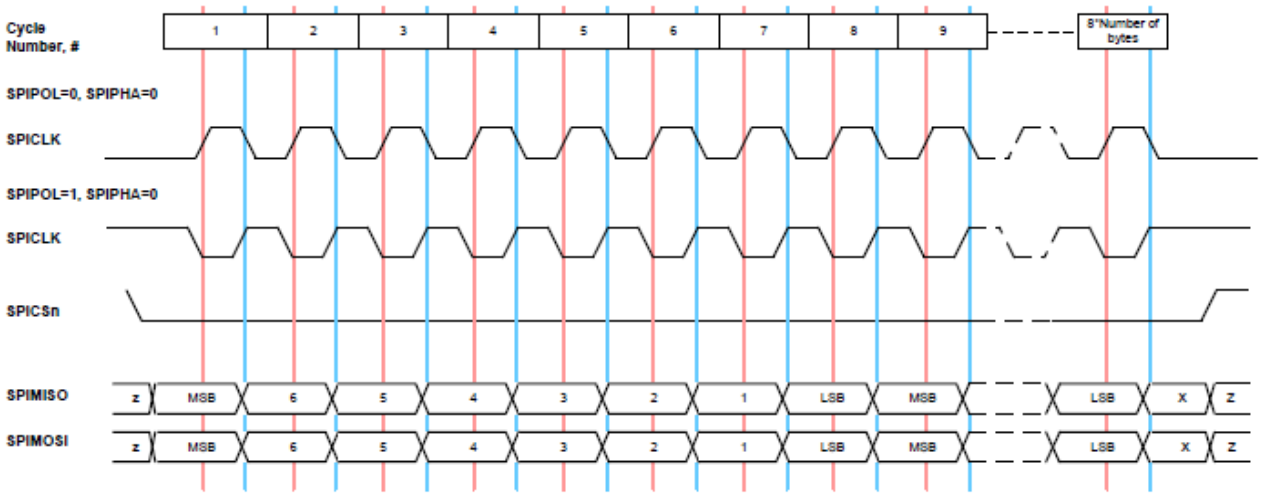

1.3.1. SPI Signal Timing

Figure 4 ED0991 Timing Diagram

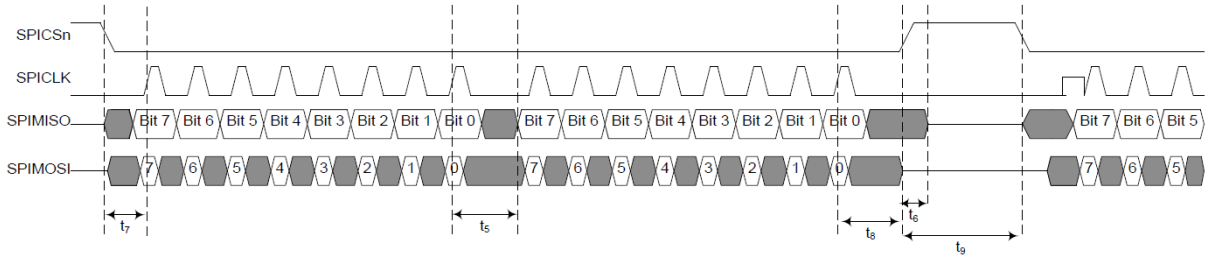

Figure 5 ED0991 SPI Detailed Timing Diagram

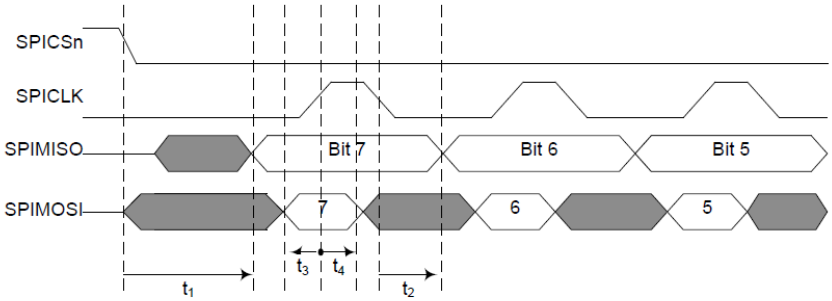

Parameter	Min	Typ	Max	Unit	Description
SPICLK Period	50			ns	The maximum SPI frequency is 20 MHz when the CLKPLL is locked, otherwise the maximum SPI frequency is 3 MHz.
t_1			38	ns	SPICSn select asserted low to valid slave output data
t_2	12			ns	SPICLK low to valid slave output data
t_3	10			ns	Master data setup time
t_4	10			ns	Master data hold time
t_5	32			ns	LSB last byte to MSB next byte

Parameter	Min	Typ	Max	Unit	Description
t_6			10	ns	SPICSn de-asserted high to SPIMISO tri-state
t_7	16			ns	Start time; time from select asserted to first SPICLK
t_8	40			ns	Idle time between consecutive accesses
t_9	40			ns	Last SPICLK to SPICSn de-asserted

1.4. GPIO

The ED0991 provides 8 configurable pins.

On reset, all GPIO pins default to input. GPIO inputs, when appropriately configured, are capable of generating interrupts to the host processor via the IRQ signal.

GPIO0, 1, 2, & 3, as one of their optional functions, can drive LEDs to indicate the status of various chip operations. Any GPIO line being used to drive an LED in this way should be connected as shown. GPIO5 & 6 are used to configure the operating mode of the SPI as described in the DW1000 Datasheet [2].

See DW1000 Datasheet [2] and DW1000 User Manual [3] provide full details of the configuration and use of the GPIO lines.

1.5. Always-On Memory (AON)

Configuration retention in lowest power states is enabled in ED0991 by provision of an Always-On (AON) memory array with a separate power supply, VDDAON. The ED0991 may be configured to upload its configuration to AON before entering a low-power state and to download the configuration when waking up from the low –power state.

1.6. One Time Programmable Memory

The ED0991 contains a 56x32 -bit user programmable OTP memory on the DW1000 device that is used to store per chip calibration information.

1.7. Interrupts and Device Status

ED0991 has a number of interrupt events that can be configured to drive the IRQ output pin. The default IRQ pin polarity is active high. A number of status registers are provided in the system to monitor and report data of interest. See DW1000 User Manual [3] for a full description of system interrupts and their configuration and of status registers.

1.8. MAC

A number of MAC features are implemented including CRC generation, CRC checking and receive frame filtering. See the DW1000 Datasheet [2] and DW1000 User Manual [3] for full details

1.9. External Synchronization

The DW1000 provides a SYNC input. This allows: -

- Synchronization of multiple DW1000 timestamps
- Transmission synchronous to an external reference
- Receive time stamping synchronous to an external counter

See the DW1000 Datasheet [2] and DW1000 User Manual [3] for full details.

2. ED0991 Pin Connections

2.1. Pin Numbering

ED0991 module pin assignments are as follows (viewed from top): -

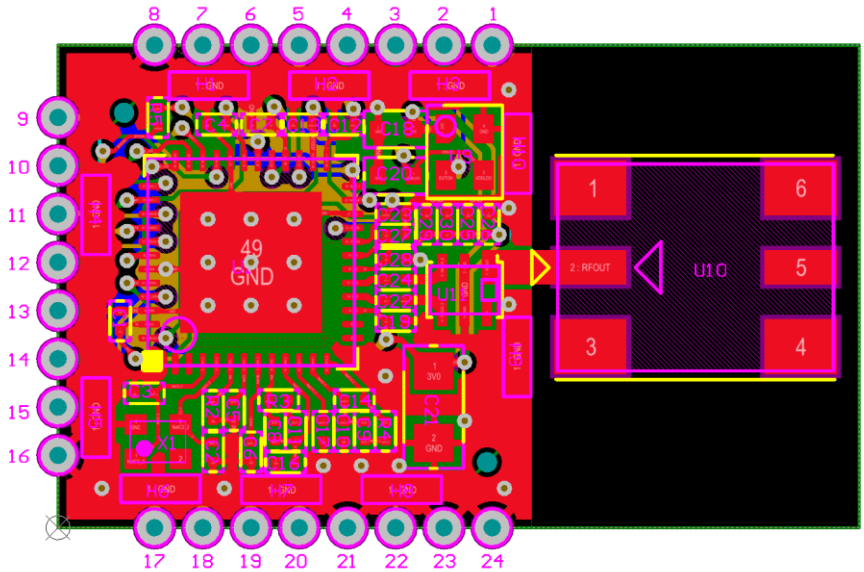

Table 2 ED0991 Pin Functions

Signal Name	PIN	I/O (Default)	Description
EXTON	1	O (O-L)	External device enable. Asserted during wake up process and held active until device enters sleep mode. Can be used to control external DC-DC converters or other circuits that are not required when the device is in sleep mode so as to minimize power consumption. Refer to DW1000 Datasheet for more details [2].
WAKEUP	2	IO	When asserted into its active high state, the WAKEUP pin brings the DW1000 out of SLEEP or DEEPSLEEP states into operational mode.
RSTn	3	IO(O-H)	Reset pin. Active Low Output. May be pulled low by external open drain driver to reset the DW1000. Refer to DW1000 Datasheet for more details [2].
SYNC / GPIO7	4	IO(I)	The SYNC input pin is used for external synchronization (Refer to DW1000 Datasheet for more details [2]). When the SYNC input functionality is not being used this pin may be reconfigured as a general purpose I/O pin, GPIO7

Table 3 ED0991 Pin Functions Continued

Signal Name	PIN	I/O (Default)	Description

VDDA/ON	5	P	External supply for the Always-On (AON) portion of the chip.
VDD	6,7	P	+3.3VDC supply pins
GND	8,16,21, 23,24	G	Common ground
GPIO6 / SPIPOL	9	IO(I)	General purpose I/O pin. On power-up it acts as the SPIPOL (SPI polarity selection) pin for configuring the SPI operation mode. Refer to Section 4.2.2 and the DW1000 Datasheet for more details [2]. After power-up, the pin will default to a General Purpose I/O pin.
GPIO5 / SPIPHA	10	IO(I)	General purpose I/O pin. On power-up it acts as the SPIPHA (SPI phase selection) pin for configuring the SPI mode of operation. Refer to Section 4.2.2 and the DW1000 Datasheet for more details [2]. After power-up, the pin will default to a General Purpose I/O pin.
GPIO4	11	IO(I)	General purpose I/O pin.
GPIO3 / TXLED	12	IO(I)	General purpose I/O pin. It may be configured for use as a TXLED driving pin that can be used to light a LED following a transmission. Refer to the DW1000 User Manual [2] for details of LED use.
GPIO2 / RXLED	13	IO(I)	General purpose I/O pin. It may be configured for use as a RXLED driving pin that can be used to light a LED during receive mode. Refer to the DW1000 User Manual [2] for details of LED use.
GPIO1 / SFDLED	14	IO(I)	General purpose I/O pin. It may be configured for use as a SFDLED driving pin that can be used to light a LED when SFD (Start Frame Delimiter) is found by the receiver. Refer to the DW1000 User Manual [2] for details of LED use.
GPIO0 / RXOKLED	15	IO(I)	General purpose I/O pin. It may be configured for use as a RXOKLED driving pin that can be used to light a LED on reception of a good frame. Refer to the DW1000 User Manual [2] for details of LED use.
SPICSn	17	I	SPI chip select. This is an active low enable input. The high-to-low transition on SPICSn signals the start of a new SPI transaction. SPICSn can also act as a wake-up signal to bring DW1000 out of either SLEEP or DEEPSLEEP states Refer to DW1000 Datasheet for more details [2].
SPIMOSI	18	I	SPI data input. Refer to DW1000 Datasheet for more details [2].

Table 4 ED0991 Pin Functions Continued

Signal Name	PIN	I/O (Default)	Description
SPIMISO	19	O(O-L)	SPI data output. Refer to DW1000 Datasheet for more details [2].
SPICLK	20	I	SPI clock
GNDIRQ / GPIO8	22	IO(O-L)	Common ground
GPIO6 / SPIPOL	9	IO(I)	Interrupt Request output from the ED0991 to the host processor. By default IRQ is an active-high output but may be configured to be active low if required. For correct operation in SLEEP and DEEPSLEEP modes it should be configured for active high operation. This pin will float in SLEEP and DEEPSLEEP states and may cause spurious interrupts unless pulled low. When the IRQ functionality is not being used the pin may be reconfigured as a general purpose I/O line, GPIO8.

Table 5 Explanation of abbreviations

Abbreviation	Description
I	Input
I/O	Input/output
O	Output
G	Ground
P	Power Supply
PD	Power Decoupling
O-L	Defaults to output, low level after reset
O-H	Defaults to output, high level after reset
(I)	Defaults to input
Note: Any signal with the suffix 'n' indicates an active low signal.	

3.1. Nominal Operating Conditions

Table 6 Normal Operating Conditions

Parameter	Min	Typ	Max	Units	Condition/Notes
Operating temperature	-40		+85	°C	
Supply voltage VDDAON, VDD	2.8	3.3	3.6	V	

Note: Unit operation is guaranteed by design when operating within these ranges

3.2. DC Characteristics

Tamb = 25 ˚C, all supplies centered on typical values

Table 7 DC Characteristics

Parameter	Min	Typ	Max	Units	Condition/Notes
Supply current DEEP SLEEP mode		200		nA	Total current drawn from all supplies.
Supply current SLEEP mode		550		nA	
Supply current IDLE mode		13.4		mA	
Supply current INIT mode		3.5		mA	
TX : 3.3 V supplies (VDDAON, VDD)				mA	
RX : 3.3 V supplies (VDDAON, VDD)				mA	
Digital input voltage high				V	
Digital input voltage low				V	
Digital output voltage high				V	Assumes 500 Ω load
Digital output voltage low				V	
Digital Output Drive Current GPIOx, IRQ SPIMISO EXTON	 4 8 3	 6 10 4		mA	

Note: Unit operation is guaranteed by design when operating within these ranges

3.3. Receiver AC Characteristics

Tamb = 25 ˚C, all supplies centered on typical values

Table 8 Receiver Characteristics

Parameter	Min	Typ	Max	Units	Condition/Notes
Frequency range	3244	3993.6	6999	MHz	Must be set to 3993.6MHz to comply with FCC/ETSI certification.
Channel Bandwidth		500		MHz	Must be set to Channel 2 only to comply with FCC/ETSI certification.
In-Band Blocking Level		30		dBc	Continuous Wave Interferer
Out-of--Band Blocking Level		55		dBc	Continuous Wave Interferer

3.4. Transmitter AC Characteristics

Tamb = 25 ˚C, all supplies centered on typical values

Table 9 Transmitter AC Characteristics

Parameter	Min	Typ	Max	Units	Condition/Notes
Frequency range	3244	3993.6	6999	MHz	Must be set to 3993.6MHz to comply with FCC/ETSI certification.
Channel Bandwidth		500		MHz	See DW1000 Datasheet [2]
Power Level Range		24	37	dB	Must be set to 24dB to comply with FCC/ETSI certification.
Coarse Power Level Step		3		dB	
Fine Power Level Step		0.5		dB	
Output power variation with temperature		0.05		dB/°C	
Output power variation with voltage		2.73		dB/V	Channel 2

3.5. Temperature and Voltage Monitor

Tamb = 25 ˚C, all supplies centered on typical values

Table 10 Temperature and Voltage Monitor

Parameter	Min	Typ	Max	Units	Condition/Notes
Voltage Monitor Range	2.4		3.75	V	
Voltage Monitor Precision		20		mV	
Voltage Monitor Accuracy		140		mV	
Temperature Monitor Range	-40		+100	°C	
Temperature Monitor Precision		0.9		°C	

3.6. Antenna

The antenna used in the module is the Partron dielectric chip antenna, part number ACS5200HFAUWB, see [4] for full detail

3.7. Absolute Maximum Ratings

Table 11 Absolute Maximum Ratings

Parameter	Min	Max	Units
Voltage VDD/VDDAON	-0.3	4	V
Receive Power		0	dBm
Temperature – Storage	-40	+85	°C
Temperature – Operating	0	+40	°C
ESD (HBM)		2000	V

Stresses beyond those listed in this table may cause permanent damage to the device. This is a stress rating only; functional operation of the device at these or any other conditions beyond those indicated in the operating conditions of the specification is not implied. Exposure to the absolute maximum rating conditions for extended periods may affect device reliability.

4. References

[1] IEEE802.15.4-2011 or "IEEE Std 802.15.4™-2011" (Revision of IEEE Std 802.15.4-2006). IEEE Standard for Local and metropolitan area networks - Part 15.4: Low-Rate Wireless Personal Area Networks (LR-WPANs). IEEE Computer Society Sponsored by the LAN/MAN Standards Committee. Available from http://standards.ieee.org/

[2] Decawave DW1000 Datasheet www.decawave.com

[3] Decawave DW1000 User Manual www.decawave.com

[4] Partron Dielectric Chip Antenna, P/N ACS5200HFAUWB, www.partron.co.kr

5. Regulatory Approvals and Restrictions

The ED0991, as supplied from Invue Inc. and used only by Invue Inc. The module has been certified for use in the United States and the European Union by the appropriate regulatory body governing radio emissions in that region.

This equipment may only be operated indoors. Operation outdoors is in violation of 47 U.S.C. 301 and could subject the operator to serious legal penalties.

The ED0991 module is based on DecaWave's DW1000 Ultra Wideband (UWB) transceiver IC. It contains an integrated antenna, all RF circuitry, power management and clock circuitry in one module. All components with the exception of the antenna are contained in a Steel Plated Tin shield with a thickness of 0.2mm. It can be used in 2-way ranging or TDOA location systems to locate assets to a precision of 10 cm.

Wireless AP
Base & Sensor

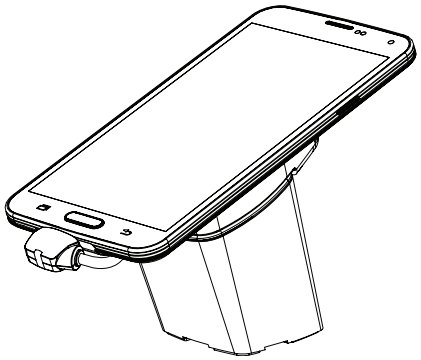

1. Wipe fixture with alcohol wipe provided. **Let it dry completely. Optional: Drill a 22mm hole in fixture.**

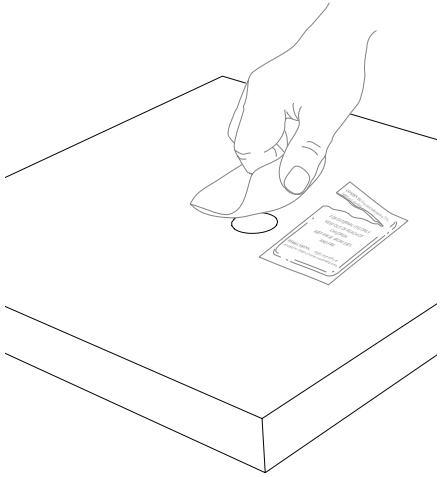

2. Remove film from all 3 adhesives on bottom of base and slide base cord through fixture. **Optional: Run cord through back of stand along fixture.**

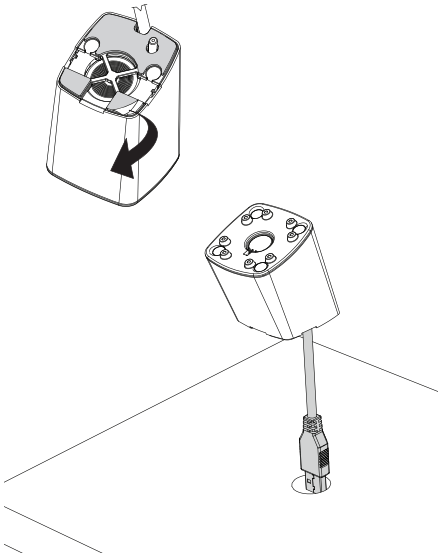

3. Firmly press base onto fixture for 10 seconds. Plug power supply into base cord and outlet.

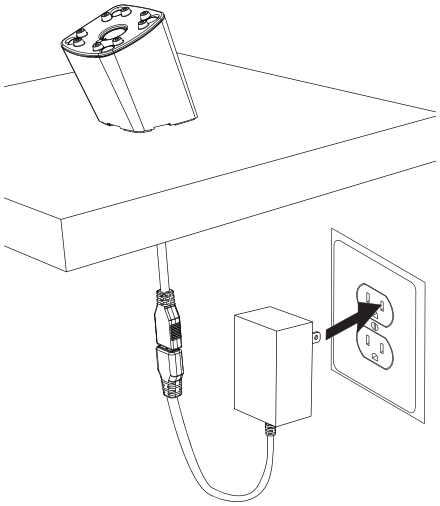

4. Place IR2 key onto IR lens on base and press button on IR2 key once to transfer code into base.

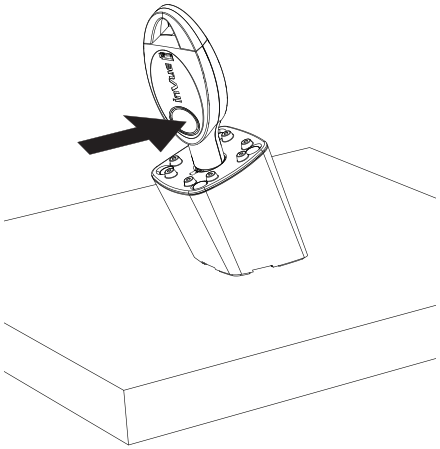

5. Wipe back of merchandise with alcohol wipe provided. **Let it dry completely.**

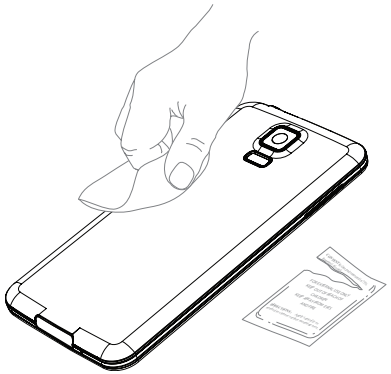

6. Plug power connector into merchandise and remove clear film from adhesive on sensor.

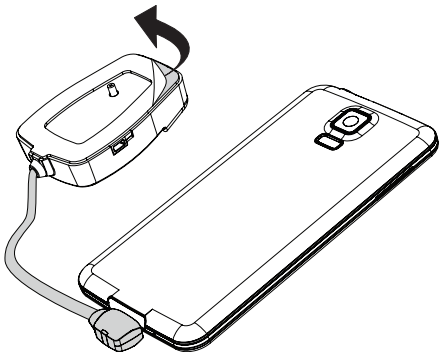

7. Center sensor onto back of merchandise. Firmly press sensor for 10 seconds.

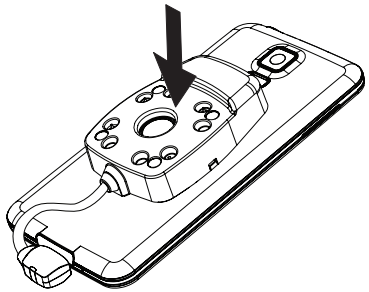

7 Place sensor onto base to transfer code onto sensor. Base and sensor are now synched to each other only.

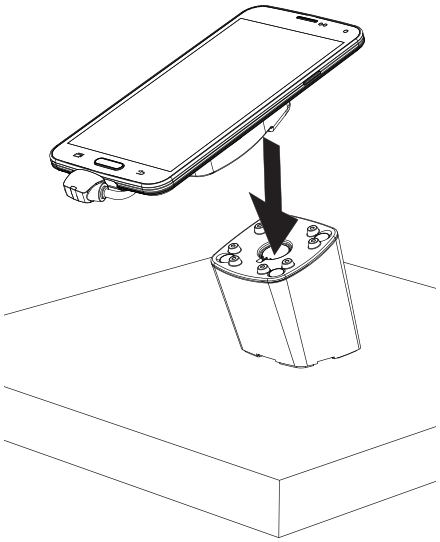

Contains Module FCC ID: 2AFR8ED0991

THIS DEVICE COMPLIES WITH PART 15 OF THE FCC RULES. OPERATION IS SUBJECT TO THE FOLLOWING TWO CONDITIONS.

(1) THIS DEVICE MAY NOT CAUSE HARMFUL INTERFERENCE, AND

(2) THIS DEVICE MUST ACCEPT ANY INTERFERENCE RECEIVED, INCLUDING INTERFERENCE THAT MAY CAUSE UNDESIRED OPERATION.

Warning: Changes or modifications to this device not expressly approved by InVue Security could void the user's authority to operate the equipment.

NOTE: This equipment has been tested and found to comply with the limits for a Class B digital device, pursuant to Part 15 of the FCC Rules. These limits are designed to provide reasonable protection against harmful interference in a residential installation. This equipment generates, uses, and can radiate radio frequency energy and, if not installed and used in accordance with the instructions, may cause harmful interference to radio communications. However, there is no guarantee that interference will not occur in a particular installation. If this equipment does cause harmful interference to radio or television reception, which can be determined by turning the equipment off and on, the user is encouraged to try to correct the interference by one or more of the following measures:

- Reorient or relocate the receiving antenna.
- Increase the separation between the equipment and receiver.
- Connect the equipment into an outlet on a circuit different from that to which the receiver is connected.
- Consult the dealer or an experienced radio/TV technician for help.

This equipment complies with FCC radiation exposure limits set forth for an uncontrolled environment. This equipment should be installed and operated with minimum distance 20cm between the radiator and your body. This transmitter must not be co-located or operating in conjunction with any other antenna or transmitter.

SD0278 Rev1 08/27/15

www.invuesecurity.com

NA / LATAM // 704.752.6513 • 888.55.INVUE
EMEA // +31.23.8900150
APAC // +852.3127.6811

© 2015 InVue Security Products Inc. All rights reserved.
InVue is a registered trademark of InVue Security Products.