Samsung W1000
Stand with Quick Connect - DVW110
Quick Connect Sensor - DVW220/230
Custom Charge Head - DVW440

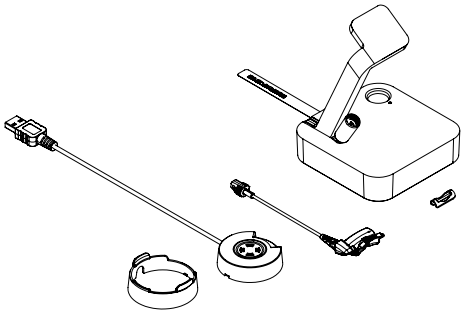

1 **Band Sensor Installation:**
Select the watch band with the buckle.

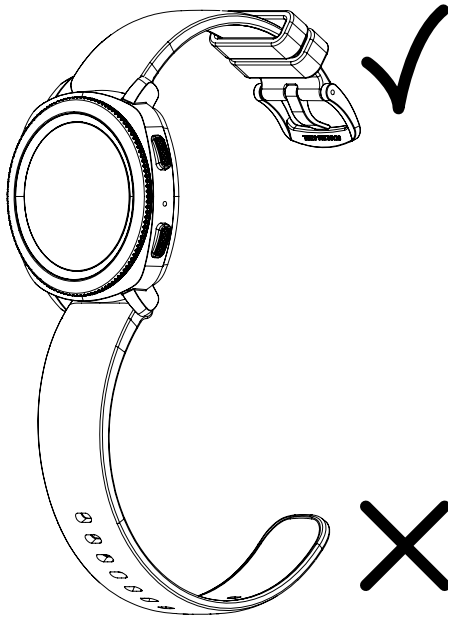

2 Use the pin removal tool to disengage the watch pin.

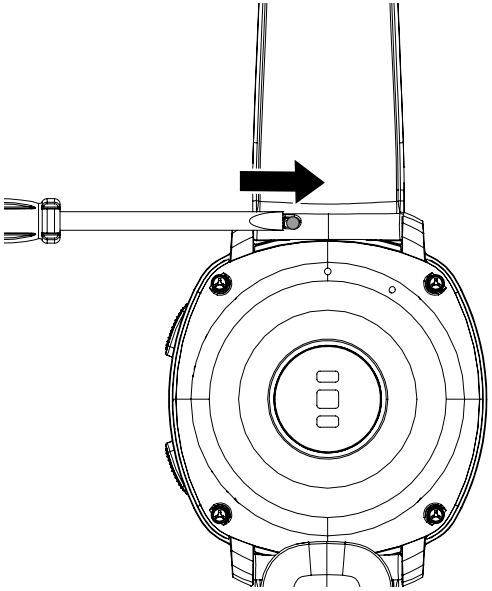

3 Remove the watch band from the watch body.

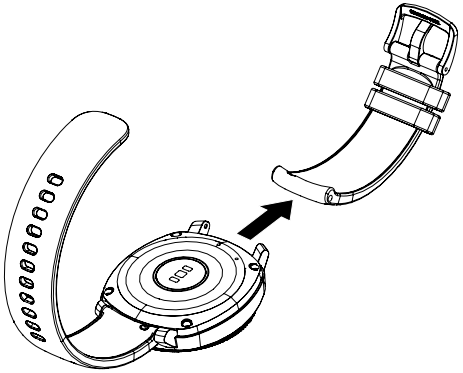

4a Inspect the sensor to make sure that the tape on the sensor is intact and that the switch is in the down position.

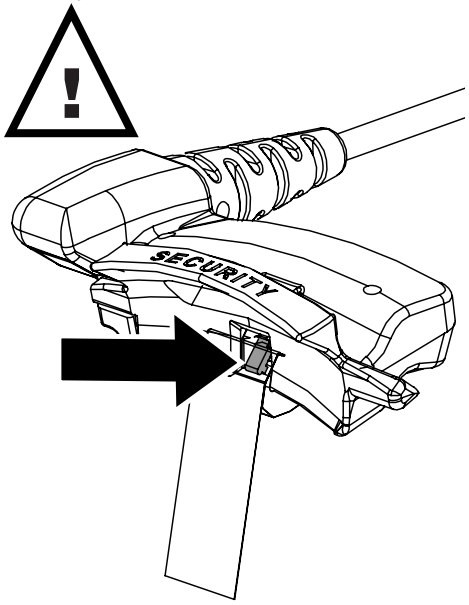

4b Align the sensor with the watch body as shown. Make sure that the tape on the sensor fits between the sensor and the watch body.

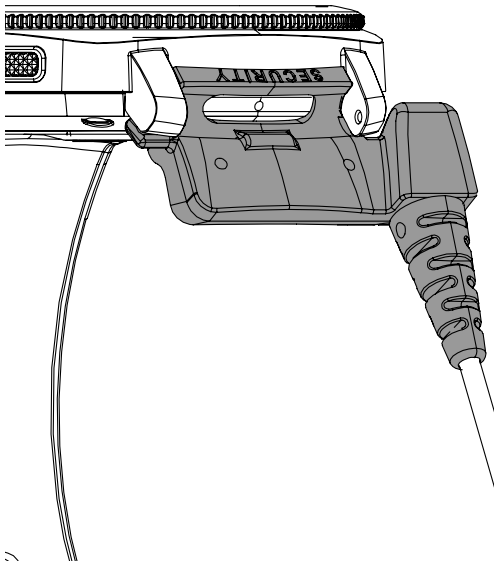

5 With the sensor held in place against the watch body, reinsert the side of the watch band without the pin into the watch body.

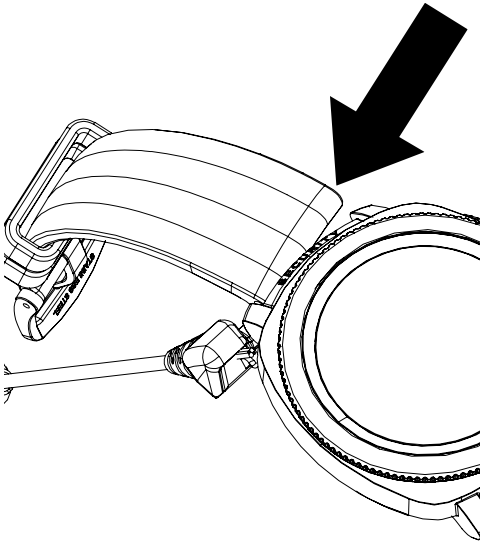

6 Use the tool or a fingernail to depress the other pin and insert that side into the watch body.

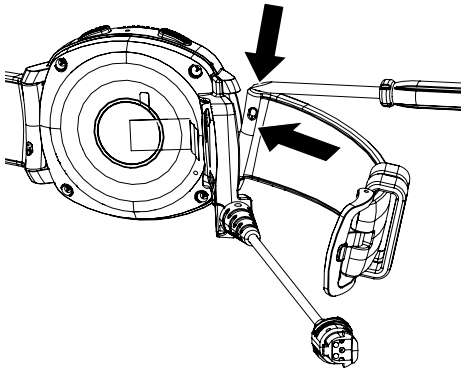

7 Gently tug the watch band to make sure it is secured.

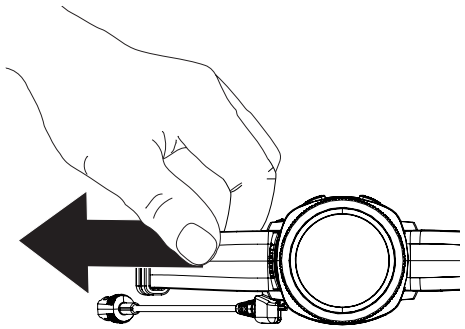

8 Pull the tape from the sensor to activate the alarm

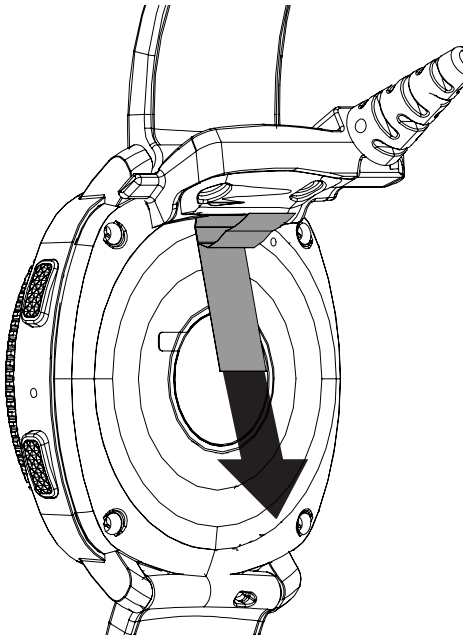

9 Use the pin removal tool to disengage the pin on the other band.

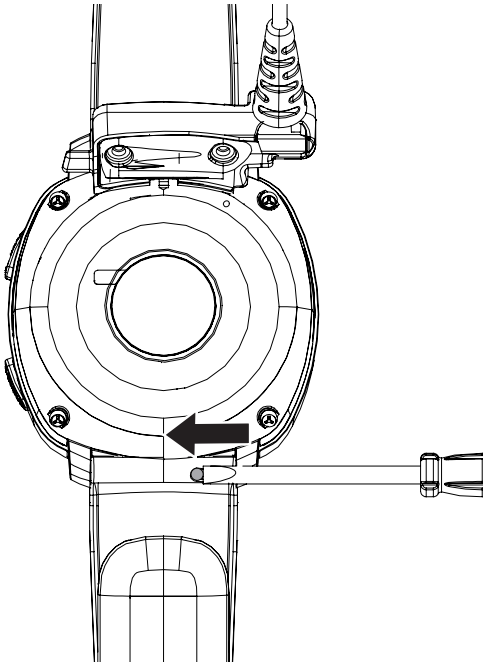

10 Remove the watch band from the watch body.

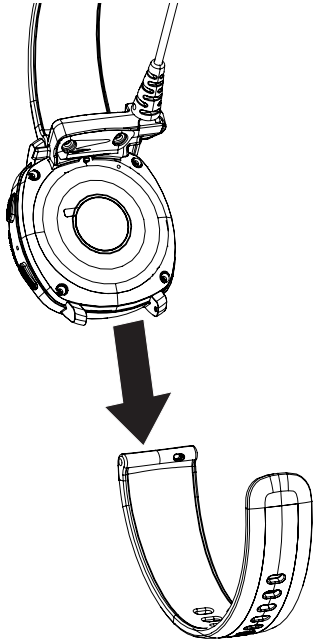

11 Orient the band clip so that the flat side of the clip will sit along the top side of the band.

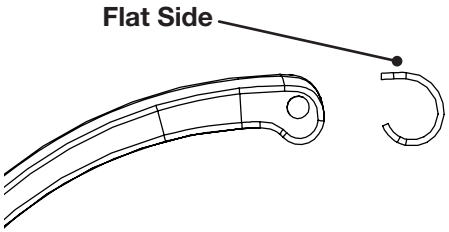

Slide the clip over the band from the side with the pin.

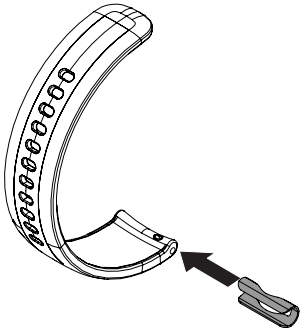

12 Use the pin removal tool to push in the other side of the pin and pivot the band into place.

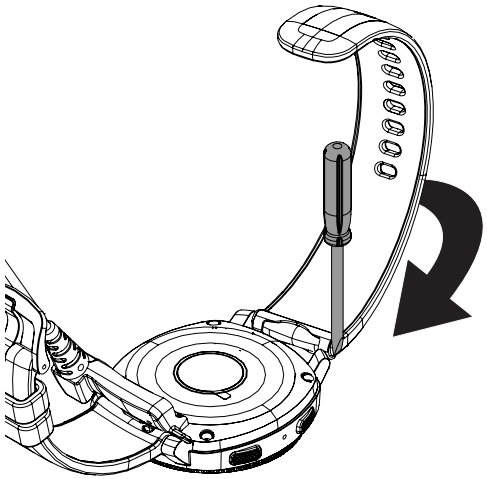

13 **Stand Installation:**
Use the provided alcohol wipe to clean the surface where the stand will be placed. Allow it to dry completely.

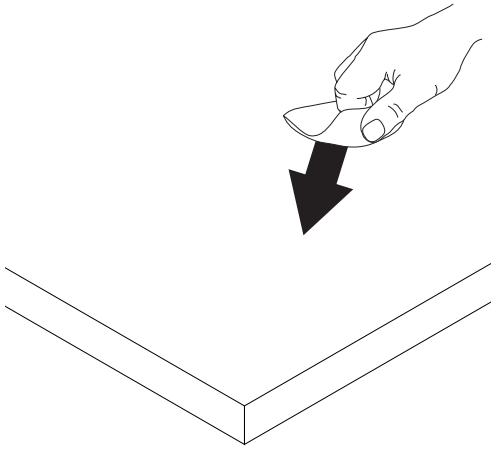

14 Peel the liner from the adhesive on the bottom of the stand.

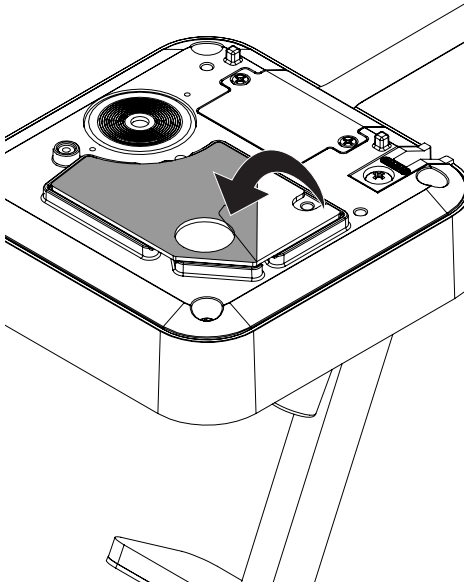

15 Place the stand in the desired location and apply pressure for at least 10 seconds.

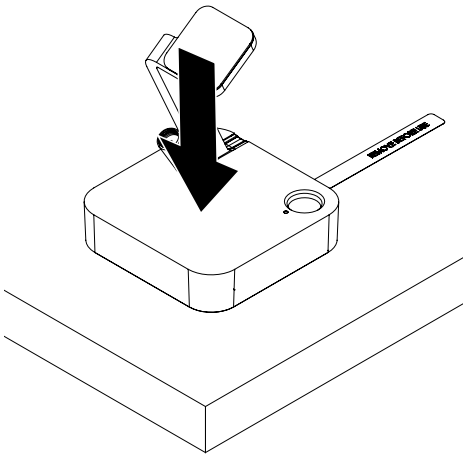

16 **Charger Installation:**
Peel the backing from the circular adhesive.

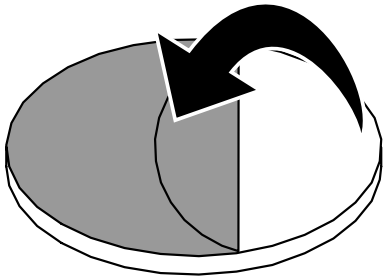

17 Place the adhesive on the end of the stand's arm. Apply pressure for at least 10 seconds.

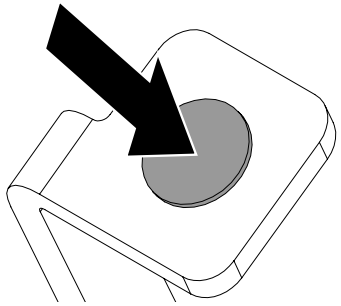

Peel the liner from the adhesive.

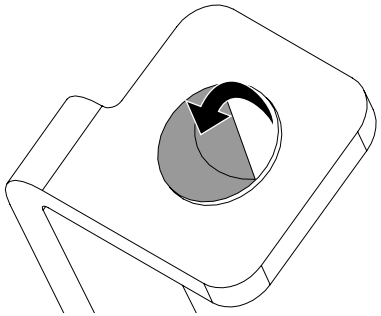

18 Orient the charger with the cable facing towards the stem and place onto the adhesive. Apply pressure for at least 10 seconds.

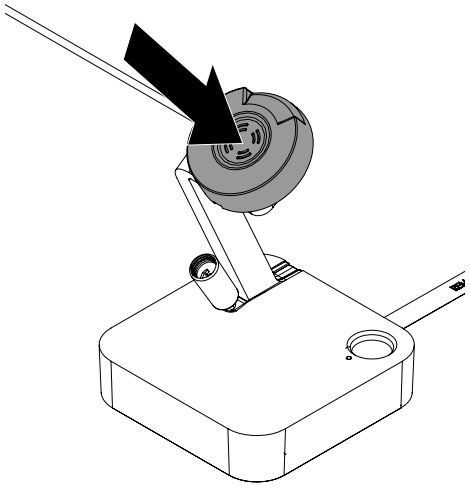

19 Remove the cable cover from the stem and route the charger cable into the channel as shown. Replace the cable cover to its original position to hold the cable in place.

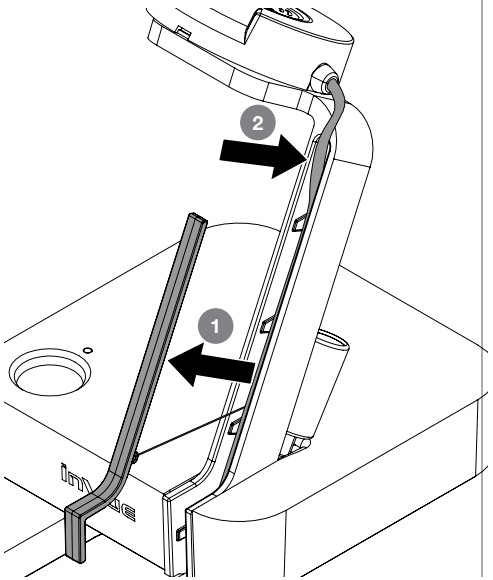

20 Snap the cover onto the charger.

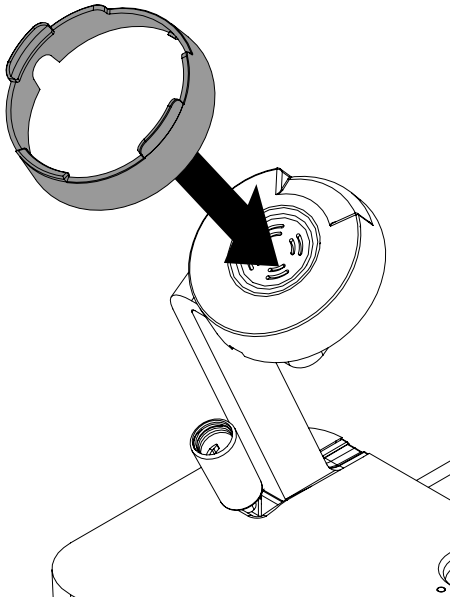

21 Pull the quick connect adapter from the unit.

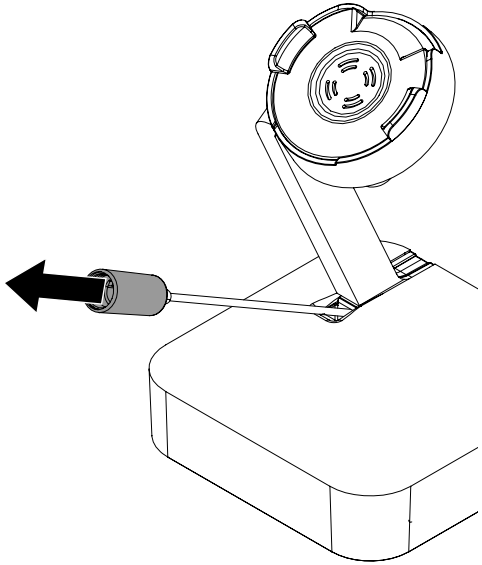

22 To connect the sensor head, pull back the barrel on the recoiler cable.

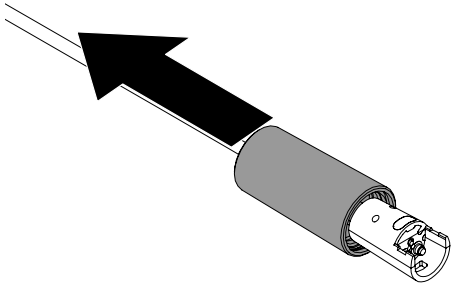

23 Insert the sensor end into the barrel on the recoiler cable.

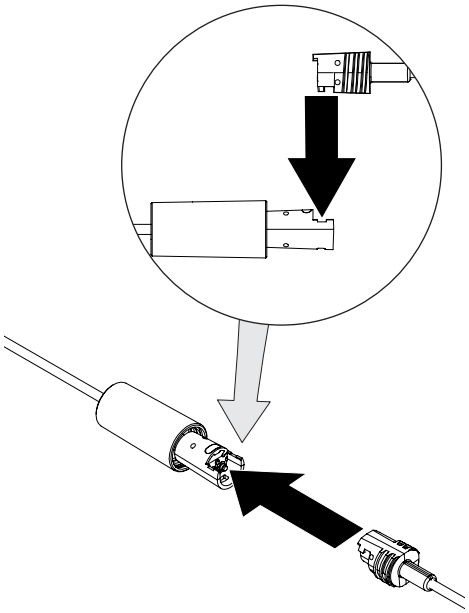

24 Twist the barrel over the sensor connection to secure.
Note: The internal threads are reversed, be sure that the threads are fully engaged when tightening.

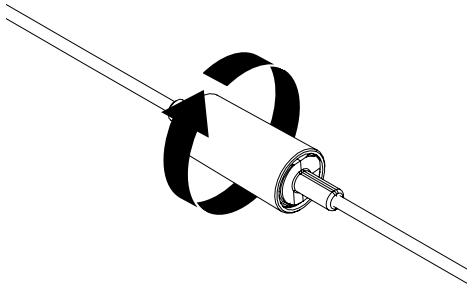

25 Place the watch and sensor onto the charger.

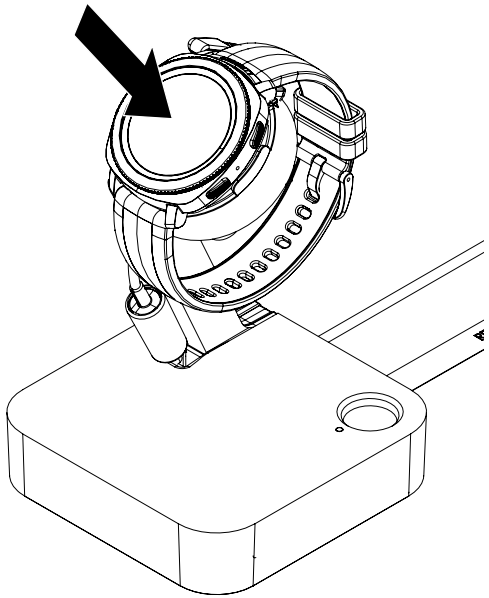

26 Plug the charger cable into the power supply. Plug the power supply into an outlet. Make sure that the watch is receiving power.

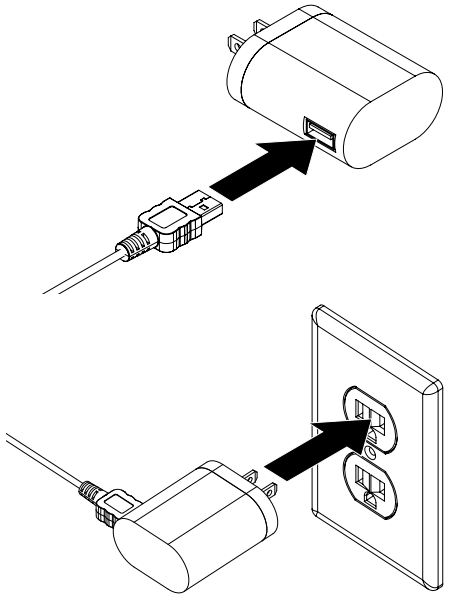

27 Pull the battery tab to alarm the unit.

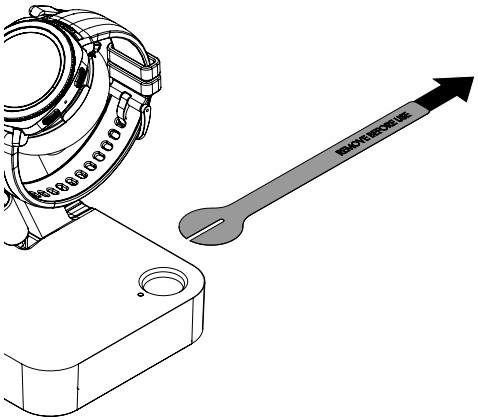

FCC WARNING STATEMENT

FCC Part 15.19 This device complies with part 15 of the FCC Rules. Operation is subject to the following two conditions: (1) this device may not cause harmful interference, and (2) this device must accept any interference received, including interference that may cause undesired operation. FCC Part 15.21 Any changes or modifications (including the antennas) to this device that are not expressly approved by the manufacturer may void the user's authority to operate the equipment.

FCC RADIATION EXPOSURE STATEMENT

(Wireless Charger Dock)
This equipment complies with FCC Radiation exposure limits set forth for an uncontrolled environment. This device and its antenna must not be co-located or operating in conjunction with any other antenna or transmitter. This equipment should be installed and operated with a minimum distance of 20cm between the radiator and your body.

IC WARNING STATEMENT

This device complies with Industry Canada licence-exempt RSS standard(s). Operation is subject to the following two conditions: (1) this device may not cause interference, and (2) this device must accept any interference, including interference that may cause undesired operation of the device.Le présent appareil est conforme aux CNR d'Industrie Canada applicables aux appareils radio exempts de licence. L'exploitation est autorisée aux deux conditions suivantes : (1) l'appareil ne doit pas produire de brouillage, et (2) l'utilisateur de l'appareil doit accepter tout brouillage radioélectrique subi, même si le brouillage est susceptible d'en compromettre le fonctionnement.

Under Industry Canada regulations, this radio transmitter may only operate using an antenna of a type and
maximum (or lesser) gain approved for the transmitter by Industry Canada. To reduce potential radio nterference to other users, the antenna type and its gain should be so chosen that the equivalent isotropically radiated power (e.i.r.p.) is not more than that necessary for successful communication. Conformément à la réglementation d'Industrie Canada, le présent émetteur radio peut fonctionner avec une antenne d'un type et d'un gain maximal (ou inférieur) approuvé pour l'émetteur par Industrie Canada. Dans le but de réduire les risques de brouillage radioélectrique à l'intention des autres utilisateurs, il faut choisir le type d'antenne et son gain de sorte que la puissance isotrope rayonnée équivalente (p.i.r.e.) ne dépasse pas l'intensité nécessaire à l'établissement d'une communication satisfaisante.

IC RADIATION EXPOSURE STATEMENT

This equipment complies with the ICES RF radiation exposure limits set forth for an uncontrolled environment. This equipment should be installed and operated with a minimum distance of 20cm between the radiator and any part of the human body. Cet équipement est conforme aux limites d'exposition aux radiations ICES définies pour un environnement non contrôlé . Cet équipement doit être installé et utilisé à une distance minimale de 20 cm entre le radiateur et unepartie de votre corps.

NOTE:

This equipment has been tested and found to comply with the limits for a Class B digital device, pursuant to part 15 of the FCC Rules. These limits are designed to provide reasonable protection against harmful interference in a residential installation. This equipment generates, uses and can radiate radio frequency energy and, if not installed and used in accordance with the instructions, may cause harmful interference to radio communications. However, there is no guarantee that interference will not occur in a particular installation. If this equipment does cause harmful interference to radio or television reception, which can be determined by turning the equipment off and on, the user is encouraged to try to correct the interference by one or more of the following measures: —Reorient or relocate the receiving antenna. —Increase the separation between the equipment and receiver. —Connect the equipment into an outlet on a circuit different from that to which the receiver is connected. —Consult the dealer or an experienced radio/ TV technician for help.

SD0617 Rev2 08/27/18

www.invue.com

NA / LATAM // 704.752.6513 • 888.55.INVUE
EMEA // +31.23.8900150
APAC // +852.3127.6811

© 2018 InVue Security Products Inc. All rights reserved.
InVue is a registered trademark of InVue Security Products.