FCC Part 22H 24E

Measurement And Test Report

For

weeCONOMY ASIA LIMITED.

Unit B, 11 Floor, Silvercorp International Tower, 707-713 Nathan Road, KowLoon HongKong

FCC ID: 2AFSQWP11

May 18, 2015

This Report Concerns:	**Equipment Type:**
☒ Original Report	weePHONE

Report Number:	MTI150410001RF-2
Test Engineer:	Bill Chen Bill Chen
Reviewed By:	Jason Zheng Jason zheng
Approved & Authorized By:	Hebe Lee Hebe Lee
Test Date:	May 05, 2015 – May 18, 2015
Prepared By:	**Shenzhen Microtest Technology Co.,Ltd** 6F, Zhongbao Building, Gushu, Bao' an District, Shenzhen, P.R.China Tel: +86-755-8885 0135 Fax: +86-755-8885 0136

Note: This test report is limited to the above client company and the product model only. It may not be duplicated without prior written consent of Shenzhen Microtest Technology Co.,Ltd.

TEST RESULT CERTIFICATION	
Applicant's name ..... :	weeCONOMY ASIA LIMITED.
Address..... :	Unit B, 11 Floor, Silvercorp International Tower, 707-713 Nathan Road, KowLoon HongKong
Manufacture's Name ..... :	weeCONOMY ASIA LIMITED.
Address..... :	Unit B, 11 Floor, Silvercorp International Tower, 707-713 Nathan Road, KowLoon HongKong
Product description	
Product name .....:	weePHONE
Model and/or type reference :	WP11
Serial Model.....:	N/A
Standards..... :	FCC Part22 & FCC P24
Test procedure.....	ANSI C63.4-2009

Table of Contents

	Page
1 . SUMMARY OF TEST RESULTS	**5**
1.1 TEST FACILITY	5
1.2 MEASUREMENT UNCERTAINTY	6
2 . GENERAL INFORMATION	**7**
2.1 GENERAL DESCRIPTION OF EUT	7
2.2 DESCRIPTION OF TEST MODES	8
2.3 BLOCK DIGRAM SHOWING THE CONFIGURATION OF SYSTEM TESTED	9
2.4 DESCRIPTION OF SUPPORT UNITS(CONDUCTED MODE)	10
2.5 EQUIPMENTS LIST FOR ALL TEST ITEMS	11
3 . CONDUCTED OUTPUT POWER	**12**
3.1 APPLIED PROCEDURES / LIMIT	12
3.1.1 TEST PROCEDURE	12
3.1.2 DEVIATION FROM STANDARD	12
3.1.3 TEST SETUP	12
3.1.4 EUT OPERATION CONDITIONS	12
3.1.5 TEST RESULTS	13
4 . RADIATED OUTPUT POWER	**14**
4.1 APPLIED PROCEDURES / LIMIT	14
4.1.1 TEST PROCEDURE	14
4.1.2 DEVIATION FROM STANDARD	14
4.1.3 TEST SETUP	15
4.1.4 EUT OPERATION CONDITIONS	15
4.1.5 TEST RESULTS	16
5 . OCCUPY BANDWIDTH	**17**
5.1 APPLIED PROCEDURES / LIMIT	17
5.1.1 TEST PROCEDURE	17
5.1.2 DEVIATION FROM STANDARD	17
5.1.3 TEST SETUP	17
5.1.4 EUT OPERATION CONDITIONS	17
5.1.5 TEST RESULTS	18
6 . FREQUENCY STABLITY	**20**
6.1 APPLIED PROCEDURES / LIMIT	20
6.1.1 TEST PROCEDURE	20
6.1.2 DEVIATION FROM STANDARD	20
6.1.3 TEST SETUP	20
6.1.4 EUT OPERATION CONDITIONS	20
6.1.5 TEST RESULTS	21

Table of Contents

Page

7 . CONDUCTED SPURIOUS EMISSIONS 22
7.1 APPLIED PROCEDURES / LIMIT 22
7.1.1 TEST PROCEDURE 22
7.1.2 DEVIATION FROM STANDARD 22
7.1.3 TEST SETUP 22
7.1.4 EUT OPERATION CONDITIONS 22
7.1.5 TEST RESULTS 23
NOTE: ALL MODE HAS BEEN TESTED, ONLY WORST DATA SHOWN IN THIS REPORT. 23
8 . RADIATED SPURIOUS EMISSIONS 25
8.1 APPLIED PROCEDURES / LIMIT 25
8.1.1 TEST PROCEDURE 25
8.1.2 DEVIATION FROM STANDARD 25
8.1.3 TEST SETUP 25
8.1.4 EUT OPERATION CONDITIONS 26
8.1.5 TEST RESULTS 27
NOTE: ALL MODE HAS BEEN TESTED, ONLY WORST DATA SHOWN IN THIS REPORT. 27
9 . BAND EDGE 28
9.1 APPLIED PROCEDURES / LIMIT 28
9.1.1 TEST PROCEDURE 28
9.1.2 DEVIATION FROM STANDARD 28
9.1.3 TEST SETUP 28
9.1.4 EUT OPERATION CONDITIONS 28
9.1.5 TEST RESULTS 29
NOTE: ALL MODE HAS BEEN TESTED, ONLY WORST DATA SHOWN IN THIS REPORT. 29
10 . CONDUCTED EMISSION MEASUREMENT 30
10.1 POWER LINE CONDUCTED EMISSION LIMITS 30
10.2 TEST PROCEDURE 31
10.3 DEVIATION FROM TEST STANDARD 31
10.4 TEST SETUP 31
10.5 EUT OPERATING CONDITIONS 31
10.6 TEST RESULTS 32

1. SUMMARY OF TEST RESULTS

Test procedures according to the technical standards:

Description of Test Item	Standard	Results
Conducted Output power	FCC PART 2: 2.1046 FCC PART 22H: 22.913 (a) FCC PART 24E: 24.232 (c)	PASS
Radiated Output power(erp/eirp)	FCC PART 22H:22.913 (a) FCC PART 24E:24.232(c)	PASS
Occupied bandwidth	FCC PART 2: 2.1049 FCC PART 22H: 22.917 (b) FCC PART 24E: 24.238 (b)	PASS
Frequency stability	FCC PART 2: 2.1055 FCC PART 22H: 22.355 FCC PART 24E: 24.235	PASS
Conducted spurious emission (Antenna terminal)	FCC PART 2: 2.1051 FCC PART 22H: 22.917 FCC PART 24E: 24.238	PASS
Radiated spurious emissions	FCC PART 2: 2.1053 FCC PART 22H: 22.917 FCC PART 24E: 24.238	PASS
Band edge compliance	FCC PART 22H: 22.917 (b) FCC PART 24E: 24.238 (b)	PASS
Power Line Conducted Emission Test	FCC Part 15: 15.207 ANSI C63.4: 2009	PASS

NOTE:

(1)" N/A" denotes test is not applicable in this Test Report

1.1 TEST FACILITY

Shenzhen Toby Technology Co., Ltd.
Add.: 10/F.,A Block,Jiada R&D Bldg.,No.5 Songpingshan, Road, Science&Technology Park, Shenzhen, 518057
FCC Registration No.:811562

1.2 MEASUREMENT UNCERTAINTY

The reported uncertainty of measurement **y ± U**，where expended uncertainty **U** is based on a standard uncertainty multiplied by a coverage factor of **k=2**，providing a level of confidence of approximately **95** %。

No.	Item	Uncertainty
1	Conducted Emission Test	±1.38dB
2	RF power,conducted	±0.16dB
3	Spurious emissions,conducted	±0.21dB
4	All emissions,radiated(<1G)	±4.68dB
5	All emissions,radiated(>1G)	±4.89dB
6	Temperature	±0.5°C
7	Humidity	±2%

2. GENERAL INFORMATION

2.1 GENERAL DESCRIPTION OF EUT

Equipment	weePHONE
Trade Name	weeCONOMY
Model Name	WP11
Serial Model	N/A
Model Difference	N/A
Product Description	The EUT is a weePHONE Operation Frequency: WCDMA1900 Modulation Type: QPSK Antenna Designation: Please see Note 3. Output Power(Conducted): 23.56 dBm Antenna Gain (dBi) 1dbi Based on the application, features, or specification exhibited in User's Manual, the EUT is considered as an ITE/Computing Device. More details of EUT technical specification, please refer to the User's Manual.
Channel List	Please refer to the Note 2.
Adapter	Model: GE0061U-05100 AC Power Input: 100-240V~50/60Hz 0.2A Output: 5.0⎓1V
Battery	DC 3.8V, 2000mAh (7.6Wh)
Connecting I/O Port(s)	Please refer to the User's Manual

Note:

1. For a more detailed features description, please refer to the manufacturer’s specifications or the User's Manual.
2. Test Mode

Mode	Channel	Frequency(MHz)
WCDMA1900	9262	1852.4
	9400	1880.0
	9538	1907.6

3. Table for Filed Antenna

Ant.	Brand	Model Name	Antenna Type	Connector	Gain (dBi)	NOTE
A	N/A	N/A	internal antenna	Pifa-type	1dbi	Antenna

2.2 DESCRIPTION OF TEST MODES

To investigate the maximum EMI emission characteristics generates from EUT, the test system was pre-scanning tested base on the consideration of following EUT operation mode or test configuration mode which possible have effect on EMI emission level. Each of these EUT operation mode(s) or test configuration mode(s) mentioned above was evaluated respectively.

Pretest Mode	Description
Mode 1	WCDMA1900
Mode 2	Link Mode

For Conducted Emission	
Final Test Mode	Description
Mode2	Link Mode

For Radiated Emission	
Final Test Mode	Description
Mode 1	WCDMA1900

Note:

(1) The measurements are performed at the highest, middle, lowest available channels.

(2) The measurements are performed at all Bit Rate of Transmitter, the worst data was reported

2.3 BLOCK DIGRAM SHOWING THE CONFIGURATION OF SYSTEM TESTED

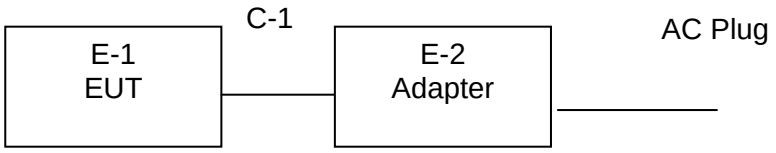

2.4 DESCRIPTION OF SUPPORT UNITS(CONDUCTED MODE)

The EUT has been tested as an independent unit together with other necessary accessories or support units. The following support units or accessories were used to form a representative test configuration during the tests.

Item	Equipment	Brand	Model/Type No.	Series No.	Note
E-1	weePHONE	weeCONOMY	WP11	N/A	EUT
E-2	Adapter	N/A	GE0061U-05100	N/A	

Item	Shielded Type	Ferrite Core	Length	Note
C-1	NO	NO	1.0m	
C-2	NO	NO	0.8m	

Note:

(1) The support equipment was authorized by Declaration of Confirmation.

(2) For detachable type I/O cable should be specified the length in cm in『Length』column.

2.5 EQUIPMENTS LIST FOR ALL TEST ITEMS

Radiation Test equipment

Equipment	Manufacturer	Model No.	Serial No.	Last Cal	Cal.Due Date
Spectrum Analyzer	Agilent	E4407B	MY45106456	Mar. 20, 2015	Mar. 19, 2016
Spectrum Analyzer	ROHDE&SCHWARZ	FSP30	DE25181	Aug. 10, 2014	Aug. 09, 2015
EMI Test Receiver	ROHDE&SCHWARZ	ESCI	101165	Aug. 10, 2014	Aug. 09, 2015
Bilog Antenna	ETS-LINDGREN	3142E	00117537	Mar. 07, 2015	Mar. 06, 2016
Bilog Antenna	ETS-LINDGREN	3142E	00117542	Mar. 07, 2015	Mar. 06, 2016
Hom Antenna	ETS-LINDGREN	3117	00143207	Mar. 07, 2015	Mar. 06, 2016
Hom Antenna	ETS-LINDGREN	3117	00143209	Mar. 07, 2015	Mar. 06, 2016
Pre-anplifier	HP	11909A	185903	Mar. 07, 2015	Mar. 06, 2016
Pre-anplifier	HP	8447B	3008A00849	Mar. 07, 2015	Mar. 06, 2016
Cable	HUBER+SUHNER	100	SUCOFLEX	Mar. 07, 2015	Mar. 06, 2016
Signal Generator	ROHDE&SCHWARZ	SML03	IKW682-054	Feb. 11, 2015	Feb. 10, 2016
Positioning Controller	ETS-LINDGREN	2090	N/A	N/A	N/A

Conduction Test equipment

Equipment	Manufacturer	Model No.	Serial No.	Last Cal	Cal.Due Date
EMI Test Receiver	ROHDE&SCHWARZ	ESCI	1000321	2014-08-10	2015-08-09
50Ω Coaxial Switch	Anntsu	MP59B	X10321	2014-08-10	2015-08-09
LISN	ROHDE&SCHWARZ	ENV216	101131	2014-08-10	2015-08-09
LISN	SCHWARZBECK	NNBL 8226-2	8226-2/164	2014-08-10	2015-08-09

3. CONDUCTED OUTPUT POWER

3.1 APPLIED PROCEDURES / LIMIT

Section	Test Item	Limit	Result
22.913 (a) 24.232 (c)	Conducted Output power	38.5dBm(ERP) for GSM850 33dBm for GSM1900	PASS

3.1.1 TEST PROCEDURE

(1) The EUT's RF output port was connected to base station.
(2) A call is set up by the SS according to the generic call set up procedure
(3) Set EUT at maximum power level through base station by power level command
(4) Measure the maximum output power of EUT at each frequency band and mode by base station.

3.1.2 DEVIATION FROM STANDARD

No deviation.

3.1.3 TEST SETUP

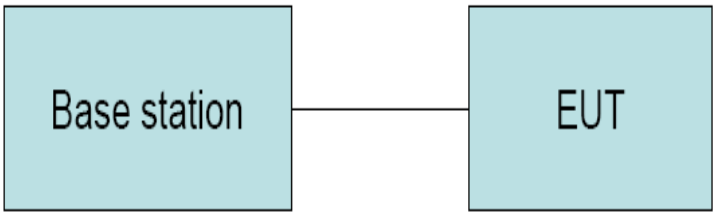

3.1.4 EUT OPERATION CONDITIONS

The EUT tested system was configured as the statements of 2.4 Unless otherwise a special operating condition is specified in the follows during the testing.

3.1.5 TEST RESULTS

EUT：	weePHONE	Model Name ：	WP11
Temperature：	25 ℃	Relative Humidity：	60%
Pressure：	1012 hPa	Test Voltage ：	DC 5Vfrom adapter
Test Mode ：	WCDMA1900		

Mode	Channel	PK Output Power(dBm)	Limit	
			ERP(dBm)	EIRP(dBm)
WCDMA1900	9262	22.05	/	33
	9400	22.32	/	33
	9538	22.28	/	33

4. RADIATED OUTPUT POWER

4.1 APPLIED PROCEDURES / LIMIT

Section	Test Item	Limit	Result
22.913 (a) 24.232 (c)	Conducted Output power	38.5dBm(ERP) for GSM850 33dBm for GSM1900	PASS

4.1.1 TEST PROCEDURE

1. The EUT was placed on an non-conductive rotating platform with 0.8 meter height in an anechoic chamber. The radiated emission at the fundamental frequency was measured at 3 m with a test antenna and a spectrum analyzer with RBW= 3MHz,VBW= 3MHz and peak detector settings.
2. During the measurement, the EUT was enforced in maximum power and linked with a base station. The highest emission was recorded from analyzer power level (LVL) from the 360 degrees rotation of the turntable and the test antenna raised and lowered over a range from 1 to 4 meters in both horizontally and vertically polarized orientations
3. Effective Isotropic Radiated Power (EIRP) was measured by substitution method according to TIA/EIA-603-C. The EUT was replaced by dipole antenna (for frequency lelow 1GHz) or Horn antenna(for frequecny above 1GHz) at same location with same polarize of reveiver antenna and then a known power of each measure frequency from S.G. was applied into the dipole antenna or Horn antenna through a Tx cable, and then recorded the maximum Analyzer reading through raised and lowered the test antenna. The correction factor (in dB) = S.G. - Tx Cable loss + Substitution antenna gain –Substitution antenna Loss(only for Dipole antenna) - Analyzer reading. Then the EUT's EIRP was calculated with the correction factor, EIRP= LVL + Correction factor and ERP = EIRP – 2.15

4.1.2 DEVIATION FROM STANDARD

No deviation.

4.1.3 TEST SETUP

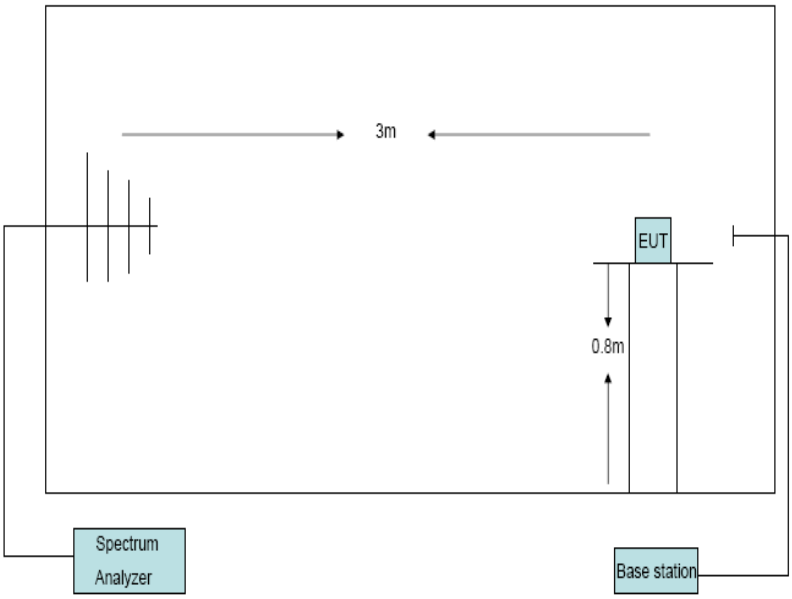

4.1.4 EUT OPERATION CONDITIONS

The EUT tested system was configured as the statements of 2.4 Unless otherwise a special operating condition is specified in the follows during the testing.

4.1.5 TEST RESULTS

EUT：	weePHONE	Model Name ：	WP11
Temperature：	25 ℃	Relative Humidity：	60%
Pressure：	1012 hPa	Test Voltage ：	DC 5Vfrom adapter
Test Mode ：	WCDMA1900		

Mode	Channel	LVL (dBm)	Correction factor(dB)	ERP (dBm)	EIRP (dBm)	Limit	
						ERP(dBm)	EIRP(dBm)
WCDMA1900	9262	-2.9	22.59	/	19.69	/	33
	9400	-2.6	22.61	/	20.01	/	33
	9538	-2.7	22.63	/	19.93	/	33
Note: EIRP=LVL+Correction factor							

5. OCCUPY BANDWIDTH

5.1 APPLIED PROCEDURES / LIMIT

Section	Test Item	Limit	Result
22.917 (b) 24.238 (b)	Occupied bandwidth	/	PASS

5.1.1 TEST PROCEDURE

1. The EUT' RF output port was connected to Spectrum Analyzer and Base Station via power divider.

2. Spectrum analyzer's occupied bandwidth measure function was used to measure 99% bandwidth and -26dBc bandwidth

5.1.2 DEVIATION FROM STANDARD

No deviation.

5.1.3 TEST SETUP

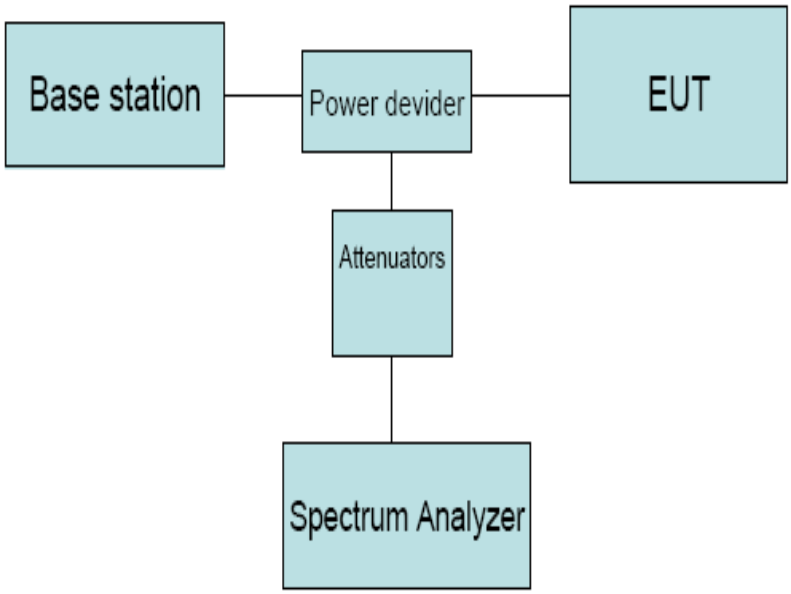

5.1.4 EUT OPERATION CONDITIONS

The EUT tested system was configured as the statements of 2.1 Unless otherwise a special operating condition is specified in the follows during the testing.

5.1.5 TEST RESULTS

EUT：	weePHONE	Model Name ：	WP11
Temperature：	25 ℃	Relative Humidity：	60%
Pressure：	1015 hPa	Test Voltage ：	DC 5Vfrom adapter
Test Mode ：	WCDMA1900		

Mode	Channel	-26dBc bandwidth (KHz)	99% bandwidth (KHz)	Limit
WCDMA1900	9262	4646	4138.5	/
	9400	4665	4152.7	/
	9538	4652	4132.7	/
Note: All mode has been tested, only worst data shown in this report.				

WCDMA1900 CH9262

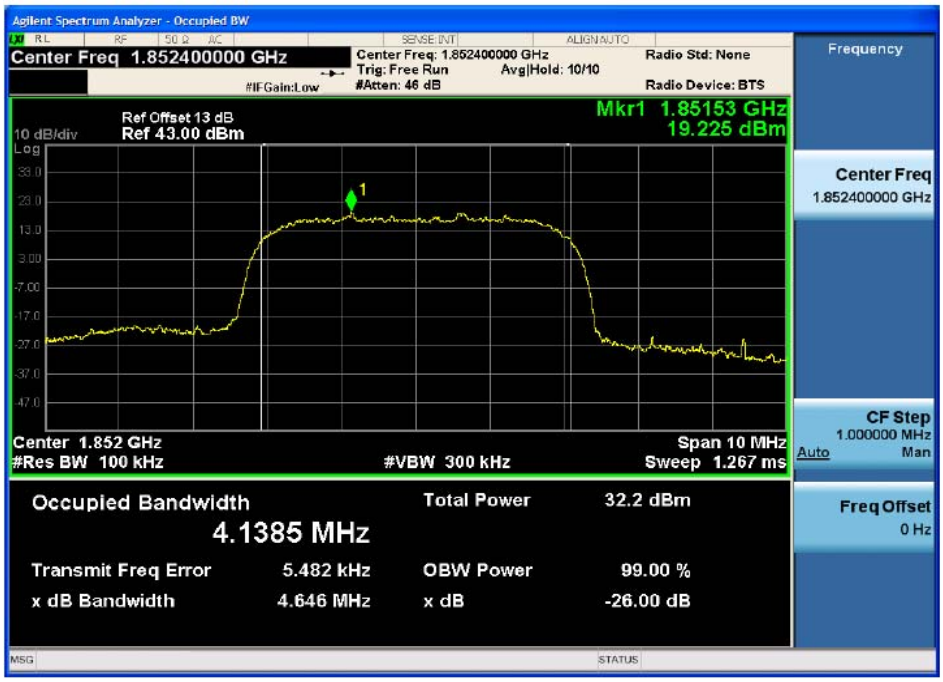

WCDMA1900 CH9400

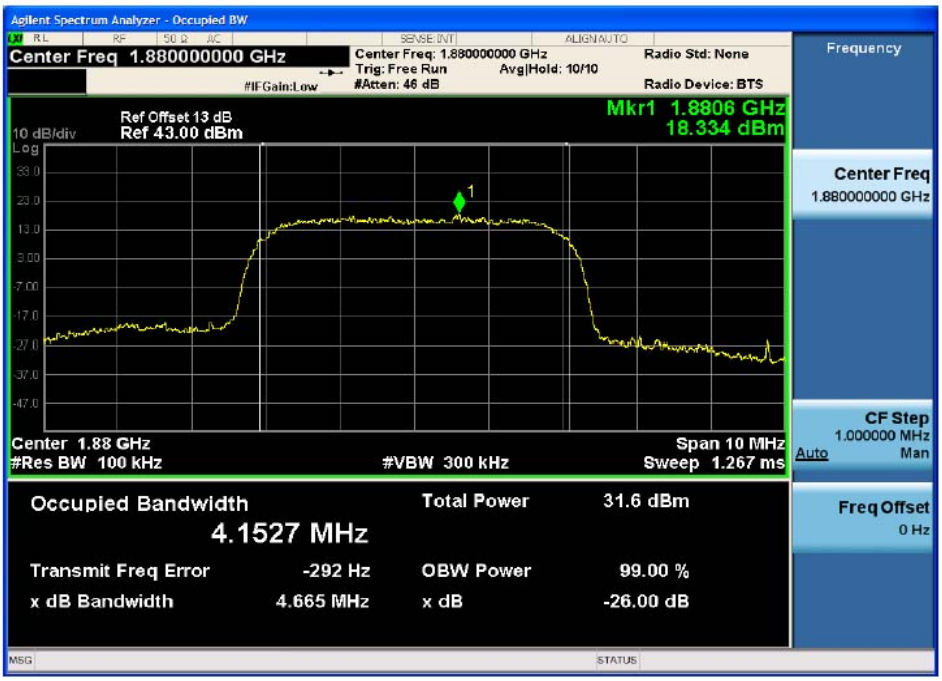

WCDMA1900 CH9538

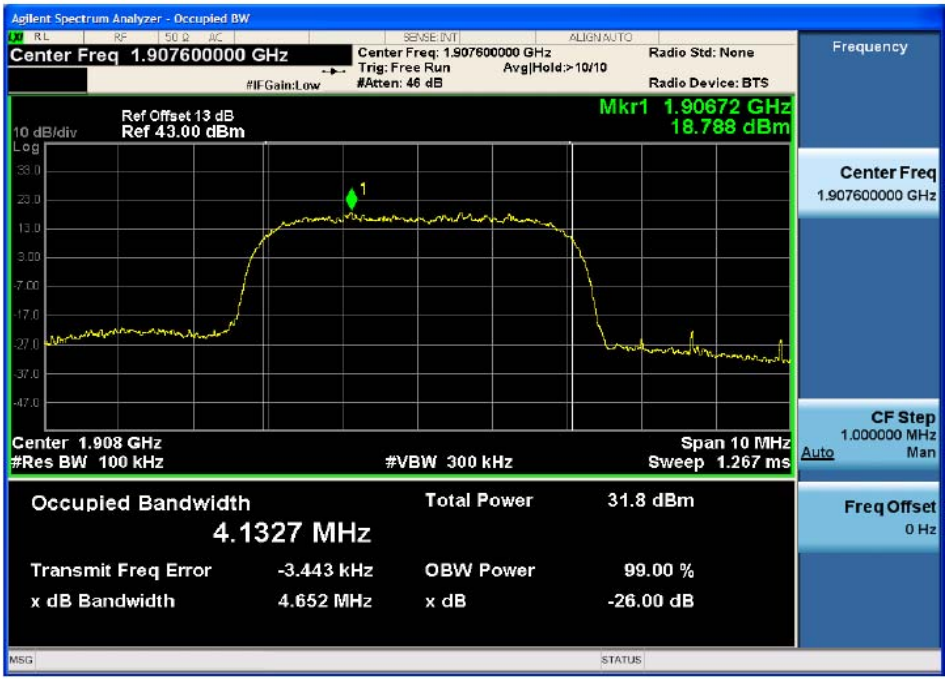

6. FREQUENCY STABLITY

6.1 APPLIED PROCEDURES / LIMIT

Section	Test Item	Limit	Result
22.355 24.235	Frequency stability	± 2.5 ppm	PASS

6.1.1 TEST PROCEDURE

Test Procedures for Temperature Variation:
1. The EUT was set up in the thermal chamber and connected with the base station.
2. With power OFF, the temperature was decreased to -10°C and the EUT was stabilized for three hours. Power was applied and the maximum change in frequency was recorded within one minute.
3. With power OFF, the temperature was raised in 10°C step up to 45°C. The EUT was stabilized at each step for at least half an hour. Power was applied and the maximum frequency change was recorded within one minute.
4. If the EUT can not be turned on at -10°C, the testing lowest temperature will be raised in 10°C step until the EUT can be turned on.

Test Procedures for Voltage Variation
1. The EUT was placed in a temperature chamber at 25±5° C and connected with the base station.
2. The power supply voltage to the EUT was varied from DC 5V to 3.5V
3. The variation in frequency was measured for the worst case.

6.1.2 DEVIATION FROM STANDARD

No deviation.

6.1.3 TEST SETUP

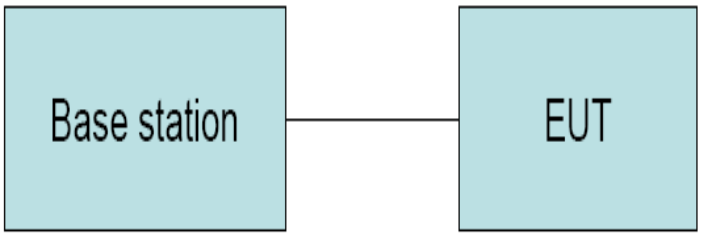

6.1.4 EUT OPERATION CONDITIONS

The EUT tested system was configured as the statements of 2.1 Unless otherwise a special operating condition is specified in the follows during the testing.

6.1.5 TEST RESULTS

EUT：	weePHONE	Model Name ：	WP11
Temperature：	25 ℃	Relative Humidity：	60%
Pressure：	1015 hPa	Test Voltage ：	DC 5Vfrom adapter
Test Mode ：	WCDMA1900		

Frequency Stability VS Voltage

Mode	Voltage (V)	Frequency error (Hz)	frequency error (ppm)
WCDMA1900 CH CH9400	4.2	39.92	0.02
	3.7	-25.58	-0.01
	3.5	33.95	0.02
Note: All mode has been tested, only worst data shown in this report.			

Frequency Stability VS Temperature

Mode	Temperature (°C)	Frequency error (Hz)	frequency error (ppm)
WCDMA1900 CH CH9400	-30	-37.46	-0.02
	-20	-23.46	-0.01
	-10	32.19	0.02
	0	37.55	0.02
	10	-23.72	-0.01
	20	-32.68	-0.02
	30	38.62	0.02
	40	-25.27	-0.01
	50	-31.28	-0.02

7. CONDUCTED SPURIOUS EMISSIONS

7.1 APPLIED PROCEDURES / LIMIT

Section	Test Item	Limit	Result
22.917 24.238	Conducted spurious emissions	-13dBm	PASS

7.1.1 TEST PROCEDURE

1. The EUT was connected to spectrum analyzer and base station via power divider.
2. The low, middle and high channels of each band and mode's spurious emissions for 30MHz to 10th Harmonic were measured by Spectrum analyzer.

7.1.2 DEVIATION FROM STANDARD

No deviation.

7.1.3 TEST SETUP

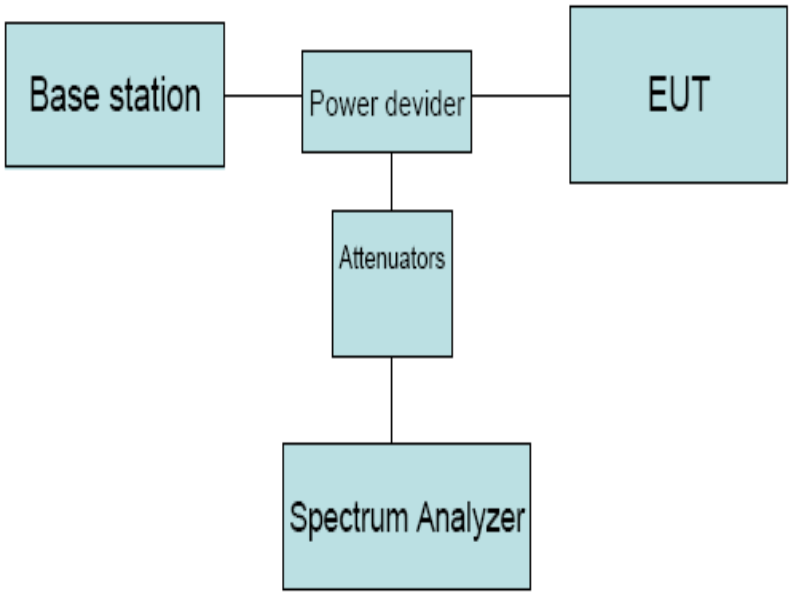

7.1.4 EUT OPERATION CONDITIONS

The EUT tested system was configured as the statements of 2.1 Unless otherwise a special operating condition is specified in the follows during the testing.

7.1.5 TEST RESULTS

NOTE: ALL MODE HAS BEEN TESTED, ONLY WORST DATA SHOWN IN THIS REPORT.

Test Mode: WCDMA1900 CH9262

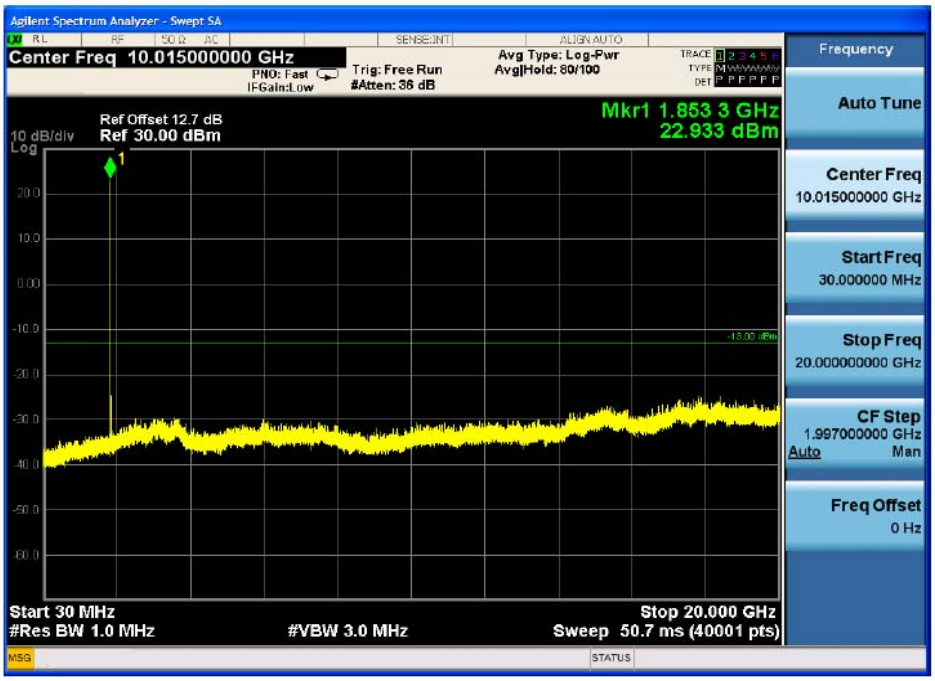

Test Mode: WCDMA1900 CH9400

Test Mode: WCDMA1900 CH9538

8. RADIATED SPURIOUS EMISSIONS

8.1 APPLIED PROCEDURES / LIMIT

Section	Test Item	Limit	Result
22.917 24.238	Radiated Spurious emissions	-13dBm	PASS

8.1.1 TEST PROCEDURE

1. The EUT was placed on an non-conductive rotating platform with 0.8 meter height in an anechoic chamber. The radiated spurious emissions from 30MHz to 10th harmonious of fundamental frequency were measured at 3m with a test antenna and a spectrum analyzer with RBW= 1MHz,VBW= 1MHz ,peak detector settings.
2. During the measurement, the EUT was enforced in maximum power and linked with a base station. All the spurious emissions (record as LVL) at 3m were measured by rotation of the turntable and the test antenna raised and lowered over a range from 1 to 4 meters in both horizontally and vertically polarized orientations.
3. Final spurious emissions levels were measured by substitution method according to TIA/EIA-603-C. The EUT was replaced by dipole antenna (for frequency below 1GHz) or Horn antenna (for frequency above 1GHz) at same location with same polarize of receiver antenna and then a known power of each measure frequency from S.G. was applied into the dipole antenna or Horn antenna through a Tx cable, and then recorded the maximum Analyzer reading through raised and lowered the test antenna. The correction factor (in dB) = S.G. - Tx Cable loss + Substitution antenna gain –Substitution antenna Loss(only for Dipole antenna) - Analyzer reading. Then final

   spurious emissions were calculated with the correction factor, EIRP= LVL + Correction factor and ERP = EIRP – 2.15

8.1.2 DEVIATION FROM STANDARD

No deviation.

8.1.3 TEST SETUP

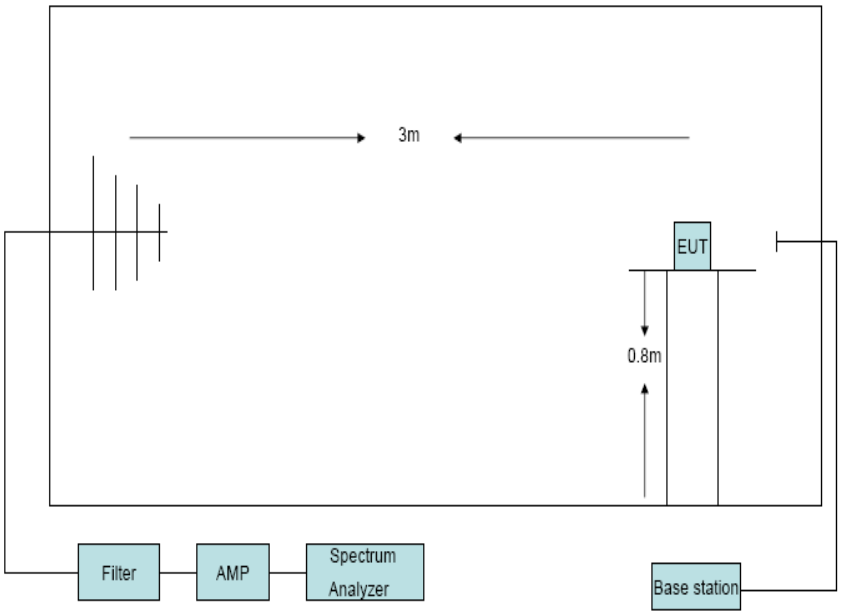

8.1.4 EUT OPERATION CONDITIONS

The EUT tested system was configured as the statements of 2.1 Unless otherwise a special operating condition is specified in the follows during the testing.

8.1.5 TEST RESULTS

NOTE: ALL MODE HAS BEEN TESTED, ONLY WORST DATA SHOWN IN THIS REPORT.

Test Mode：WCDMA 1900 CH9262						
Frequency (MHz)	Antenna polarization	LVL (dBm)	Correction factor(dB)	Result (ERP)(dBm)	Limit (dBm)	Margin (dB)
689.32	H	-57.26	-6.53	-63.79	-13.00	50.79
689.32	V	-56.75	-6.53	-63.28	-13.00	50.28
3704.8	H	-56.36	8.57	-47.79	-13.00	34.79
3704.8	V	-51.46	8.37	-43.09	-13.00	30.09
Test Mode：WCDMA 1900 CH9400						
3760	H	-54.12	8.75	-45.37	-13.00	32.37
3760	V	-50.66	8.55	-42.11	-13.00	29.11
Test mode: WCDMA 1900 CH9538						
3815.2	H	-52.51	8.94	-43.57	-13.00	30.57
3815.2	V	-53.49	8.72	-44.77	-13.00	31.77

9. BAND EDGE

9.1 APPLIED PROCEDURES / LIMIT

Section	Test Item	Limit	Result
22.917 (b) 24.238 (b)	Band edge	-13dBm	PASS

9.1.1 TEST PROCEDURE

1. The EUT was connected to Spectrum Analyzer and Base Station via power divider.
2. The band edges of low and high channels for the highest RF powers were measured.

9.1.2 DEVIATION FROM STANDARD

No deviation.

9.1.3 TEST SETUP

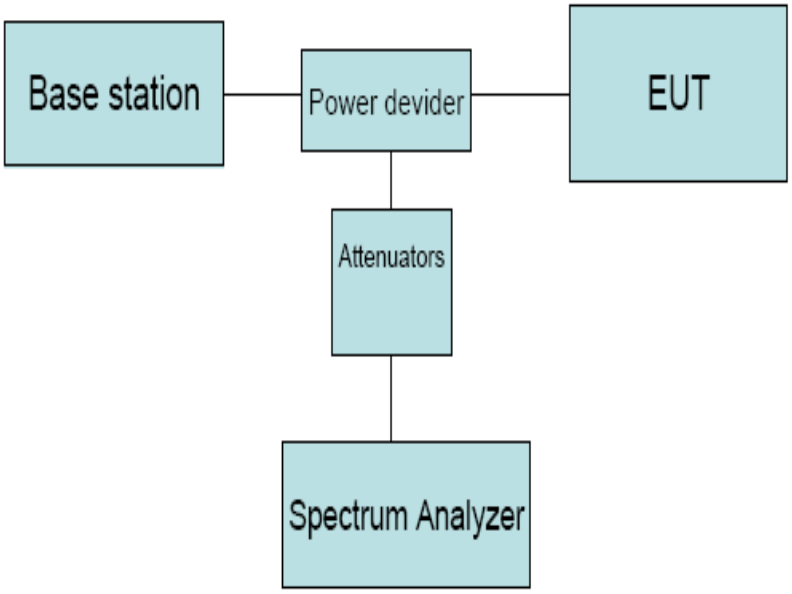

9.1.4 EUT OPERATION CONDITIONS

The EUT tested system was configured as the statements of 2.1 Unless otherwise a special operating condition is specified in the follows during the testing.

9.1.5 TEST RESULTS

NOTE: ALL MODE HAS BEEN TESTED, ONLY WORST DATA SHOWN IN THIS REPORT.

Test Mode: WCDMA1900

10. CONDUCTED EMISSION MEASUREMENT

10.1 POWER LINE CONDUCTED EMISSION Limits (Frequency Range 150KHz-30MHz)

FREQUENCY (MHz)	Class A (dBuV)		Class B (dBuV)		Standard
	Quasi-peak	Average	Quasi-peak	Average	
0.15 -0.5	79.00	66.00	66 - 56 *	56 - 46 *	CISPR
0.50 -5.0	73.00	60.00	56.00	46.00	CISPR
5.0 -30.0	73.00	60.00	60.00	50.00	CISPR

0.15 -0.5	79.00	66.00	66 - 56 *	56 - 46 *	FCC
0.50 -5.0	73.00	60.00	56.00	46.00	FCC
5.0 -30.0	73.00	60.00	60.00	50.00	FCC

Note:

(1) The tighter limit applies at the band edges.

(2) The limit of " * " marked band means the limitation decreases linearly with the logarithm of the frequency in the range.

The following table is the setting of the receiver

Receiver Parameters	Setting
Attenuation	10 dB
Start Frequency	0.15 MHz
Stop Frequency	30 MHz
IF Bandwidth	9 kHz

10.2 TEST PROCEDURE

a. The EUT was placed 0.8 meters from the horizontal ground plane with EUT being connected to the power mains through a line impedance stabilization network (LISN). All other support equipments powered from additional LISN(s). The LISN provide 50 Ohm/ 50uH of coupling impedance for the measuring instrument.
b. Interconnecting cables that hang closer than 40 cm to the ground plane shall be folded back and forth in the center forming a bundle 30 to 40 cm long.
c. I/O cables that are not connected to a peripheral shall be bundled in the center. The end of the cable may be terminated, if required, using the correct terminating impedance. The overall length shall not exceed 1 m.
d. LISN at least 80 cm from nearest part of EUT chassis.
e. For the actual test configuration, please refer to the related Item –EUT Test Photos.

10.3 DEVIATION FROM TEST STANDARD

No deviation

10.4 TEST SETUP

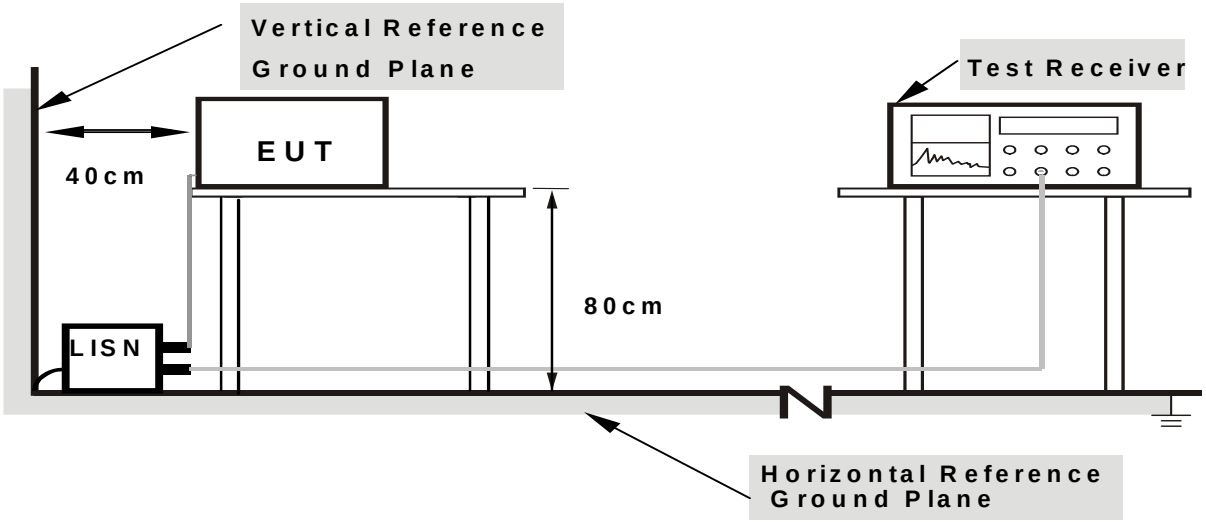

Note: 1.Support units were connected to second LISN.
2.Both of LISNs (AMN) are 80 cm from EUT and at least 80 from other units and other metal planes

10.5 EUT OPERATING CONDITIONS

The EUT was configured for testing in a typical fashion (as a customer would normally use it). The EUT has been programmed to continuously transmit during test. This operating condition was tested and used to collect the included data.

10.6 TEST RESULTS

EUT：	weePHONE	Model Name. ：	WP11
Temperature：	26 ℃	Relative Humidity：	54%
Pressure：	1010hPa	Phase：	L
Test Voltage ：	DC 5Vfrom adapter AC 120V/60Hz	Test Mode：	Mode 4

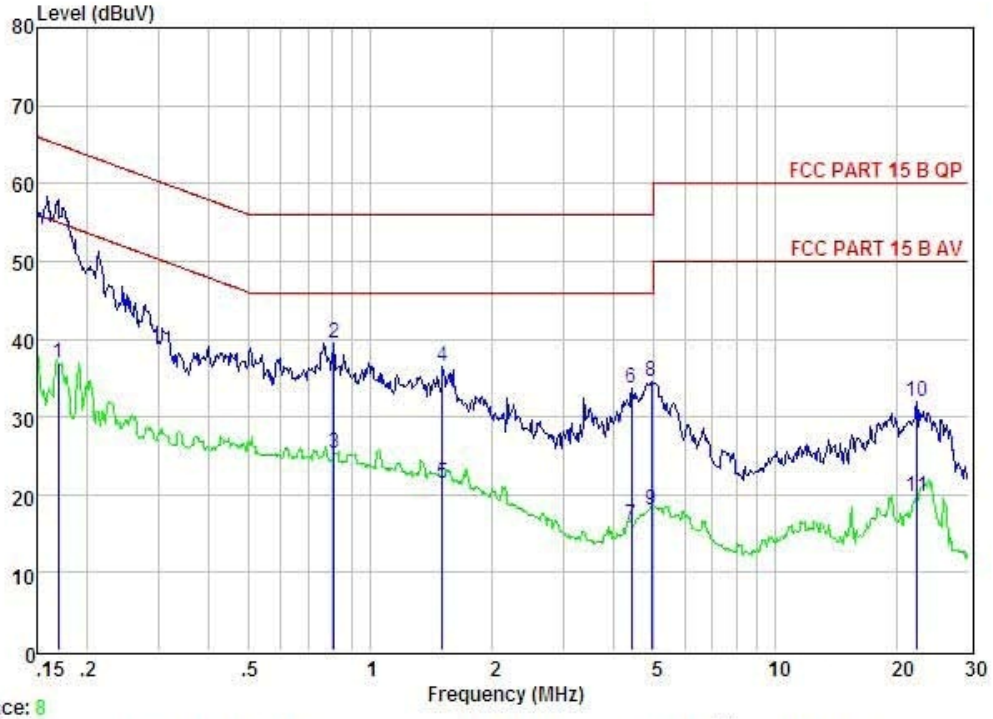

Trace: 8

Condition : FCC PART 15 B QP POL: LINE Temp:24 ℃ Hum:56 %

Item	Freq MHz	Read dBuV	LISN Factor dB	Preamp Factor dB	Cable Lose dB	Level dBuV	Limit dBuV	Margin dBuV	Remark
1	0.169	26.97	0.03	-9.72	0.10	36.82	54.99	-18.17	Average
2	0.813	29.73	0.02	-9.71	0.10	39.56	56.00	-16.44	QP
3	0.813	15.54	0.02	-9.71	0.10	25.37	46.00	-20.63	Average
4	1.503	26.65	0.05	-9.71	0.10	36.51	56.00	-19.49	QP
5	1.503	11.58	0.05	-9.71	0.10	21.44	46.00	-24.56	Average
6	4.407	23.75	0.09	-9.68	0.12	33.64	56.00	-22.36	QP
7	4.407	6.28	0.09	-9.68	0.12	16.17	46.00	-29.83	Average
8	4.952	24.72	0.10	-9.68	0.12	34.62	56.00	-21.38	QP
9	4.952	8.14	0.10	-9.68	0.12	18.04	46.00	-27.96	Average
10	22.298	21.53	0.40	-9.54	0.40	31.87	60.00	-28.13	QP
11	22.298	9.33	0.40	-9.54	0.40	19.67	50.00	-30.33	Average

Remarks: Level = Read + LISN Factor - Preamp Factor + Cable loss

EUT：	weePHONE	Model Name. ：	WP11
Temperature：	26 ℃	Relative Humidity：	54%
Pressure：	1010hPa	Phase：	N
Test Voltage ：	DC 5Vfrom adapter AC 120V/60Hz	Test Mode：	Mode 4

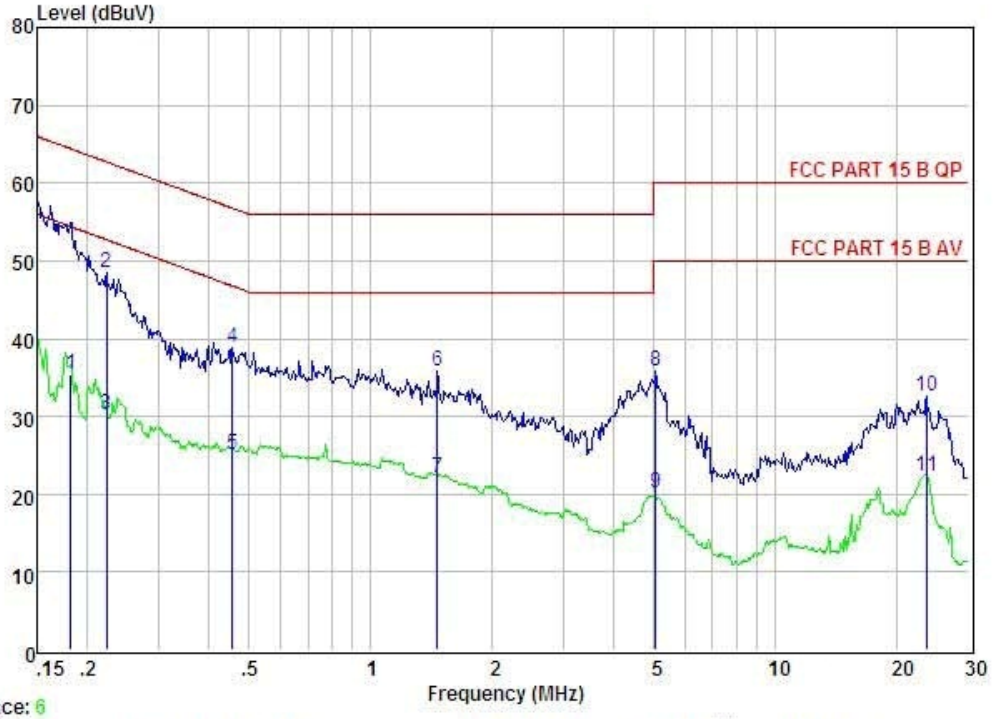

Trace: 6

Condition : FCC PART 15 B QP POL: NEUTRAL Temp:24 ℃ Hum:56 %

Item	Freq MHz	Read dBuV	LISN Factor dB	Preamp Factor dB	Cable Lose dB	Level dBuV	Limit dBuV	Margin dBuV	Remark
1	0.182	25.61	0.03	-9.72	0.10	35.46	54.42	-18.96	Average
2	0.223	38.63	0.03	-9.72	0.10	48.48	62.70	-14.22	QP
3	0.223	20.33	0.03	-9.72	0.10	30.18	52.70	-22.52	Average
4	0.456	28.93	0.03	-9.72	0.10	38.78	56.76	-17.98	QP
5	0.456	15.26	0.03	-9.72	0.10	25.11	46.76	-21.65	Average
6	1.464	25.86	0.05	-9.71	0.10	35.72	56.00	-20.28	QP
7	1.464	12.22	0.05	-9.71	0.10	22.08	46.00	-23.92	Average
8	5.058	25.85	0.10	-9.68	0.12	35.75	60.00	-24.25	QP
9	5.058	10.21	0.10	-9.68	0.12	20.11	50.00	-29.89	Average
10	23.636	22.15	0.43	-9.56	0.44	32.58	60.00	-27.42	QP
11	23.636	11.78	0.43	-9.56	0.44	22.21	50.00	-27.79	Average

Remarks: Level = Read + LISN Factor - Preamp Factor + Cable loss