S7G2 SK-S7G2 STARTER KIT

USER MANUAL

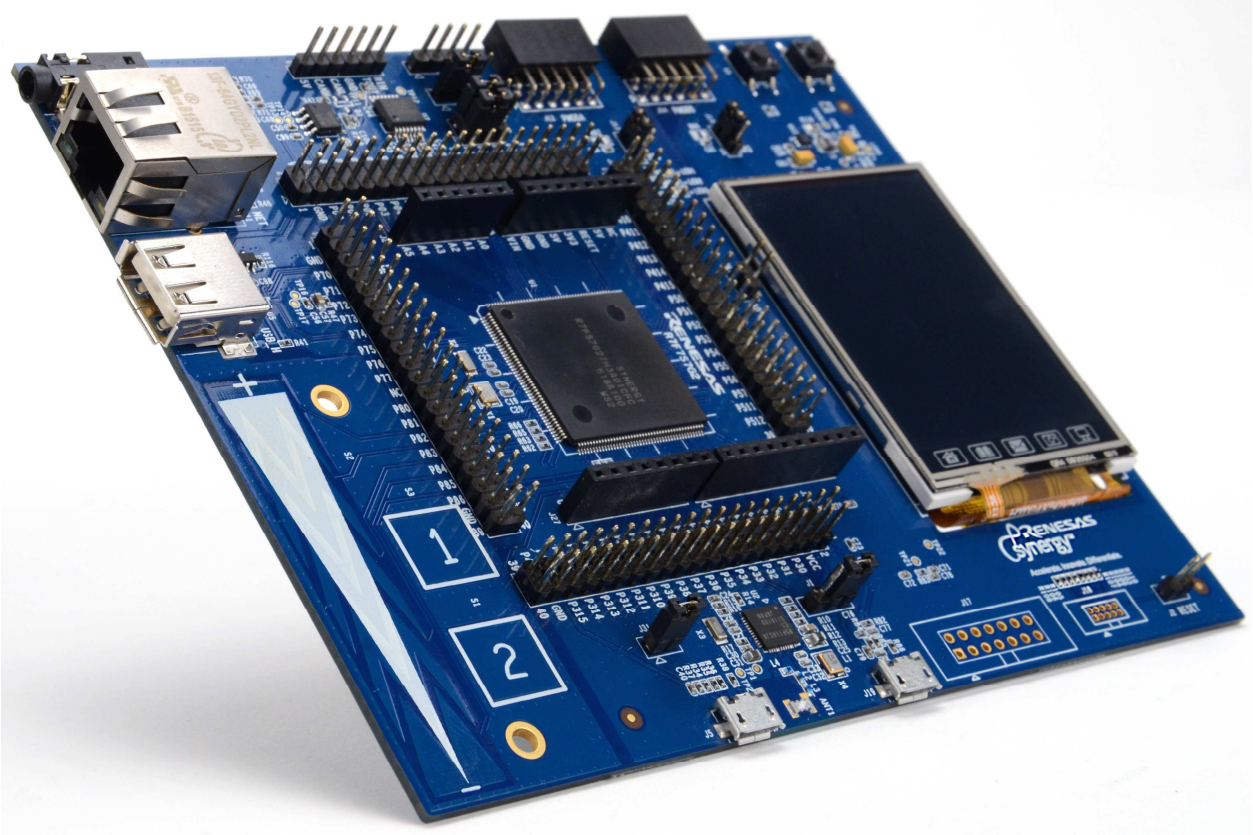

Disclaimer

By using this Synergy S7G2 SK-S7G2 Starter Kit (SK-S7G2) by Renesas, the user accepts the following terms. The SK-S7G2 is not guaranteed to be error free, and the entire risk as to the results and performance of the SK-S7G2 is assumed by the User. The SK-S7G2 is provided by Renesas on an "as is" basis without warranty of any kind whether express or implied, including but not limited to the implied warranties of satisfactory quality, fitness for a particular purpose, title, and non- infringement of intellectual property rights with regard to the SK-S7G2. Renesas expressly disclaims all such warranties. Renesas or its affiliates shall in no event be liable for any loss of profit, loss of data, loss of contract, loss of business, damage to reputation or goodwill, any economic loss, any reprogramming or recall costs (whether the foregoing losses are direct or indirect) nor shall Renesas or its affiliates be liable for any other direct or indirect special, incidental, or consequential damages arising out of or in relation to the use of this SK-S7G2, even if Renesas or its affiliates have been advised of the possibility of such damages.

FCC Part 15 Compliance

This device complies with part 15 of the FCC Rules. Operation is subject to the following two conditions: (1) This device may not cause harmful interference, and (2) this device must accept any interference received, including interference that may cause undesired operation.

This equipment has been tested and found to comply with the limits for a Class B digital device, pursuant to part 15 of the FCC Rules. These limits are designed to provide reasonable protection against harmful interference in a residential installation. This equipment generates, uses and can radiate radio frequency energy and, if not installed and used in accordance with the instructions, may cause harmful interference to radio communications. However, there is no guarantee that interference will not occur in a particular installation. If this equipment does cause harmful interference to radio or television reception, which can be determined by turning the equipment off and on, the user is encouraged to try to correct the interference by one or more of the following measures:

-- Reorient or relocate the receiving antenna.

-- Increase the separation between the equipment and receiver.

-- Connect the equipment into an outlet on a circuit different from that to which the receiver is connected.

-- Consult the dealer or an experienced radio/TV technician for help.

The FCC requires the user to be notified that any changes or modifications made to this device that are not expressly approved by Purple Communications, Inc, may void the user's authority to operate the equipment.

Industry Canada Compliance

This device complies with Industry Canada license-exempt RSS standard(s). Operation is subject to the following two conditions:

1. This device may not cause harmful interference;
2. This device must accept any interference received, including interference that may cause undesired operation of the device.

Cet appareil est conforme à Industrie Canada une licence standard RSS exonérés (s). Son fonctionnement est soumis aux deux conditions suivantes:

1. Cet appareil ne doit pas provoquer d'interférences

2. Cet appareil doit accepter toute interférence reçue, y compris les interférences pouvant provoquer un fonctionnement indésirable de l'appareil.

Precautions

This Renesas SK-S7G2 is only intended for use in a laboratory environment under ambient temperature and humidity conditions. A safe separation distance should be used between this and sensitive equipment. Its use outside the laboratory, classroom, study area, or similar such area invalidates conformity with the protection requirements of the Electromagnetic Compatibility Directive and could lead to prosecution.

The product generates, uses, and can radiate radio frequency energy and may cause harmful interference to radio communications. However, there is no guarantee that interference will not occur in a particular installation. If this equipment causes harmful interference to radio or television reception, which can be determined by turning the equipment off or on, you are encouraged to try to correct the interference by one or more of the following measures;

- Ensure attached cables do not lie across the equipment
- Reorient the receiving antenna
- Increase the distance between the equipment and the receiver
- Connect the equipment into an outlet on a circuit different from that which the receiver is connected
- Power down the equipment when not in use
- Consult the dealer or an experienced radio/TV technician for help

NOTE: It is recommended that wherever possible shielded interface cables are used.

The product is potentially susceptible to certain EMC phenomena. To mitigate against them it is recommended that the following measures be undertaken;

- The user is advised that mobile phones should not be used within 10m of the product when in use.
- The user is advised to take ESD precautions when handling the equipment.

The Renesas SK-S7G2 does not represent and ideal reference design for an end product and does not fulfill the regulatory standards for an end product.

Table of Contents

Chapter 1 - Preface 1
Chapter 2 - Overview and Purpose 2
2.1 Purpose 2
2.2 In The Box 2
2.3 Block Diagram 3
2.4 Hardware Features 3
2.5 Resources 3
Chapter 3 - Getting Started 4
Chapter 4 – Power Supply Requirements 5
4.1 Power Supply 5
4.2 Power-Up Behavior 5
4.3 Microcontroller Current 5
Chapter 5 – Board Components 7
5.1 On Board J-Link Debugger 7
5.2 LCD 7
5.3 Ethernet 8
5.4 PMOD 8
5.5 CAN, RS-232/485 8
5.6 USB Device Port 9
5.7 USB Host Port 9
5.8 Bluetooth 10
5.9 Cap Touch Interface 10
5.10 Audio 10
5.11 User Buttons and LEDs 11
5.12 QSPI Flash 11
5.12 Arduino Shield Interface 11
5.13 Breakout Headers 12
Chapter 6 – Board Layout 13
Chapter 7 – Configuration 14
7.1 RS-232 Transceiver Configuration 14
Chapter 8 – Connectivity 16
8.1 USB Host Port 16
8.2 USB Device Port 16
8.3 Ethernet 16
8.4 LCD 17
8.4 PMOD 18
8.4 JTAG/SWD 19

8.4 UART & CAN 19
Chapter 9 – Appendix A 20
9.1 Pin Connections 20
Chapter 10 - Post Production Modifications 24
Chapter 11 - Additional Information 25

Chapter 1 - Preface

Cautions

This document may be, wholly or partially, subject to change without notice.

All rights reserved. Duplication of this document, either in whole or part is prohibited without the written permission of Renesas Solutions Corporation.

Trademarks

*All brand or product names used in this manual are trademarks or registered trademarks of their respective companies or organizations.

Copyright

© 2015 Renesas Electronics America, Inc. All rights reserved.
© 2015 Renesas Electronics Europe Ltd. All rights reserved.
© 2015 Renesas Electronics Corporation. All rights reserved.
© 2015 Renesas Solutions Corporation. All rights reserved.

Website: http://www.renesas.com/

Glossary

CPU	Central Processing Unit	HMI	Human Machine Interface
GUI	Graphical User Interface	USB	Universal Serial Bus

Chapter 2 - Overview and Purpose

2.1 Purpose

The SK-S7G2 is a Starter Kit for the Renesas Synergy S7G2 microcontroller in a 176 pin LQFP package. The board provides easy-to-access interfaces to the peripherals of the S7G2 microcontroller for application development.

The SK-S7G2 board includes four header connectors for direct access to the S7G2 microcontroller I/O pins. Additionally, the board contains connectors for USB, Ethernet, RS-232/485, CAN, and JTAG J-Link connectors.

The SK-S7G2 board includes a 2.4” QVGA (240 x 320) TFT display with resistive-touch screen.

The SK-S7G2 kit is supported by the e2studio Integrated Solution Development Environment (ISDE) from Renesas.

The SK-S7G2 kit is a Starter Kit, designed to demonstrate the main features of the Synergy Platform using the S7 device. It is an initial evaluation platform to determine which Development Kit is appropriate for further development of the customer’s product.

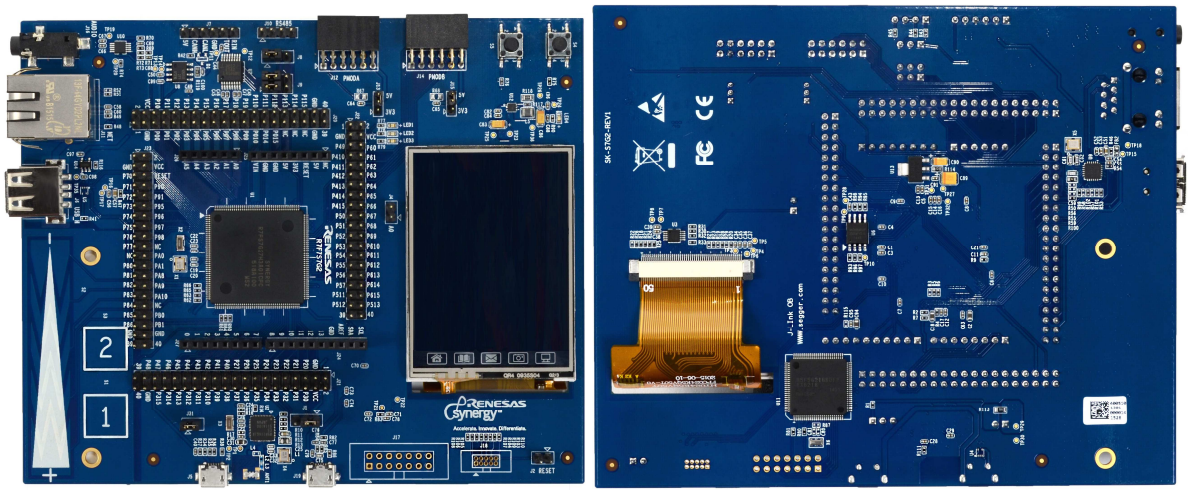

Figure 1: SK-S7G2 Kit board

2.2 In The Box

The following components are included in the SK-S7G2 kit:

- SK-S7G2 board
- 3 ft USB type-A to Micro-B cable for debugger and power connection
- Quick Start Guide

2.3 Block Diagram

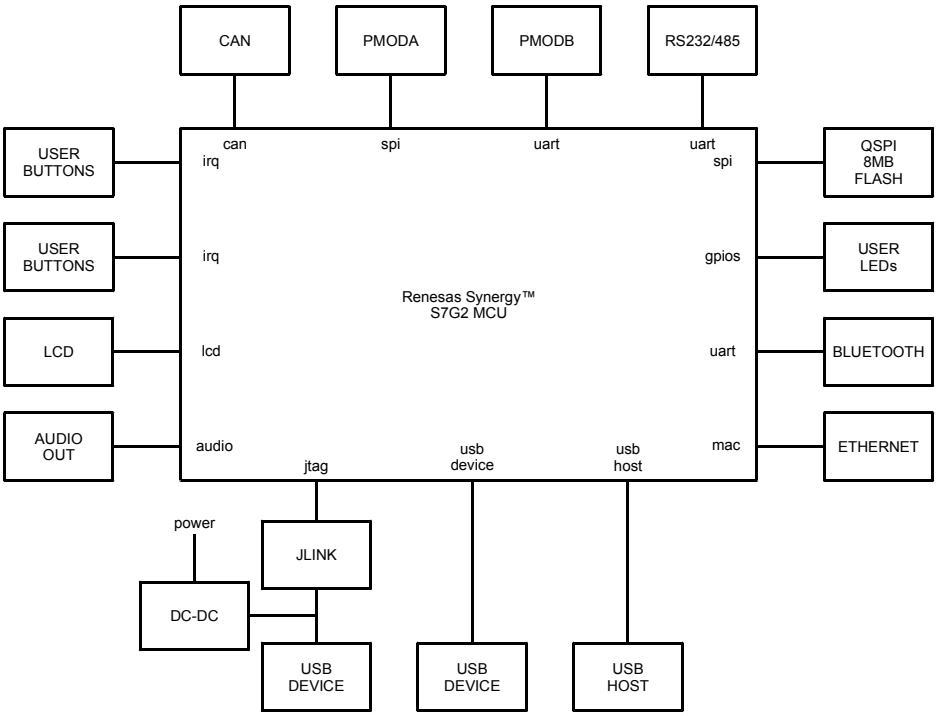

Figure 2: SK-S7G2 Kit block diagram

2.4 Hardware Features

The SK-S7G2 kit contains the following hardware characteristics:

- S7G2 microprocessor with 176 LQFP package
- Four 2-pin-row connectors provide access to all S7G2 microprocessor signals
- Low cost QVGA TFT touch screen
- Three user LEDs
- Arduino Uno Shield compatible socket
- Two mechanical switches connected directly to microprocessor interrupt pins
- Two capacitive touch-buttons
- One capacitive slider
- Audio output
- QSPI memory (8MB)
- SPI, I2C, CAN, and SCI interface
- Bluetooth Smart (Low Energy) using a Renesas RL78/G1D Bluetooth Smart device

2.5 Resources

The following documents are related to S7G2 and SK-S7G2 hardware:

- SK-S7G2 Quick Start Guide
- SK-S7G2 Board Schematics in PDF format
- SK-S7G2 Board Design Files in Altium format
- S7G2 User's Manual: Hardware
- S7G2 Datasheet

For programming the SK-S7G2 Kit, refer to the following documents:

- SSP User's Manual
- e2 studio ISDE User's Manual

Chapter 3 - Getting Started

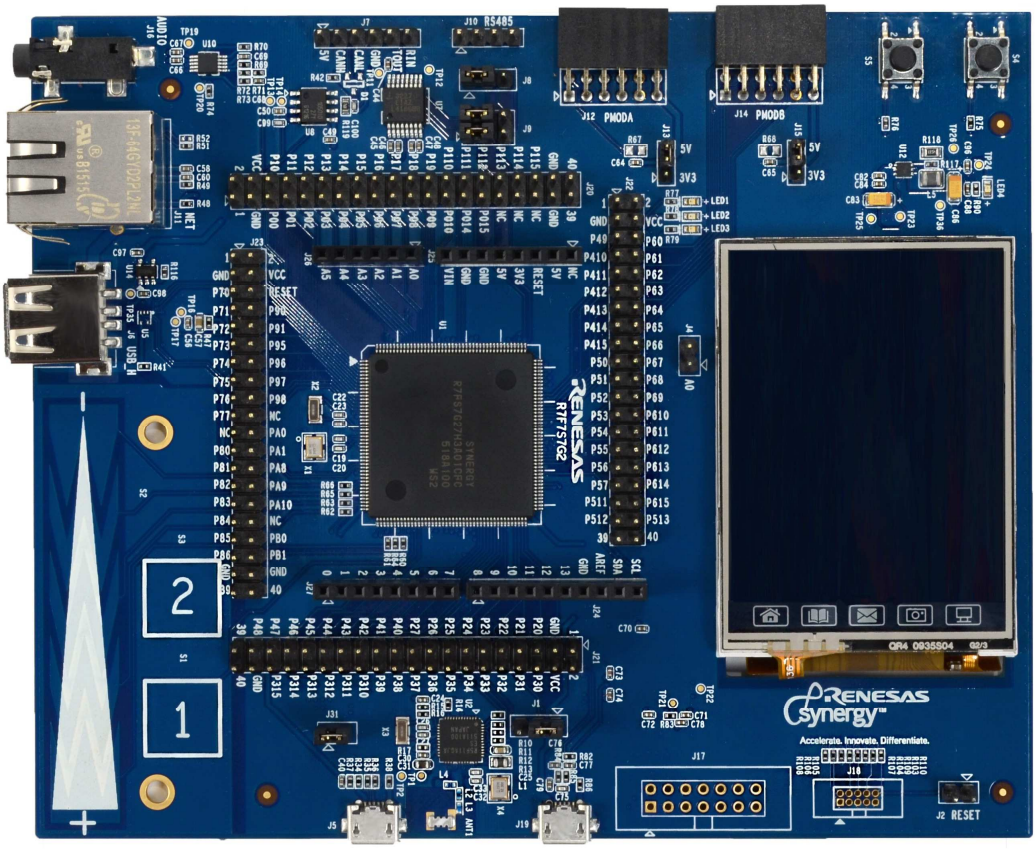

To start working with the SK-S7G2 Kit, see the Quick Start Guide included in the Kit. The Quick Start Guide provides instructions on how to download the required software tools and on how to use the tools to run a simple demonstration application, Blinky, on the board.

Running the demonstration application successfully ensures that the kit is functional and that the basic components are connected properly.

Chapter 4 – Power Supply Requirements

4.1 Power Supply

Power is supplied to the SK-S7G2 board through the debug USB connector (J19). The SK-S7G2 requires 5V applied on this interface (USB standard). Once power is supplied, the power supply indicator LED4 (green) will light up.

4.2 Power-Up Behavior

When power is applied to the SK-S7G2, the power-on reset (POR) monitor of the S7G2 microcontroller resets the device. After reset, the memory from which the S7G2 microcontroller will start program execution depends on the J1 jumper. If it is in position 1-2 (default), then it will start execution from internal Flash (ROM), and if it is in 2-3 position, it will start execution in USB program mode, which allows the user to load a program directly to the internal microcontroller flash via the USB device interface.

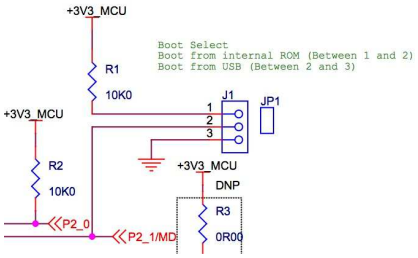

Figure 3: CPU startup mode

The microcontroller can be forced to reset even while powered via the J2 jumper.

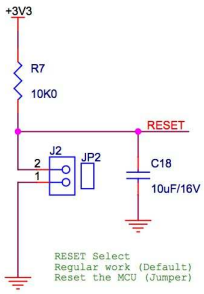

Figure 4: CPU reset control

4.3 Microcontroller Current

Power consumption of the S7G2 microcontroller can be measured for the digital power supply of the microcontroller simply by removing the J31 jumper and measuring the current draw across it.

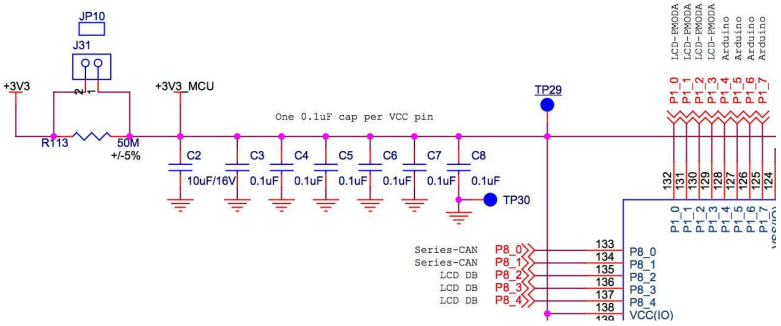

Figure 5: Measuring digital current consumption on S7G2 microcontroller

Power consumption for the analog supply of the S7G2 microcontroller requires removing resistor R114 and measuring current across it.

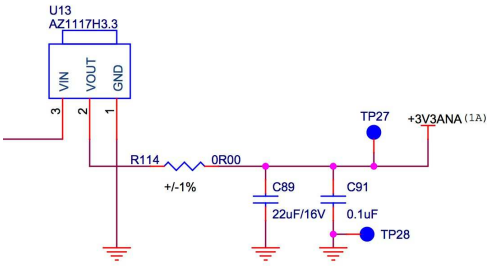

Figure 6: Measuring analog current consumption on S7G2 microcontroller

Chapter 5 – Board Components

The main board components, interfaces, and configuration items are listed below.

5.1 On Board J-Link Debugger

The SK-S7G2 board features a SEGGER J-Link On-Board debugger, accessible through J19 USB connector. Alternatively, the onboard debugger can be bypassed by removing resistors R107, R108, R109, and R110. Once removed, JTAG/SWD debugging can then be done via the J18 header.

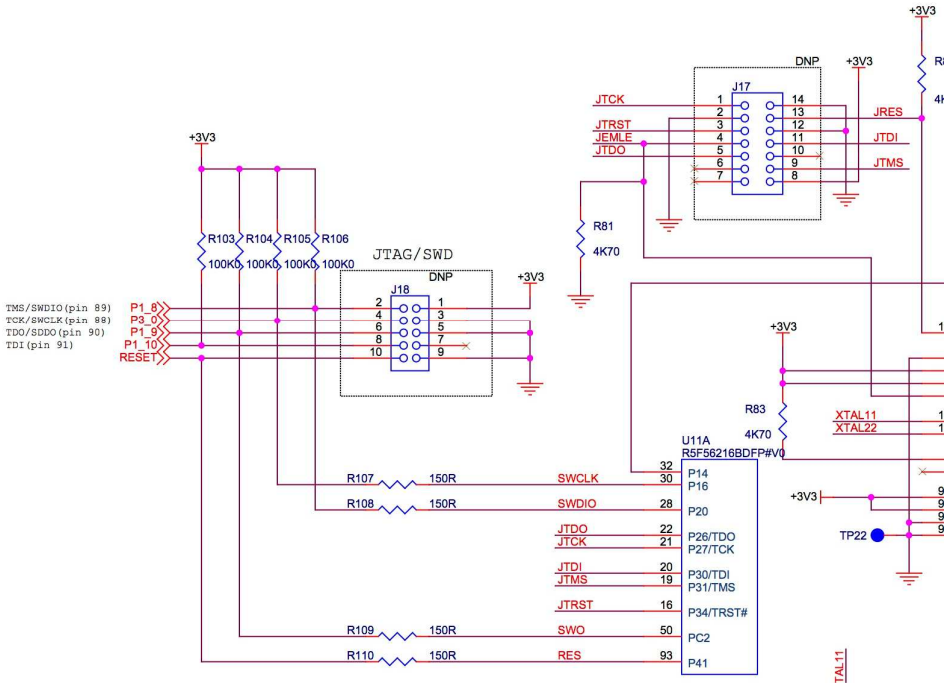

Figure 7: On/Off-board JTAG debugging

5.2 LCD

The SK-S7G2 kit contains a 2.4” LCD Display with touch screen interface. The LCD is connected directly to the LCD interface of the S7G2 microcontroller. The LCD display is a HaoRan HT024K5QV50T, which uses an Ilitek ILI9341V driver IC. The mode of operation of the Ilitek driver is selected with R19, R20, R22, R23, R26, R27, R28 and R29, and the default mode of operation is the 4-wire, 8-bit serial interface.

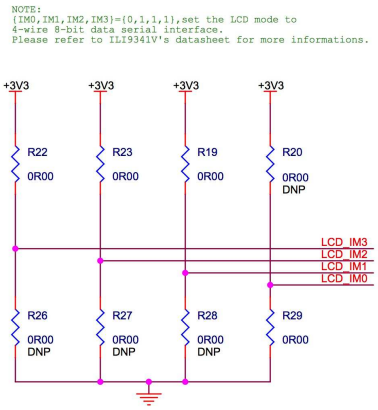

Figure 8: LCD interface mode selection

The touch-screen is sensed via a Semtech SX8656 resistive touch-screen controller, connected to the S7G2 microcontroller via I2C bus.

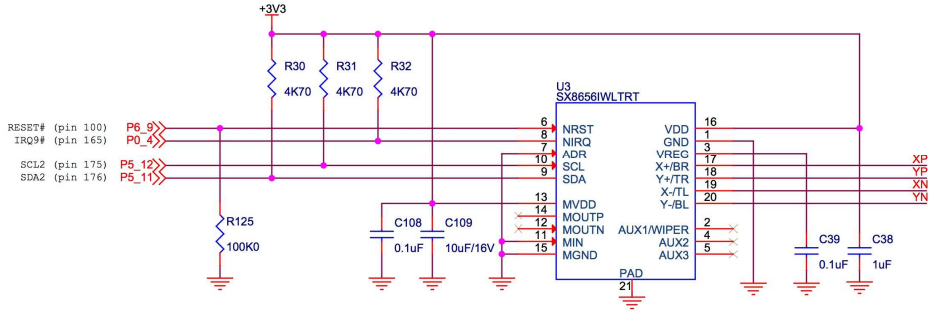

Figure 9: Touch-screen controller

5.3 Ethernet

The SK-S7G2 kit includes a Micrel KSZ8081 10/100 Ethernet physical interface. Ethernet connection is done via the RJ-45 standard connector J11.

5.4 PMOD

The SK-S7G2 kit includes two standard PMOD interfaces. The first, PMODA, available on the J12 connector, exposes an SPI interface, three GPIO lines and an interrupt line to the S7G2 microcontroller.

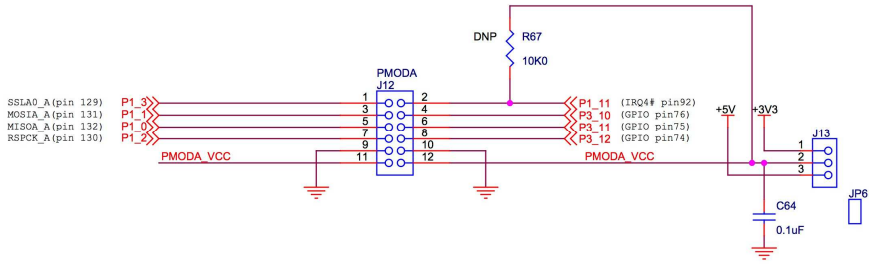

Figure 10: PMODA interface

The second, PMODB, available on the J14 connector, exposes a UART, three GPIO lines and an interrupt line to the S7G2 microcontroller.

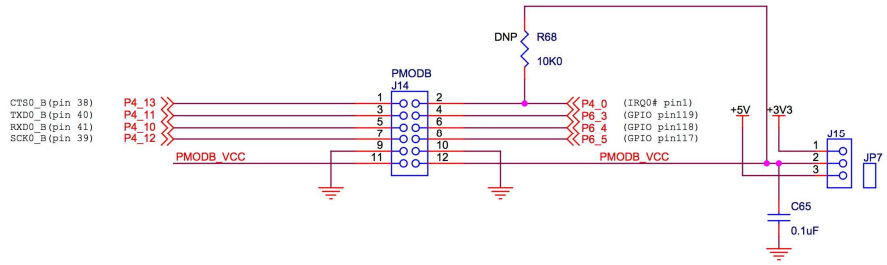

Figure 11: PMODB interface

Both PMOD interfaces can output either 5V or 3.3V, depending on the position of the J13 and J15 jumpers.

5.5 CAN, RS-232/485

The SK-S7G2 kit contains a UART interface (either RS-232 or RS-485) and a CAN interface. The CAN interface is exposed on connector J7, while the UART interface is available on connector J7 in RS-232 format (jumper J9 has to be in positions 1-3 and 2-4), or in raw TTL format in connector J10 (jumper J9 has to be in positions 3-5, and 4-6) to be connected to an external RS-485 converter.

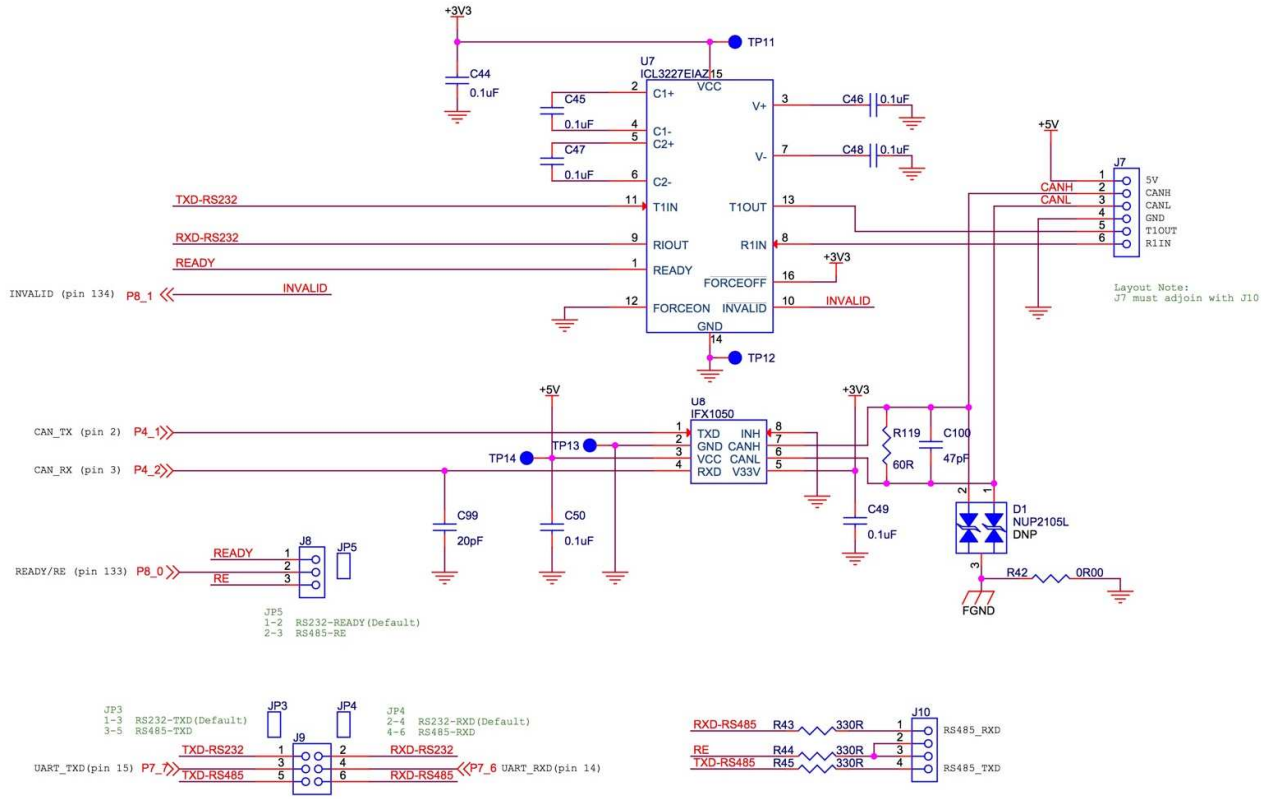

Figure 12: RS-232/485 and CAN interface

5.6 USB Device Port

The SK-S7G2 kit is equipped with a USB Full-Speed (12Mbps) device port on J5. The SK-S7G2 cannot be powered via this interface (power still needs to be applied via the USB device port J19) but connection to this port can be detected since the power pin of this port is connected to a microcontroller GPIO.

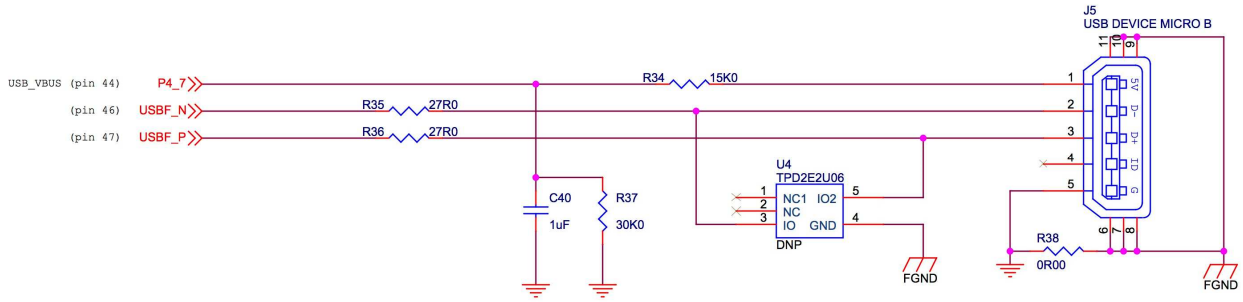

Figure 13: USB device port

5.7 USB Host Port

The SK-S7G2 kit is equipped with a USB High-Speed (480Mbps) host port on J6. This host port can source current to devices connected to it, and over consumption conditions on devices can be detected.

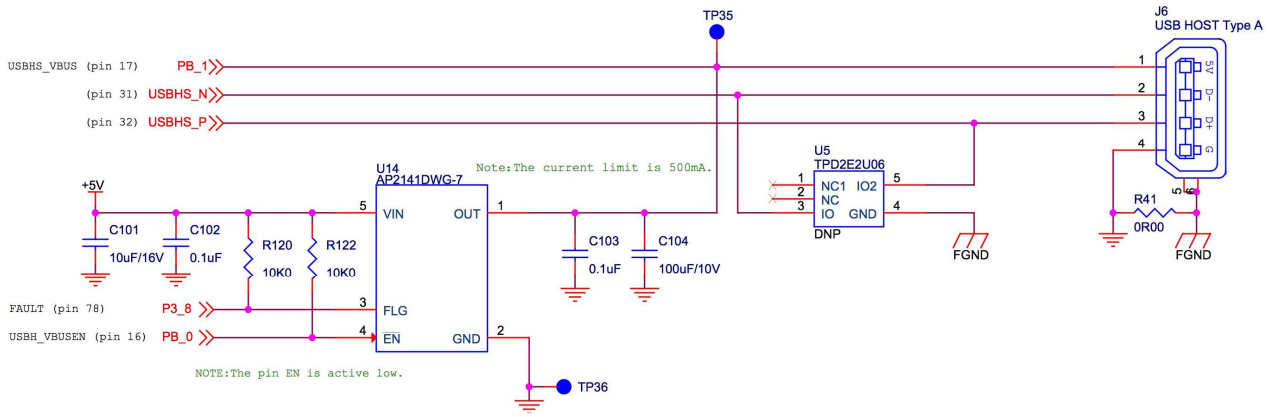

Figure 14: USB host port

5.8 Bluetooth

The SK-S7G2 kit contains an on-board Bluetooth/BLE interface. This interface is implemented via a Renesas RL/78 Bluetooth SMART MCU. Communication with this Bluetooth Low Energy (BLE) interface is done via a serial communication interface (SCI) channel of the S7G2 MCU. Additionally, the S7G2 MCU can power down the Bluetooth interface via a GPIO.

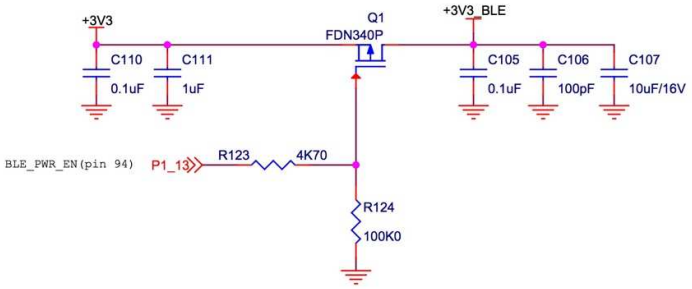

Figure 15: BLE interface power control

5.9 Cap Touch Interface

The SK-S7G2 kit contains two capacitive buttons (S1 and S2) and one slider (S3) connected to the capacitive touch-sensing unit (CTSU) of the S7G2 microcontroller.

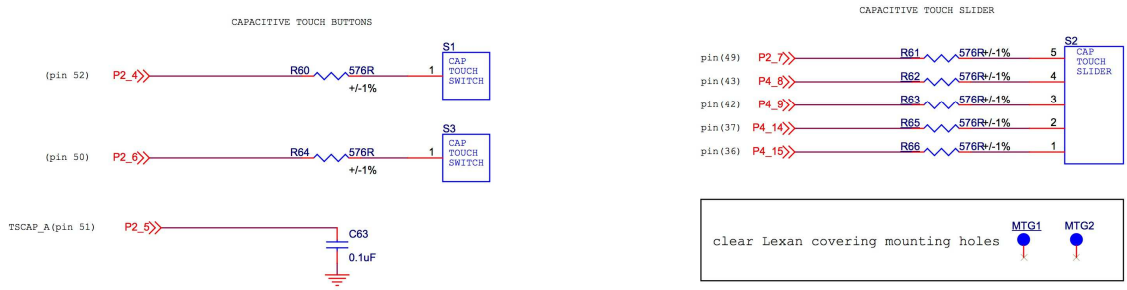

Figure 16: Capacitive touch buttons and slider

5.10 Audio

The SK-S7G2 kit contains an amplified mono audio output on a standard 3.5mm audio jack J16. The audio is generated with the S7G2 D/A converter on output DA0, and the amplification gain can be changed by modifying resistor pairs R70/R71 and R73/R72.

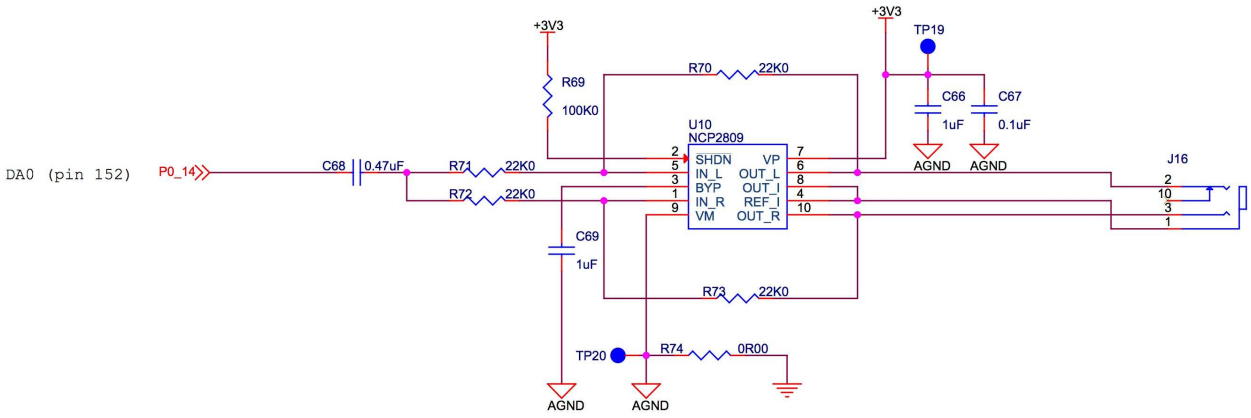

Figure 17: Audio output

5.11 User Buttons and LEDs

The SK-S7G2 kit includes two user buttons directly wired to interrupt pins of the S7G2 microcontroller, as well as three generic user LEDs connected to microcontroller GPIO pins.

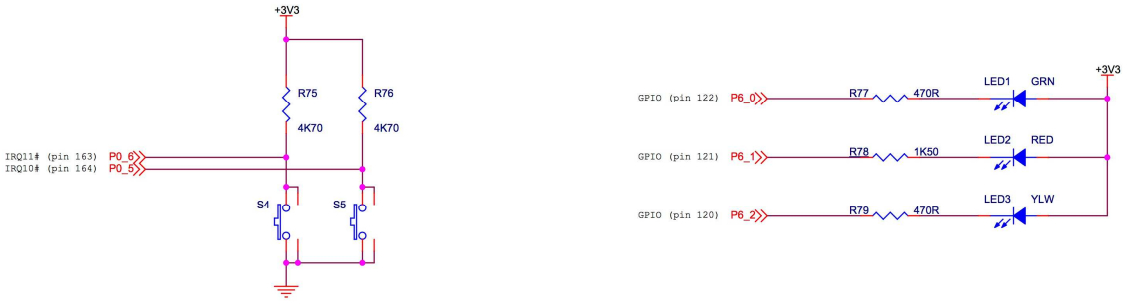

Figure 18: User buttons and LEDs

5.12 QSPI Flash

The SK-S7G2 kit includes one 64Mb (8MB) QSPI Flash connected to the QSPI interface of the microcontroller.

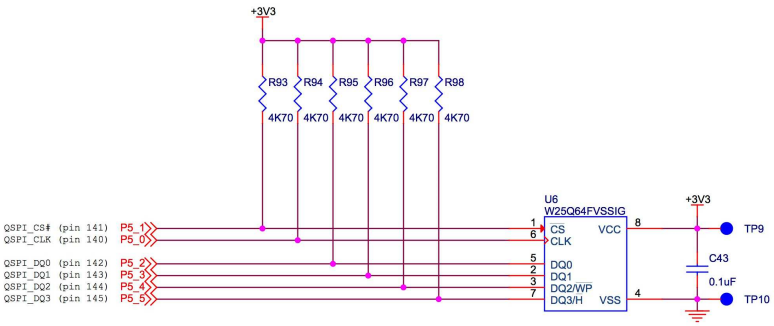

Figure 19: QSPI flash

5.12 Arduino Shield Interface

The SK-S7G2 kit includes one Arduino Shield compatible interface, so that Arduino Shield boards can expand the SK-S7G2 functionality. The Arduino Shield interface is implemented with the J24, J25, J26, and J27 connectors.

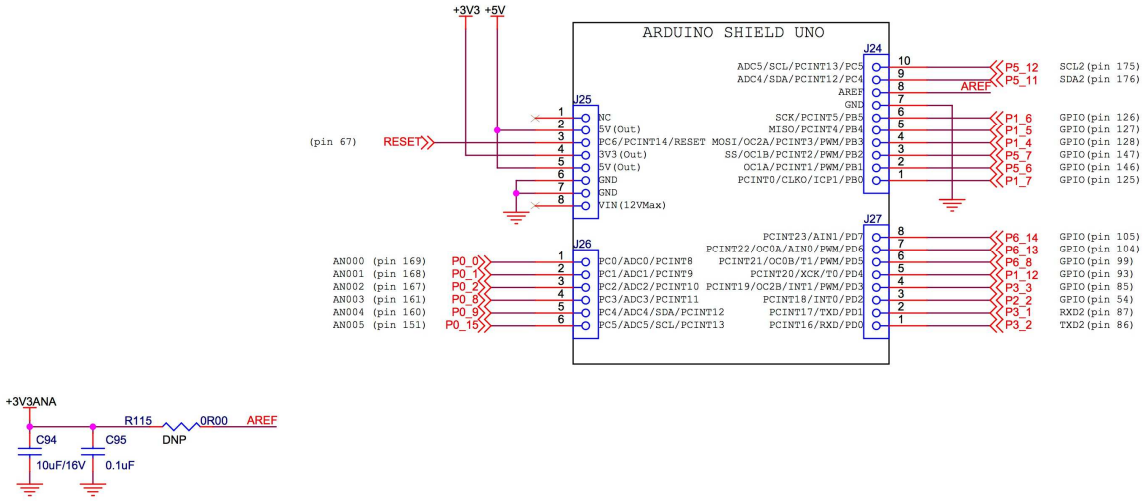

Figure 20: Arduino Shield interface

5.13 Breakout Headers

All of the S7G2 microcontroller I/O pins are accessible via four double row 2.54mm (0.1”) pitch breakout headers (J20 through J23).

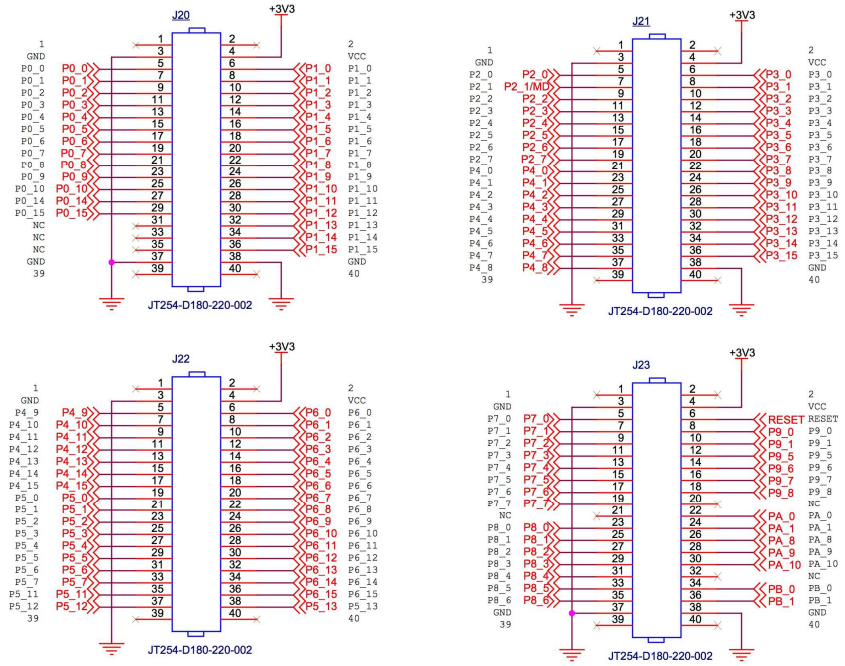

Figure 21: S7G2 microcontroller breakout headers

Chapter 6 – Board Layout

The SK-S7G2 kit board measures 145mm x 120mm and the following diagram shows the location of all the relevant board components described in the prior section.

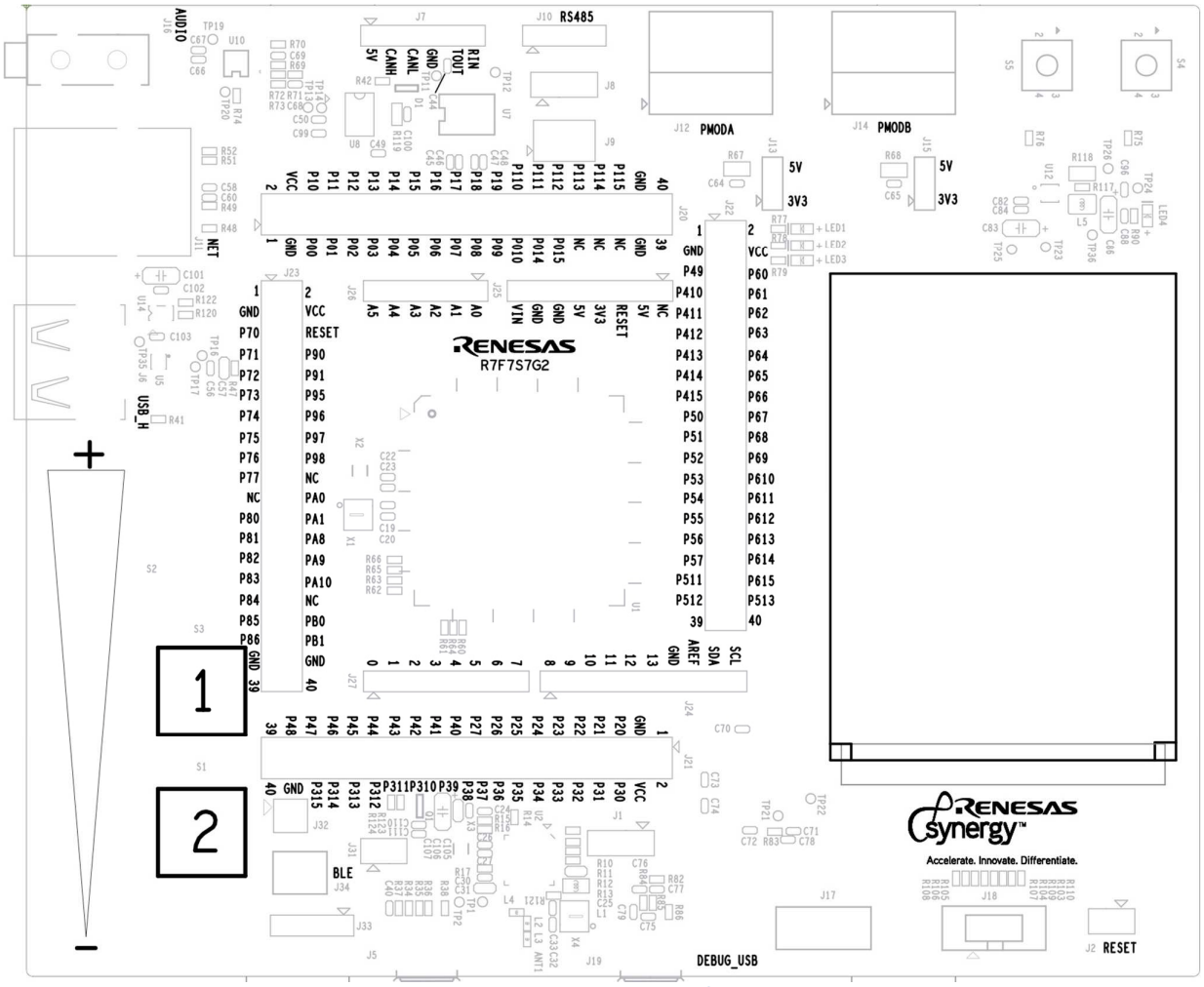

Figure 22: SK-S7G2 component placement

Chapter 7 – Configuration

The SK-S7G2 kit has several configuration options. These are set via jumpers. The following table lists the different jumpers and their positions.

Table 1: SK-S7G2 configuration jumpers

JUMPER	FUNCTION
J1	S7G2 boot selection. If in position 1-2 (default), the MCU boots in normal mode (from its ROM), if it is set on the 2-3 position, the MCU boots in USB programming mode, which allows programming the MCU flash via the USB port.
J2	S7G2 MCU reset. If jumper is set, MCU is reset, if open, MCU reset is released.
J8	RS-232 transmit ready/RS-485 receive enable selector jumper. In position 1-2 (default) the RS-232 driver's transmit ready signal (which indicates that the transmit voltages are appropriate) is connected to an MCU GPIO signal. In position 2-3, the (external) RS-485 driver's receive enable is connected to the same MCU GPIO signal.
J9	RS-232/485 mode selection jumper. In position 1-3 & 2-4 (default), the MCU's SCI3 port is connected to the RS-232 driver (which is exposed on the J7 port). In the 3-5 & 4-6 position, the MCU's SCI3 port is connected to the RS-485 port (J10) for an off-board driver.
J13	PMODA 3.3V/5V output selection. If set on the position labeled "5V", then 5V are provided in the PMODA connector. If set on the "3V3" labeled position, then 3.3V are provided in the PMODA interface.
J15	PMODB 3.3V/5V output selection. If set on the position labeled "5V", then 5V are provided in the PMODB connector. If set on the "3V3" labeled position, then 3.3V are provided in the PMODB interface.
J31	Power measurement jumper for S7G2. If installed, (digital) MCU current goes through the jumper. If removed, the (digital) MCU current consumption will go through an ammeter connected across pins 1 and 2 of J31.
J32	Programming jumper for RL/78 Bluetooth SMART MCU, selects programming source pin from S7G2 MCU. Only used for upgrading software on RL/78 MCU, not in normal operation.
J33 / J34	Programming header for RL/78 Bluetooth SMART MCU. Only used for upgrading software on RL/78 MCU, not in normal operation.

7.1 RS-232 Transceiver Configuration

The SK-S7G2 kit exposes the S7G2 MCU's SCI (Serial Communication Interface) port 3 via three different electrical interfaces: RS-232, (external) RS-485, and the MCU breakout headers. The following table summarizes the configuration alternatives for this port.

Table 2: Configuration options for RS-232/RS-485 port

OPTION	J8	J9
RS-232 on J7	1-2	1-3 & 2-4
RS-485 on J10 (external converter)	2-3	3-5 & 4-6

TTL interface on MCU breakout headers J20-J23	removed	removed

Chapter 8 – Connectivity

The following sections describe in detail the interfaces available on the SK-S7G2 kit, detailing the MCU resources utilized in each.

8.1 USB Host Port

The SK-S7G2 kit includes one USB Host/High-Speed port (J6). This port supplies current to devices connected to it via a current limited power switch (U14). The power being output can be monitored via an S7G2 microcontroller GPIO pin and enabled via another GPIO pin. The following table shows the S7G2 functions used for the USB Host port.

Table 3: USB host port functions

S7G2 Pin	Function name
USBHS_DM	USBHS_N
USBHS_DP	USBHS_P
PB01	USBHS_VBUS (monitor)
PB00	USBH_VBUSEN
P308	FAULT (monitor)

8.2 USB Device Port

The SK-S7G2 kit includes one USB Device/Full-Speed port (J5). Detection of USB connection can be done by monitoring the status of the power pin of the USB device connector via its connection to a GPIO pin on the S7G2 microcontroller. The following table shows the S7G2 functions used for the USB device port.

Note: only connect a host to this device port when the board is powered.

Table 4: USB device port functions

S7G2 Pin	Function name
USB_DM	USBF_N
UDB_DP	USBF_P
P407	USB_VBUS (monitor)

8.3 Ethernet

The SK-S7G2 kit includes on RJ45 Ethernet connector to the on-board Ethernet PHY. The following table shows the pins of the S7G2 microcontroller used on the SK-S7G2 board when connected as a RMII interface to the PHY. In addition, interrupt IRQ14 is connected to the Ethernet PHY.

The Ethernet PHY is clocked by its own oscillator based on a 25.000 MHz crystal (X5).

Since the Ethernet connector (J11) is connected to the S7G2 microcontroller through other components, only the functions used by the Ethernet module on the S7G2 are shown in the table below.

Table 5: Ethernet functions

S7G2 Pin	Function name
P010	ETH_IRQ14#

P806	ETH_RESET#
P403	ETH_MDC
P404	ETH_MDIO
P705	ETH_CRS_DV
P405	ETH_TXD_EN
P700	ETH_TDX0
P406	ETH_TXD1
P702	ETH_RXD0
P703	ETH_RXD1
P704	ETH_RX_ER
P701	ETH (Reference Clock)

8.4 LCD

The SK-S7G2 kit includes a 240x320 QVGA LCD display with touch screen interface. This display is connected directly to the S7G2's display port, and via a touchscreen controller IC to the display's touchscreen interface. The tables below list the functions used by the LCD display and touchscreen controller on the S7G2.

Table 6: LCD functions (J3)

S7G2 Pin	Function name
P610	LCD_RESET
P314	LCD_VSYNC
P313	LCD_HSYNC
P900	LCD_CLK_B
P315	LCD_Data_Enable
P901	LCD_D15
P908	LCD_D14
P907	LCD_D13
P906	LCD_D12
P905	LCD_D11
P615	LCD_D10
PA08	LCD_D9
PA09	LCD_D8
PA10	LCD_D7
PA01	LCD_D6
PA00	LCD_D5
P607	LCD_D4
P606	LCD_D3
P802	LCD_D2

P803	LCD_D1
P804	LCD_D0
P103	LCD_CS
P102	LCD_SCK
P115	LCD_WR
P114	LCD_RD
P101	LCD_MOSI
P100	LCD_MISO

Table 7: LCD touchscreen functions

S7G2 Pin	Function name
P609	RESET#
P004	IRQ9#
P512	SCL2
P511	SDA2

8.4 PMOD

The SK-S7G2 kit contains two PMOD ports, a PMODA port (J12), and a PMODB (J14). Both of them can output either 3.3V or 5V supply, configurable via jumpers. The following table shows the S7G2 functions used for these ports.

Table 8: PMODA port functions

S7G2 Pin	Function name
P103	SSLA0_A
P101	MOSIA_A
P100	MISOA_A
P102	RSPCK_A
P111	IRQ4#
P310	GPIO (PMOD pin 4)
P311	GPIO (PMOD pin 6)
P312	GPIO (PMOD pin 8)

Table 9: PMODB port functions

S7G2 Pin	Function name
P413	CTS0_B
P411	TXD0_B
P410	RXD0_B
P412	SCK0_B

P400	IRQ0#
P603	GPIO (PMOD pin 4)
P604	GPIO (PMOD pin 6)
P605	GPIO (PMOD pin 8)

8.4 JTAG/SWD

The SK-S7G2 kit includes several alternatives for JTAG emulation/debugging. It includes an onboard SEGGER J-Link JTAG debugger, accessible via the debugging/power USB port (J19). But it also includes direct access to the S7G2 microcontroller JTAG/SWD port via a connector (J18). To enable the direct access connector, the resistors that connect the onboard J-Link debugger with the MCU have to be removed (R107, R108, R109, and R110). The following table shows the S7G2 functions connected to the direct access JTAG/SWD connector.

Table 10: JTAG/SWD functions

S7G2 Pin	Function name
P108	TMS/SWDIO
P300	TCK/SWCLK
P109	TDO/SDDO
P110	TDI
RESET	RESET

8.4 UART & CAN

The SK-S7G2 kit exposes one MCU UART as an external connection, as well as a CAN interface (J7 and J10). The UART interface can be configured to operate in RS-232 mode or in RS-485 (with an external driver IC) depending on the position of jumpers J8 and J9 as described in the configuration section of this document. The following tables show the S7G2 functions connected to these interfaces.

Table 11: UART interface functions

S7G2 Pin	Function name
P706	UART_RXD
P707	UART_TXD
P801	INVALID
P800	READY (RS-232) or RE (RS-485)

Table 12: CAN interface functions

S7G2 Pin	Function name
P401	CAN_TX
P402	CAN_RX

Chapter 9 – Appendix A

9.1 Pin Connections

The following table shows the connection of S7G2 pins to SK-S7G2 functions.

S7G2 Pin	Peripheral	Signal	SK-S7G2 Connector
P000	Arduino Shield	AN000	J26 (1)
P001	Arduino Shield	AN001	J26 (2)
P002	Arduino Shield	AN002	J26 (3)
P004	LCD (Touchscreen)	IRQ9#	n/a
P005	User Button	IRQ10#	S5
P006	User Button	IRQ11#	S4
P007	Arduino Shield	n/a	J24 (1)
P008	Arduino Shield	AN003	J26 (4)
P009	Arduino Shield	AN004	J26 (5)
P010	Ethernet	ETH_IRQ14#	n/a
P014	Audio	DA0	n/a
P015	Arduino Shield	AN005	J26 (6)
P100	LCD / PMODA	LCD_MISO / MISOA_A	J3 (18) / J12 (5)
P101	LCD / PMODA	LCD_MOSI / MOSIA_A	J3 (17) / J12 (3)
P102	LCD / PMODA	LCD_SCK / RSPCK_A	J3 (14) / J12 (7)
P103	LCD / PMODA	LCD_CS / SSLA0_A	J3 (13) / J12 (1)
P104	Arduino Shield	n/a	J24 (4)
P105	Arduino Shield	n/a	J24 (5)
P106	Arduino Shield	n/a	J24 (6)
P108	JTAG	TMS/SWDIO	J18 (2)
P109	JTAG	TDO/SDDO	J18 (6)
P110	JTAG	TDI	J18 (8)
P111	PMODA	IRQ4#	J12 (2)
P112	Arduino Shield	n/a	J27 (5)
P113	Bluetooth	BLE_PWR_EN	n/a
P202	Arduino Shield	n/a	J27 (3)
P204	Cap Touch	n/a	S1
P205	Cap Touch	n/a	S3
P206	Cap Touch	TSCAP_A	n/a
P207	Cap Touch	n/a	S2 (5)

P300	JTAG	TCK/SWCLK	J18 (4)
P301	Bluetooth / Arduino Shield	RXD2 / RXD2	n/a / J27 (2)
P302	Bluetooth / Arduino Shield	TXD2 / TXD2	n/a / J27 (1)
P303	Arduino Shield	n/a	J27 (4)
P304	Bluetooth	RXD6_A	n/a
P305	Bluetooth	TXD6_A	n/a
P306	Bluetooth	SCK6_A	n/a
P308	USB Host	FAULT	n/a
P309	Bluetooth	BLE_RESET	n/a
P310	PMODA	n/a	J12 (4)
P311	PMODA	n/a	J12 (6)
P312	PMODA	n/a	J12 (8)
P313	LCD	LCD_HSYNC	J3 (40)
P314	LCD	LCD_VSYNC	J3 (41)
P315	LCD	LCD_Data_Enable	J3 (38)
P400	PMODB	IRQ0#	J14 (2)
P401	CAN	CAN_TX	
P402	CAN	CAN_RX	
P403	Ethernet	ETH_MDC	
P404	Ethernet	ETH_MDIO	
P405	Ethernet	ETH_TXD_EN	
P406	Ethernet	ETH_TXD1	
P407	USB Device	USB_VBUS	J5 (1)
P408	Cap Touch	n/a	S2 (4)
P409	Cap Touch	n/a	S2 (3)
P410	PMODB	RXD0_B	J14 (5)
P411	PMODB	TXD0_B	J14 (3)
P412	PMODB	SCK0_B	J14 (7)
P413	PMODB	CTS0_B	J14 (1)
P414	Cap Touch	n/a	S2 (2)
P415	Cap Touch	n/a	S2 (1)
P500	QSPI Flash	QSPI_CLK	n/a
P501	QSPI Flash	QSPI_CS#	n/a
P502	QSPI Flash	QSPI_DQ0	n/a
P503	QSPI Flash	QSPI_DQ1	n/a
P504	QSPI Flash	QSPI_DQ2	n/a
P505	QSPI Flash	QSPI_DQ3	n/a

P506	Arduino Shield	n/a	J24 (2)
P507	Arduino Shield	n/a	J24 (3)
P511	LCD (Touchscreen) / Arduino Shield	SDA2 / SDA2	n/a / J24 (9)
P512	LCD (Touchscreen) / Arduino Shield	SCL2 / SCL2	n/a / J24 (10)
P600	User LED	n/a	LED1
P601	User LED	n/a	LED2
P602	User LED	n/a	LED3
P603	PMODB	n/a	J14 (4)
P604	PMODB	n/a	J14 (6)
P605	PMODB	n/a	J14 (8)
P606	LCD	LCD_D3	J3 (24)
P607	LCD	LCD_D4	J3 (25)
P608	Arduino Shield	n/a	J27 (6)
P609	LCD (Touchscreen)	RESET#	n/a
P613	Arduino Shield	n/a	J27 (7)
P614	Arduino Shield	n/a	J27 (8)
P615	LCD	LCD_D10	J3 (31)
P700	Ethernet	ETH_TXD0	n/a
P701	Ethernet	ETH	n/a
P702	Ethernet	ETH_RXD0	n/a
P703	Ethernet	ETH_RXD1	n/a
P704	Ethernet	ETH_RX_ER	n/a
P705	Ethernet	ETH_CRS_DV	n/a
P706	RS-232	UART_RXD	J9 (4)
P707	RS-232	UART_TXD	J9 (3)
P800	RS-232	READY/RE	J8 (2)
P801	RS-232	INVALID	n/a
P802	LCD	LCD_D2	J3 (23)
P803	LCD	LCD_D1	J3 (22)
P804	LCD	LCD_D0	J3 (21)
P806	Ethernet	ETH_RESET#	n/a
P900	LCD	LCD_CLK_B	J3 (39)
P901	LCD	LCD_D15	J3 (37)
P905	LCD	LCD_D11	J3 (33)
P906	LCD	LCD_D12	J3 (34)
P907	LCD	LCD_D13	J3 (35)
P908	LCD	LCD_D14	J3 (36)

PA00	LCD	LCD_D5	J3 (26)
PA01	LCD	LCD_D6	J3 (27)
PA08	LCD	LCD_D9	J3 (30)
PA09	LCD	LCD_D8	J3 (29)
PA10	LCD	LCD_D7	J3 (28)
PB00	USB Host	USBH_VBUSEN	n/a
PB01	USB Host	USBHS_VBUS	J6 (1)
RESET	JTAG	RESET	J18 (10)
USBHS_N	USB Host	USBHS_N	J6 (2)
USBHS_P	USB Host	USBHS_P	J6 (3)
USBF_N	USB Device	USBF_N	J5 (2)
USBF_P	USB Device	USBF_P	J5 (3)

Chapter 10 - Post Production Modifications

None on v2.0 products.

Chapter 11 - Additional Information

Further information available for this product can be found on the Renesas Synergy website at:

http://am.renesas.com/products/embedded_systems_platform/synergy/

General information on Renesas Microcontrollers can be found on the global Renesas website:

http://www.renesas.com/

Renesas Electronics America, Inc.

2801 Scott Boulevard

Santa Clara, CA 95050-2554, US