WIFI Video Module
LW6304
User Manuals

Amendment record

version	date	description	writer
Ver1.0	2014-12-16	Writing documentation	lender
Ver1.1	2015-01-05	Adding instruction	lender

contents

1.Summary（introduction）.....2

2.Module product diagrams.....3

3.Module structure size.....3

4.Module features 5

5.Module parameters.....5

6.Module application.....5

7.Module operation steps.....6

1.Summary

LW6304 is a module which use WIFI protocol of standard 2.4G frequency band (comply with b/n/g international wifi standard) to realize video wireless transmission,which at present is the minimum-volume WIFI video module of the country.The module adopt sophisticated image compression technology H.264，produce data flow of high compression ratio, then sent to random display terminal(the smart phone or PC of Android、iPhone etc.) by the method of WIFI point-to-point,and the display terminal will fulfill the application function's handle work of video real-time display,videotape,photograph,data two-way passthrough and so on.

- ❖ High speed,stable video transmission
  - ✓ H.264 format streaming video transmission.
  - ✓ Video wireless transmission,realize terminal equipment to conduct functions of photograph、videotape and playback etc.
  - ✓ High resolution video display, support D1/VGA high speed transmission.
  - ✓ Point-to-point operation mode,no need outer net for transmission.
  - ✓ Support both-way serial port communication.

- ❖ Multi-platform and multi-terminal video display and control
  - ✓ Windows end video display(underdevelopment)
  - ✓ Android phone end video display
  - ✓ Iphone phone end video display

- ❖ Easy of use,low power dissipation and convenient power supply
  - ✓ 3.3-5V power supply
  - ✓ Low power dissipation
  - ✓ Easy of use,any smart phone could connect like house router,it is available to watch the video just connect the unfold software.

- ❖ Safe,reliable WIFI link
  - ✓ Support communication network which is AP centered
  - ✓ Support IEEE 802.11b/n/g protocol
  - ✓ Support extraposition antenna,support further distance.

2.Module product diagrams

The right side of the module

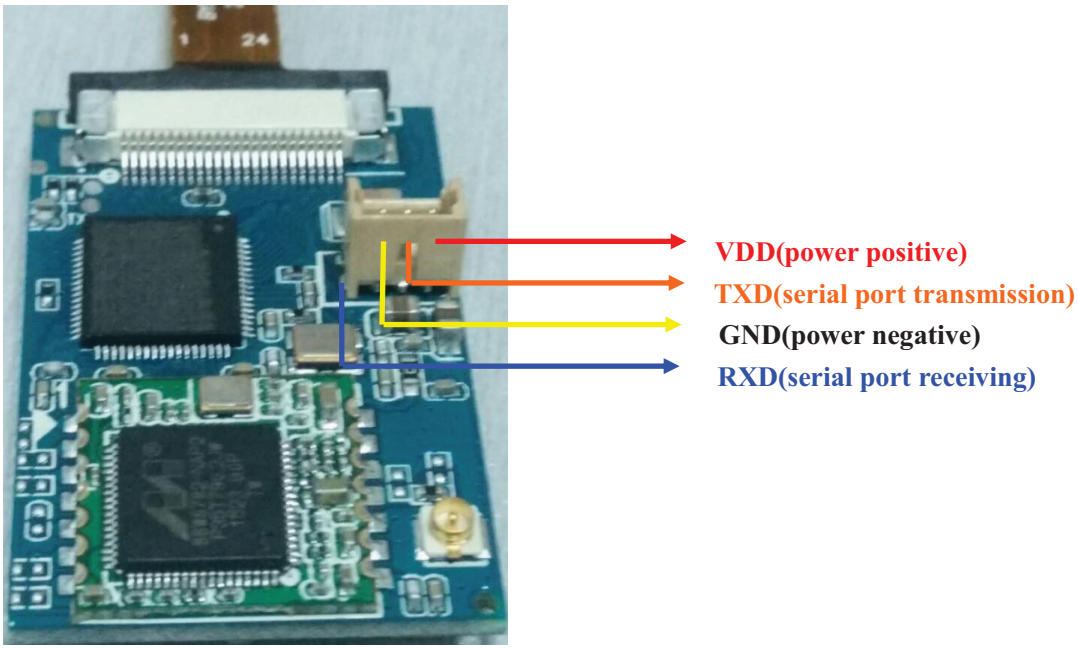

Note：

1、 About interface definition, we default to 1.25MM 3PIN interface,they are VDD/TXD/GND
2、 Part users need RXD function,we will match 4PIN interface
3、 The camera could choose GC0308 or OV7725 lens (24PIN + FPC)

The back side of the module：

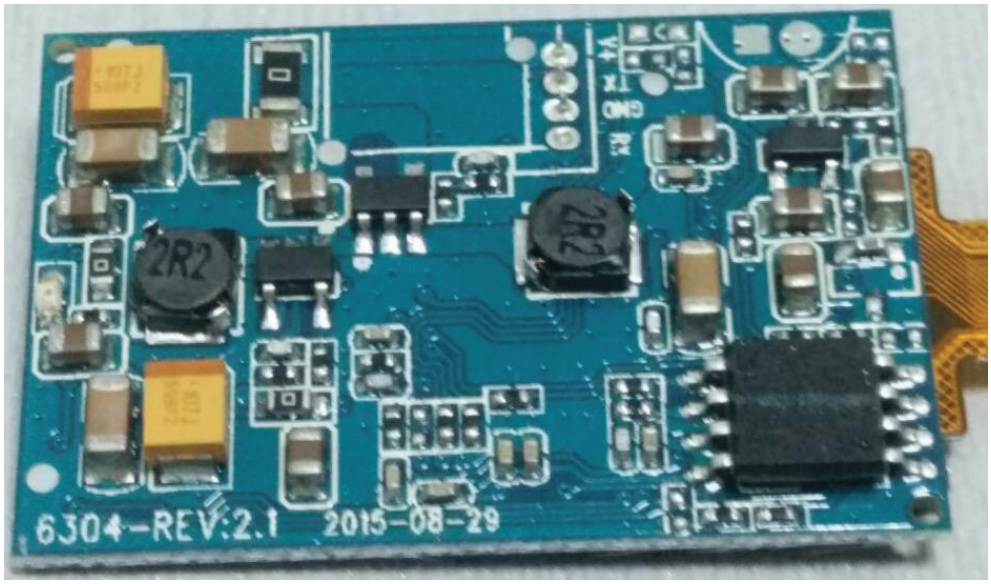

3.Module structure size

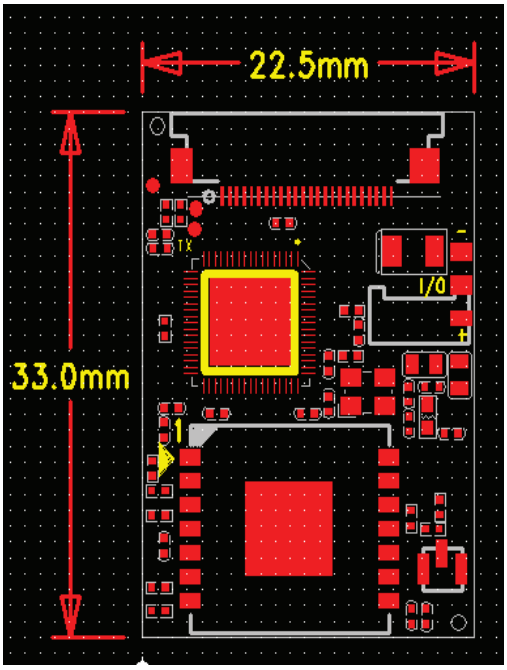

TOP

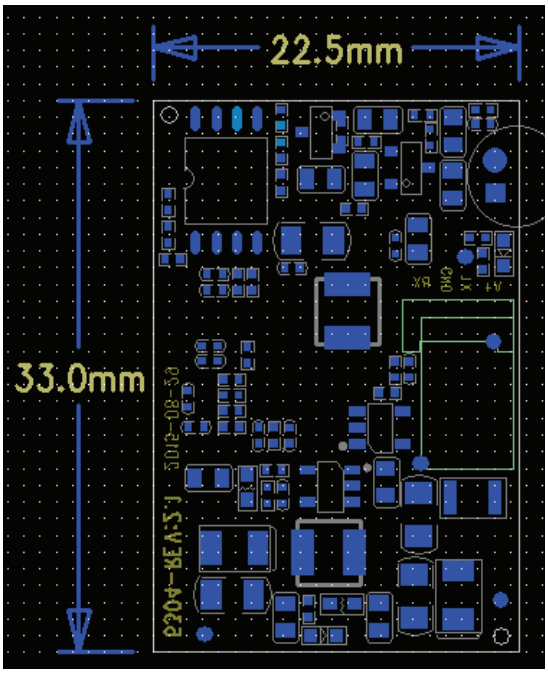

BOTTOM

4.Module features

1、The module has minimum volume,it is the smallest WIFI video module on the market at present,22.5*33MM;

2、The module is highly integrated,the master control has built-in DSP and SDRAM,which only need one master control to fulfill the majority of the work;

3、WIFI start quickly, after power on 3-4S could appear WIFI;

4、Low power dissipation,less thermal diffusivity,barely thermal diffusivity for a long time,power supply range is 3.3-5V，could connect lithium battery;

5、Higher resolution ratio,support D1(720*576) high resolution ratio;

6、Further transmission distance,reflect speed is fast,hollowness could reach 150 meters;

7、Short delay,generally delay in 50-100MS,human eyes could barely see the delay,it is quite smoothly;

5.Module parameters

contents	Parameter description
Supportive protocol and standard	802.11g/n protocol、802.11b protocol
Camera	OV7725/GC0308
Module output sampling rate	25 frames
Work pattern	AP pattern
Transimission speed ratio	Maximum 150MHZ
Antenna pattern	Extraposition antenna
Sensitivity @PER	<-70dBm
Working frequency	2412-2462 MHz
LED indicate	blue light on means proper functioning
Transmitted power	17dBm
Supportive operation system	IPHONE/ANDROID
Working voltage	3.3-5V
Working temperature	-10°C ~ +70°C
Delay	<=100ms
Module size	22.5*33mm H=7mm
Starting up time	3-4S
Resolution ratio	D1
Communication protocol	Serial port
Maximum distance	150 meters
Wireless pattern	AP

6.Application fields

WIFI is everywhere and has became necessary part of our life, WIFI application as well widespread use, this WIFI video module could be interpreted as a house router, which can sent WIFI signal automatically after

power on,smart phone or computer could connect the WIFI by searching it,the module through WIFI real-time transmit the video or audio signal to smart terminal display.WIFI is characterized by max bandwith, stable transmission and there is no other wireless communication could compare with it,for instance, bluetooth can not transmit video but through WIFI it could realize remote operation and so on,the operation is simple、convenient and is already widespread in many fields.

7、Module operation steps

Step one：know the module

1、WIFI video module main board

2、One antenna

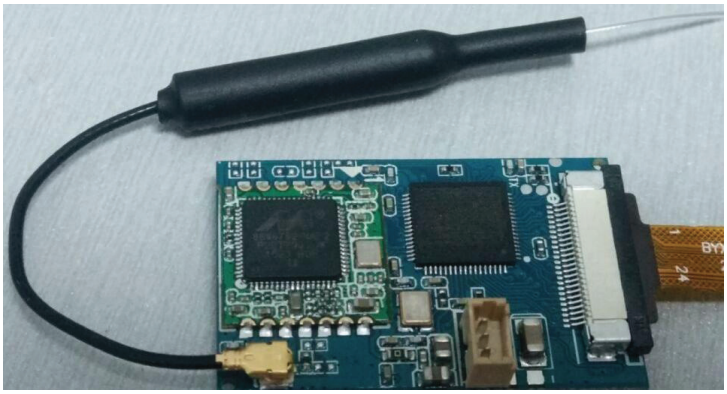

Step two：supply the module with power

1、Power supply mode：lithium battery powered is alright（3.3-5V power supply）

2、Module interface figure as shown at right：

VDD：power positive（3.3-5V）

TXD:serial port transmit terminal which is used for instruct correspondence.

GND:power negative

RXD:serial port receiving terminal which is used for instruct correspondence.

The interface has two types（1.25MM standard base），one is 3PIN，the other one is 4PIN，satisfy different users' interface definition.

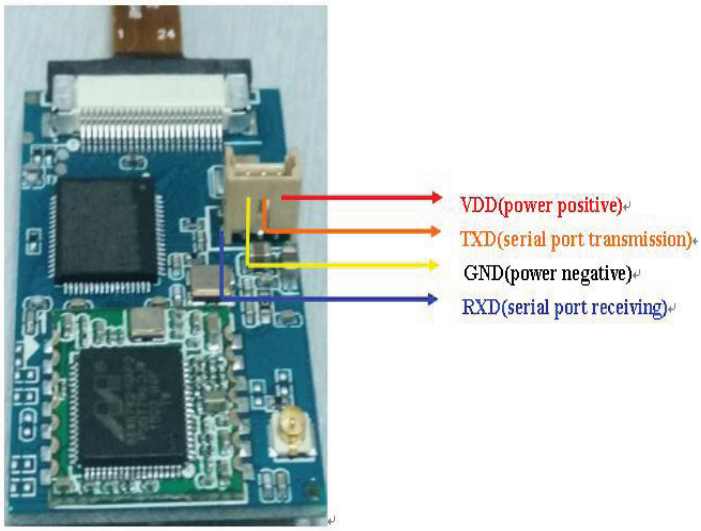

Step three：installing software

1、Android cell phone： please go to search and download drone spy from 360 cell phone assistant or Google play.

Iphone：please go to Appstore search and download：drone spy

2、Scan QR code and download，as shown at right figure：

Android version：

360 cell phone assistant（domestic customers, scan QR code）：

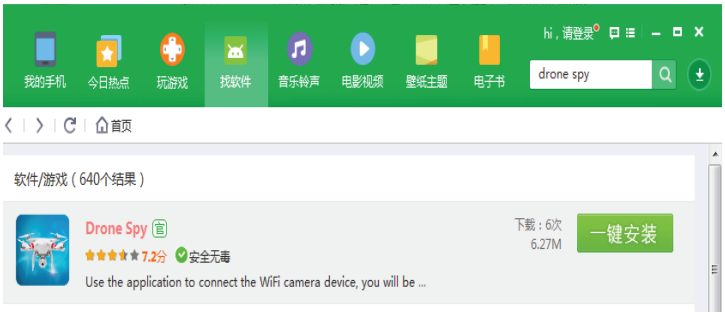

	Google play(foreign customers please use Android scan here)： Apple version：
Step four：connect WIFI Get into cell phone's WIFI search list,find a new WIFI name,default to "LW6301+ random number", each module has a corresponding WIFI name, designation software could amend through setup menu， there is no WIFI password, just click on the link .	
Step five ： start the software Open the software that installed in step three, display one LOGO,click on one LOGO picture, get into video receiving interface.	

Software instruction:

1、 Open the software, enter into LOGO interface,in the interface there are helptext,setting up, enter into main interface.

2、 For using convenience when getting into the main interface,user could choose no remote sensing control and do switch through OFF and ON at top right corner,default to OFF.

3、 Please read the helptext for remote sensing interface instruction.

Video result link：
http://v.youku.com/v_show/id_XOTY2Mjc0NzY0.html
or
http://v.youku.com/v_show/id_XOTY2MjcyODE2.html

These above videos result would be poor because of Youku transcoding,please take it subject to real module test or connect us,thank you!

Any company of the host device which install this modular with limit modular approval should perform the test of radiated emission and spurious emission according to FCC part 15C：15.247 and 15.209 requirement， Only if the test result comply with FCC part 15C：15.247 and 15.209 requirement， then the host can be sold legally.

FCC Statement

This device complies with part 15 of the FCC Rules. Operation is subject to the following two conditions: (1) This device may not cause harmful interference, and (2) this device must accept any interference received, including interference that may cause undesired operation.

Changes or modifications not expressly approved by the party responsible for compliance could void the user's authority to operate the equipment.

NOTE: This equipment has been tested and found to comply with the limits for a Class B digital device, pursuant to Part 15 of the FCC Rules. These limits are designed to provide reasonable protection against harmful interference in a residential installation. This equipment generates, uses and can radiate radio frequency energy and, if not installed and used in accordance with the instructions, may cause harmful interference to radio communications. However, there is no guarantee that interference will not occur in a particular installation. If this equipment does cause harmful interference to radio or television reception, which can be determined by turning the equipment off and on, the user is encouraged to try to correct the interference by one or more of the following

measures:

-- Reorient or relocate the receiving antenna.

-- Increase the separation between the equipment and receiver.

-- Connect the equipment into an outlet on a circuit different from that to which the receiver is connected.

-- Consult the dealer or an experienced radio/TV technician for help.

FCC Radiation Exposure Statement

The modular can be installed or integrated in mobile or fix devices only. This modular cannot be installed in any portable device, for example, USB dongle like transmitters is forbidden.

This modular complies with FCC RF radiation exposure limits set forth for an uncontrolled environment. This transmitter must not be co-located or operating in conjunction with any other antenna or transmitter. This modular must be installed and operated with a minimum distance of 20 cm between the radiator and user body.

If the FCC identification number is not visible when the module is installed inside another device, then the outside of the device into which the module is installed must also display a label referring to the enclosed module. This exterior label can use wording such as the following: “Contains Transmitter Module FCC ID:2AFV4LW6304 Or Contains FCC ID:2AFV4LW6304”

when the module is installed inside another device, the user manual of this device must contain below warning statements;

1. This device complies with Part 15 of the FCC Rules. Operation is subject to the following two conditions:

(1) This device may not cause harmful interference.

(2) This device must accept any interference received, including interference that may cause undesired operation.

2. Changes or modifications not expressly approved by the party responsible for compliance could void the user's authority to operate the equipment.

The devices must be installed and used in strict accordance with the manufacturer's instructions as described in the user documentation that comes with the product