SOLUM
Newton Core Plus 4-Color (BWRY)
Electronic Shelf Label Datasheet

18/06/2025

Summary
This datasheet presents the general performance and specifications of Newton Core Plus 4-Color (BWRY) Label for SOLUM Electronic Shelf Label (ESL) System.

© SOLUM. All rights reserved

The names of actual companies and products mentioned herein may be the trademarks of their respective owners.

No part of this document may be reproduced, stored in a retrieval system, or transmitted in any form or by any means without the express written consent of SOLUM

This document is subject to change without notice.

This datasheet is a draft version provided for sample purposes only. Please note that specifications and details are subject to change in final production.

THE SPECIFICATIONS AND INFORMATION REGARDING THE PRODUCTS IN THIS MANUAL ARE SUBJECT TO CHANGE WITHOUT NOTICE. ALL STATEMENTS, INFORMATION, AND RECOMMENDATIONS IN THIS MANUAL ARE BELIEVED TO BE ACCURATE BUT ARE PRESENTED WITHOUT WARRANTY OF ANY KIND, EXPRESS OR IMPLIED. USERS MUST TAKE FULL RESPONSIBILITY FOR THEIR APPLICATION OF ANY PRODUCTS.

THE SOFTWARE LICENSE AND LIMITED WARRANTY FOR THE ACCOMPANYING PRODUCT ARE SET FORTH IN THE INFORMATION PACKET THAT SHIPPED WITH THE PRODUCT AND ARE INCORPORATED HEREIN BY THIS REFERENCE. IF YOU ARE UNABLE TO LOCATE THE SOFTWARE LICENSE OR LIMITED WARRANTY, CONTACT YOUR SOLUM REPRESENTATIVE FOR A COPY.

NOTWITHSTANDING ANY OTHER WARRANTY HEREIN, ALL DOCUMENT FILES AND SOFTWARE OF THESE SUPPLIERS ARE PROVIDED “AS IS" WITH ALL FAULTS.SOLUM AND THE ABOVE-NAMED SUPPLIERS DISCLAIM ALL WARRANTIES, EXPRESSED OR IMPLIED, INCLUDING, WITHOUT LIMITATION, THOSE OF MERCHANTABILITY, FITNESS FOR A PARTICULAR PURPOSE AND NONINFRINGEMENT OR ARISING FROM A COURSE OF DEALING, USAGE, OR TRADE PRACTICE.

IN NO EVENT SHALL SOLUM OR ITS SUPPLIERS BE LIABLE FOR ANY INDIRECT, SPECIAL, CONSEQUENTIAL, OR INCIDENTAL DAMAGES, INCLUDING, WITHOUT LIMITATION, LOST PROFITS OR LOSS OR DAMAGE TO DATA ARISING OUT OF THE USE OR INABILITY TO USE THIS MANUAL, EVEN IF SOLUM OR ITS SUPPLIERS HAVE BEEN ADVISED OF THE POSSIBILITY OF SUCH DAMAGES

Any Internet Protocol (IP) addresses and phone numbers used in this document are not intended to be actual addresses and phone numbers. Any examples, command display output, network topology diagrams, and other figures included in the document are shown for illustrative purposes only. Any use of actual IP addresses or phone numbers in illustrative content is unintentional and coincidental.

SOLUM and the SOLUM logo are trademarks or registered trademarks of SOLUM and/or its affiliates in the KOREA and other countries. Third-party trademarks mentioned are the property of their respective owners. The use of the word partner does not imply a partnership relationship between SOLUM and any other company.

©2016-2025 SOLUM Co. Ltd, Inc. All rights reserved.

Table of Contents

1. Preface 6
1.1. About This Guide 6
1.2. Audience 6
1.3. Abbreviations and Acronyms 6
2. Overview 7
3. Specification 8
3.1. Product Specification 8
3.2. Radio (RF) Specification 10
3.3. NFC Specification 10
3.4. Features 11
3.5. Mechanical Drawing 12
3.5.1. 1.6” 12
3.5.2. 2.1” 12
3.5.3. 2.5” 13
3.5.4. 2.8” 13
3.5.5. 3.5” 14
3.5.6. 4.2” 14
3.5.7. 5.8” 15
3.5.8. 7.5” 15
3.6. Label Marking 16
3.7. Initial Display Image 17
3.8. Certifications 19
3.8.1. FCC 19
3.8.2. CE 19
3.8.3. IC 20
3.8.4 KC 20
4. Packaging 21
4.1. 1.6” 21
4.2. 2.1” 22

4.3. 2.5” 23
4.4. 2.8” 24
4.5. 3.5” 25
4.6. 4.2” 26
4.7. 5.8” 27
4.8. 7.5” 28
5. Reliability Test 29
6. Product Handling Precautions 30
6.1. Usage Environment 30
6.2. Storage and Use 30
6.3. Product Cleaning 31
6.3.1. For Spray Cleaning: 31
6.3.2. For Wet Tissue Cleaning: 32
6.4. Battery Replacement 32
7. Battery Handling Guide 34
7.1. Avoiding hazards in lithium battery handling 34
7.2. Proper Storing and Disposing of Lithium Batteries 36

Document History

Rev.	Date	Revision History	Page
v0.1	22/05/2025	Draft	-
v0.1-PRE	18/06/2025	Preliminary Release	-

1. Preface

1.1. About This Guide

This datasheet presents the specification and general performance of SOLUM's Newton Core Plus 4-Color (BWRY) Electronic Shelf Labels (ESLs) lineup.

1.2. Audience

This manual is intended for any user (IT, operations, store managers, installers, etc.) authorized to operate and install SOLUM ESLs.

1.3. Abbreviations and Acronyms

Terminology/Abbreviation	Description
GW	Gateway
ESL	Electronic Shelf Label
RF	Radio Frequency
IT	Information Technology
PoE	Power over Ethernet
TBD	To Be Decided

2. Overview

SOLUM Newton Core Plus 4-Color (BWRY) Electronic Shelf Labels (ESLs) are components to a total SOLUM's ESL System. The SOLUM's ESL System consists of the ESLs, Gateway(s), and Server and is used to electronically display key information such as price and product information, that are traditionally printed or written on paper in environments like supermarkets, warehouses, and factories. Offered at an exceptionally competitive price, Newton Core Plus 4-Color (BWRY) ESLs encompass essential features while incorporating a range of core functionalities that meet modern demands.

SOLUM's Newton Core Plus 4-Color (BWRY) Electronic Shelf Labels (ESLs) are the industry leading solutions that provide the longest battery life, fastest update speed, built in LEDs, multiple pages per ESL, and more to take the operation beyond just displaying information on the ESLs.

Newton Core Plus 4-Color (BWRY) Electronic Shelf Labels (ESLs) come in various useful sizes (1.6", 2.1", 2.5", 2.8", 3.5", 4.2", 5.8", 7.5") and colors to meet all customer use cases.

Figure 1. PRODUCT LINE-UP

3. Specification

This section details specifications of each ESL by size. ESLs are identified by the diagonal measurement of the display in inches. For example, a 2.8” ESL is referring to an ESL with the diagonal display dimension of 2.8”.

3.1. Product Specification

Item	Description
Label Dimensions (W x H x D)	**1.6”:** 36.87 x 45.57 x 10.45 mm / 1.45 x 1.79 x 0.41 in **2.1”:** 64.86 x 34.00 x 10.45 mm / 2.55 x 1.34 x 0.41 in **2.5”:** 72.77 x 37.82 x 10.45 mm / 2.86 x 1.49 x 0.41 in **2.8”:** 79.65 x 38.77 x 10.45 mm / 3.14 x 1.53 x 0.41 in **3.5”:** 98.32 x 47.91 x 10.55 mm / 3.87 x 1.89 x 0.42 in **4.2”:** 95.99 x 84.65 x 11.80 mm / 3.78 x 3.33 x 0.46 in **5.8”:** 166.35 x 62.79 x 13.80 mm / 6.55 x 2.47 x 0.54 in **7.5”:** 125.39 x 184.82 x 15.40 mm / 4.94 x 7.28 x 0.61 in
Display Dimensions (W x H)	**1.6”:** 27.00 x 27.00 mm / 1.06 x 1.06 in **2.1”:** 46.75 x 24.13 mm / 1.84 x 0.95 in **2.5”:** 56.44 x 28.32 mm / 2.22 x 1.11 in **2.8”:** 63.58 x 29.27 mm / 2.50 x 1.15 in **3.5”:** 79.49 x 37.09 mm / 3.13 x 1.46 in **4.2”:** 84.80 x 63.60 mm / 3.34 x 2.50 in **5.8”:** 139.00 x 47.74 mm / 5.47 x 1.88 in **7.5”:** 97.92 x 163.20 mm / 3.86 x 6.43 in
Display Resolution	**1.6”:** 200 x 200 pixels (188 dpi) **2.1”:** 248 x 128 pixels (135 dpi) **2.5”:** 296 x 152 pixels (134 dpi) **2.8”:** 296 x 128 pixels (118 dpi) **3.5”:** 480 x 224 pixels (155 dpi) **4.2”:** 400 x 300 pixels (120 dpi) **5.8”:** 792 x 272 pixels (144 dpi) **7.5”:** 480 x 800 pixels (126 dpi)
Label Weight	**1.6”:** 18.50 g / 0.65 oz **2.1”:** 28.60 g / 1.00 oz **2.5”:** 31.40 g / 1.10 oz **2.8”:** 34.00 g / 1.20 oz **3.5”:** 45.00 g / 1.58 oz **4.2”:** 78.60 g / 2.77 oz **5.8”:** 125.00 g / 4.41 oz **7.5”:** 250.00 g / 8.82 oz
Viewing Angle	Nearly 180°

Display Colors	● ○ ● ● BWRY (Black, White, Red, Yellow)
Battery	**1.6”:** Coin Battery (CR2450) X 1 **2.1”:** Coin Battery (CR2450) X 2 **2.5”:** Coin Battery (CR2450) X 2 **2.8”:** Coin Battery (CR2450) X 2 **3.5”:** Coin Battery (CR2450) X 2 **4.2”:** Coin Battery (CR2450) X 2 **5.8”:** Battery Pack (CR2450 X 4) **7.5”:** Battery Pack (CR2450 X 4)
Wireless Communication	2.4 GHz Unlicensed ISM band for BLE physical layer with SOLUM Proprietary Protocol
Communication Distance	98 feet (30m) radius Line of Sight
Security	128-bit AES Encryption
Compliance	FCC, IC, CE, UKCA, MIC, KC, RoHS, WEEE
Operating Temperature	32°F ~ 104°F (0°C ~ 40°C) @45~70% RH
Storage Temperature	32°F ~ 104°F (0°C ~ 40°C) @45~70% RH

3.2. Radio (RF) Specification

Item	Parameter	Specification			Unit	Condition
		Min	Typ	Max		
Tx	Tx Power	-	4	-	dBm	
	[Carrier Frequency Offset and Drift]	-75	0	75	kHz	
	Tx Current	-	-	10	mA	Total current at max Tx Power
Rx	Receiver Sensitivity	-85	-	-	dBm	PER < 5%

3.3. NFC Specification

Item	Parameter	Specification			Unit	Condition
		Min	Typ	Max		
NFC	Read Distance	-	0.7	-	in	
		-	20	-	mm	

NFC antenna location shown for each ESL size.

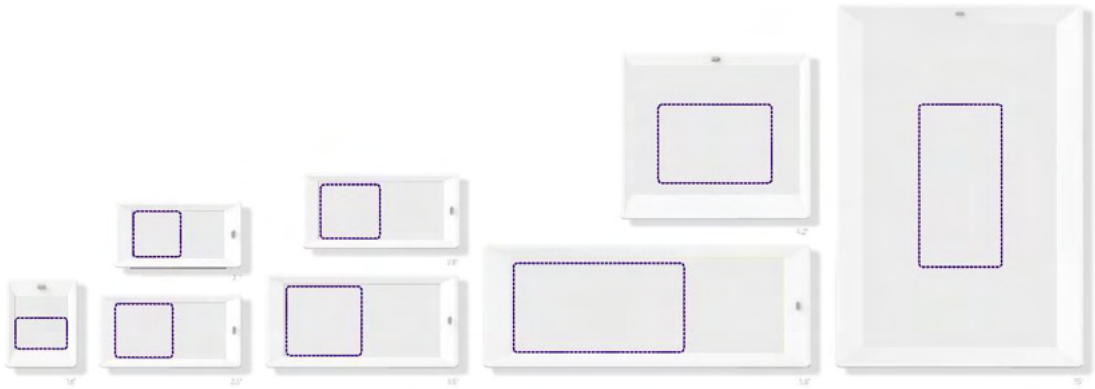

Figure 2. NFC LOCATION

3.4. Features

Some of the features of SOLUM ESL.

- Low power consumption
- ‘Real time’ update speed
- SOLUM Proprietary Protocol communication with SOLUM Gateway for added security

Item	Description
LED	7 colors (Red, Green, Blue, Yellow, Cyan, Magenta, White)
Usable Pages	Up to 7 pages*
NFC	Built-in Felica NFC Forum Type 3
Housing Bezel Color	Black, White, Gray

3.5. Mechanical Drawing

3.5.1. 1.6”

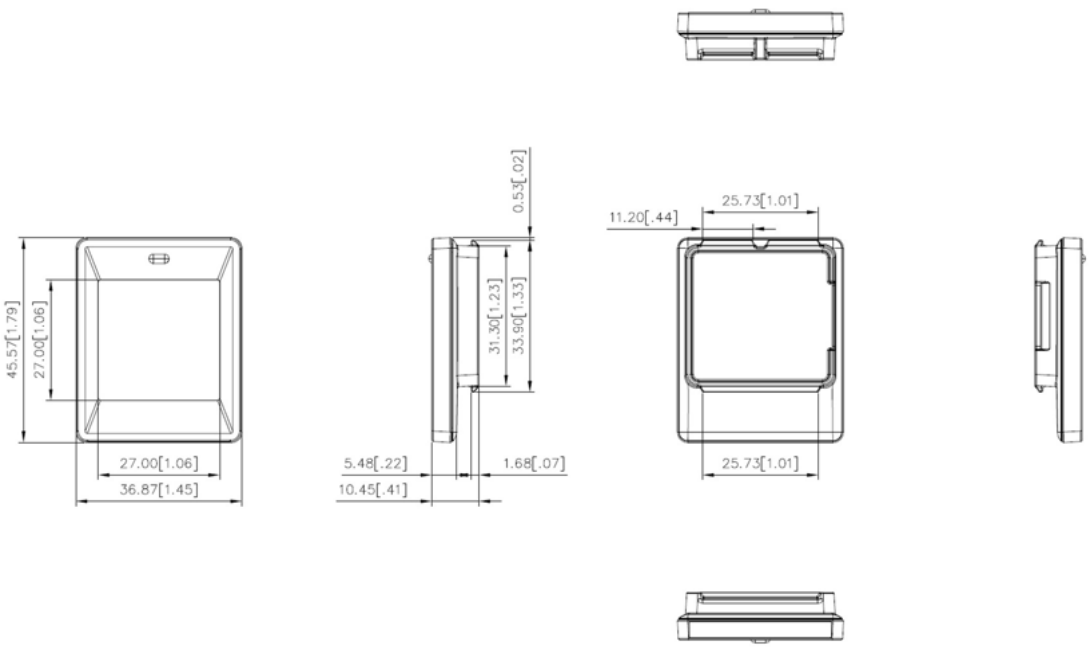

(Unit: mm)

Figure 3. 1.6” MECHANICAL DIMENSION

3.5.2. 2.1”

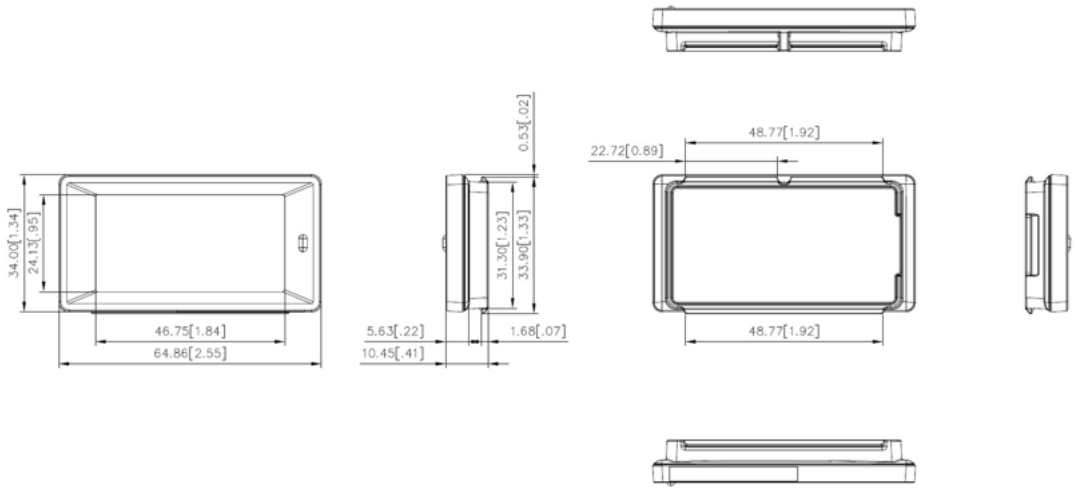

(Unit: mm)

Figure 4. 2.1” MECHANICAL DIMENSION

3.5.3. 2.5”

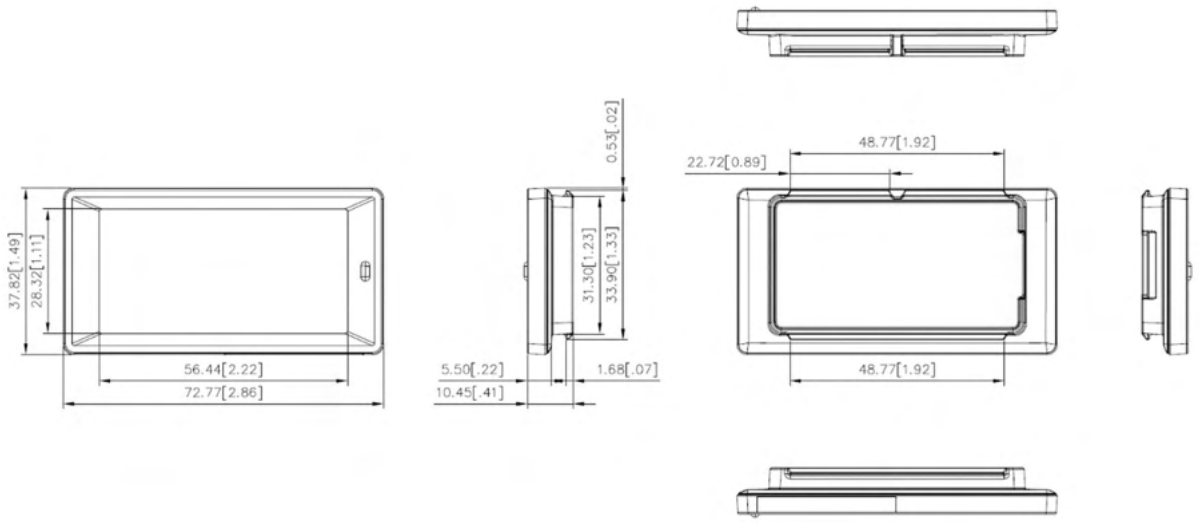

(Unit: mm)

Figure 5. 2.5” MECHANICAL DIMENSION

3.5.4. 2.8”

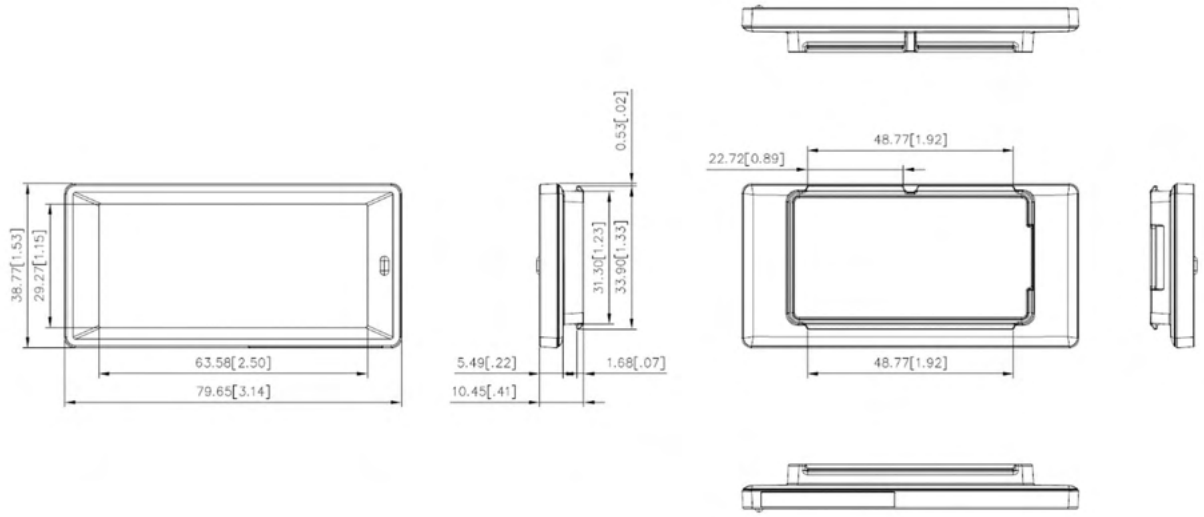

(Unit: mm)

Figure 6. 2.8” MECHANICAL DIMENSION

3.5.5. 3.5”

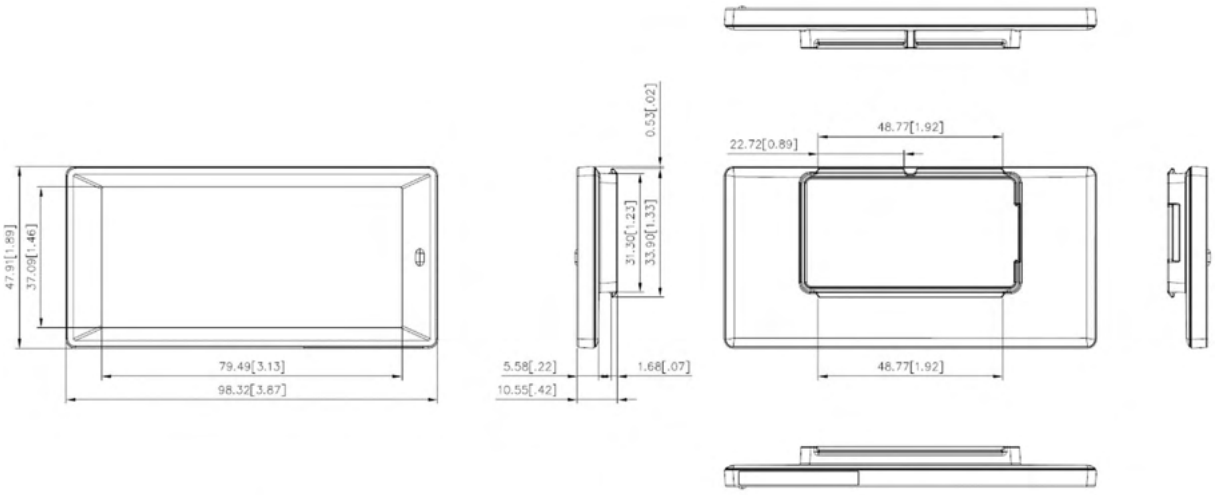

(Unit: mm)

Figure 7. 3.5” MECHANICAL DIMENSION

3.5.6. 4.2”

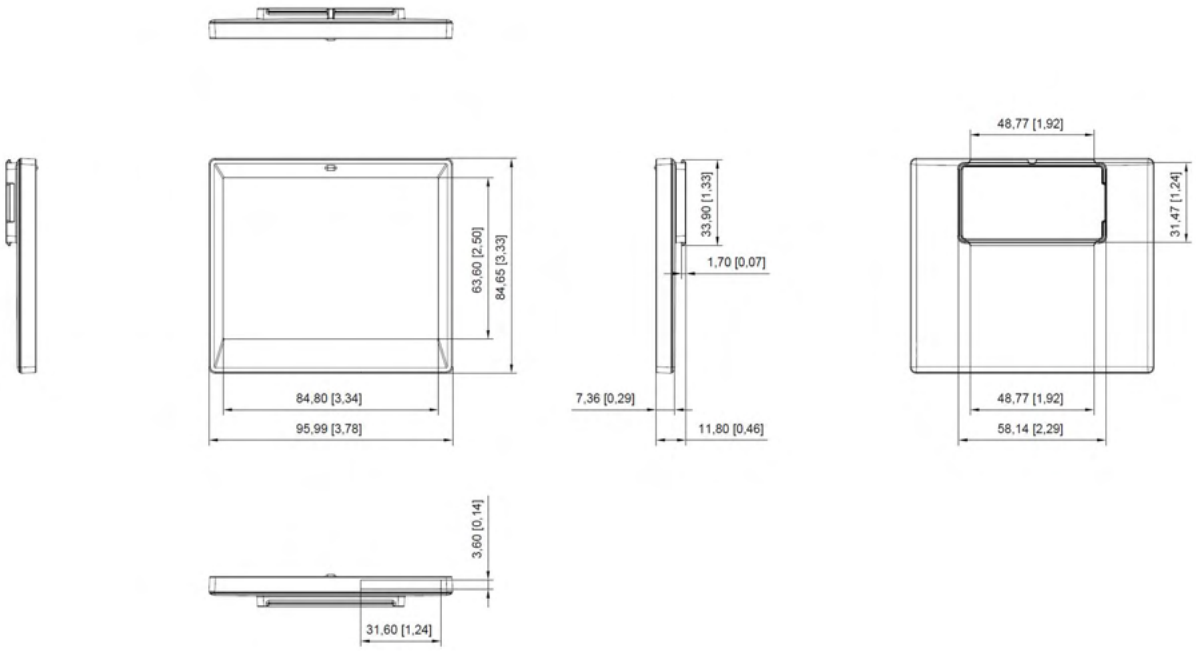

(Unit: mm)

Figure 8. 4.2” MECHANICAL DIMENSION

3.5.7. 5.8”

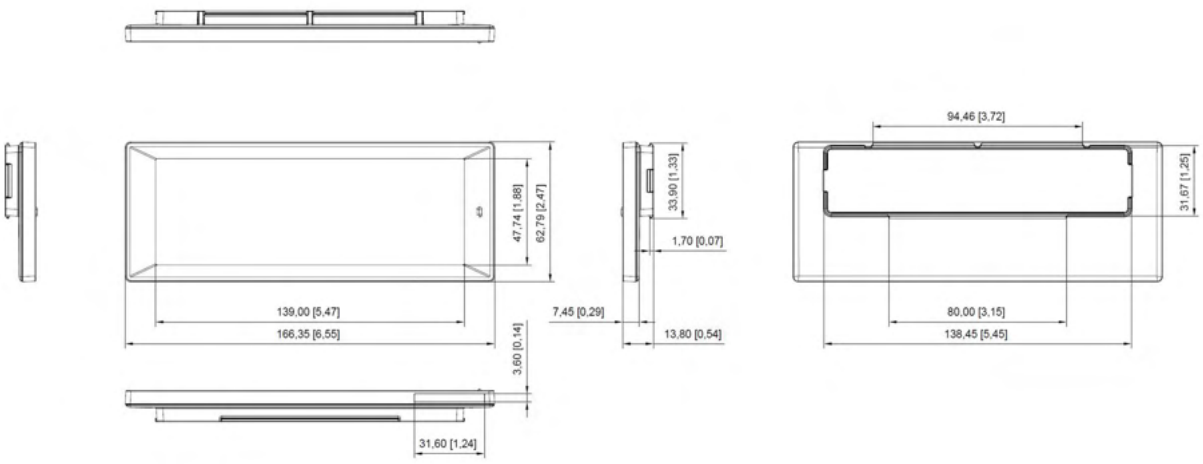

(Unit: mm)

Figure 9. 7.5” MECHANICAL DIMENSION

3.5.8. 7.5”

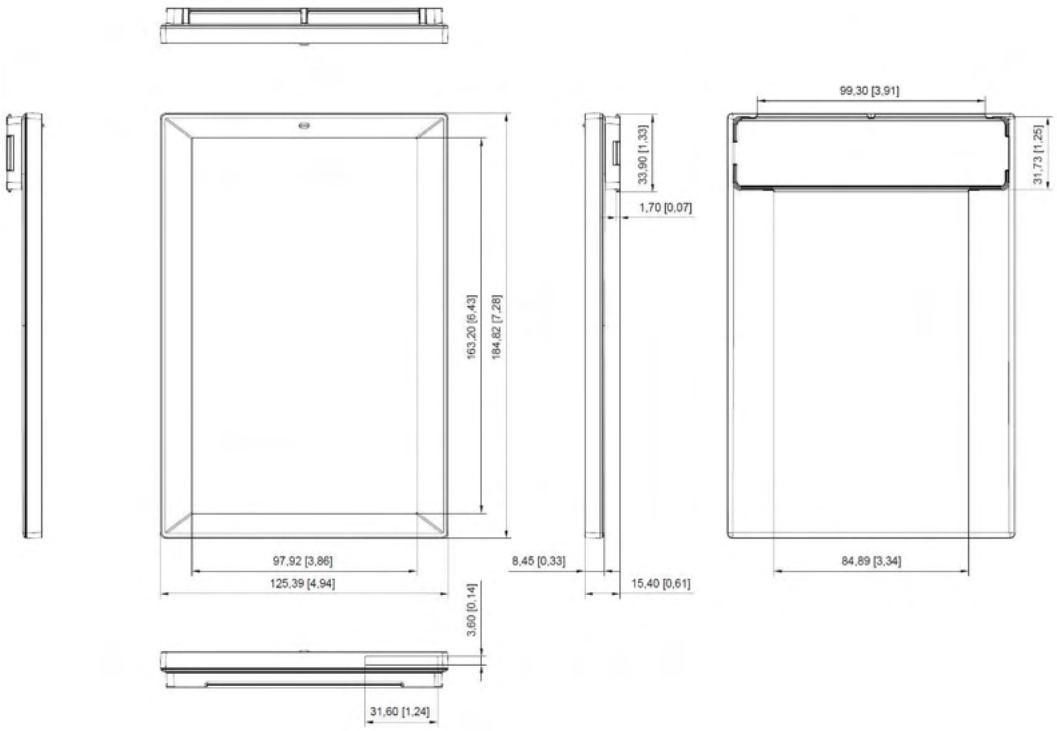

(Unit: mm)

Figure 10. 7.5” MECHANICAL DIMENSION

3.6. Label Marking

Figure 11. ESL LABELS (PRODUCT)

ESL specific information can be found laser-marked on the back of the ESL. The information displayed is not limited to: Model, Certifications, Manufacturing Information.

- Model: EL①②③④**8**⑤**4C** (i.e. EL025R8W4C)
  - ①②③: ESL Display Size
    - ✓ 016= 1.6”
    - ✓ 021= 2.1”
    - ✓ 025= 2.5”
    - ✓ 028= 2.8”
    - ✓ M35= 3.5”
    - ✓ 042= 4.2”
    - ✓ 058= 5.8”
    - ✓ M75= 7.5”
  - ④: Main IC Maker
    - ✓ L= TI
    - ✓ R= Realtek
  - ⑤: Housing Color
    - ✓ B= Black
    - ✓ W= White
    - ✓ C= Gray

Size	Model Name		
	Black	White	Gray
1.6”	EL016L8B4C	EL016L8W4C	EL016L8C4C
	EL016R8B4C	EL016R8W4C	EL016R8C4C
2.1”	EL021R8B4C	EL021R8W4C	EL021R8C4C
2.5”	EL025R8B4C	EL025R8W4C	EL025R8C4C
2.8”	EL028R8B4C	EL028R8W4C	EL028R8C4C
3.5”	ELM35R8B4C	ELM35R8W4C	ELM35R8C4C
4.2”	EL042R8B4C	EL042R8W4C	EL042R8C4C
5.8”	EL058R8B4C	EL058R8W4C	EL058R8C4C
7.5”	ELM75R8B4C	ELM75R8W4C	ELM75R8C4C

- MFD (Manufacturing Date): [YYYY.MM]

MAC Label stickers can be found in multiple areas of the ESL. They are to be scanned for operation. If the ESL is not assigned to a product, the MAC barcode and 12-digits code will be shown on the display. Dimensions can be found in the image below.

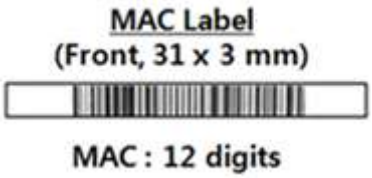

Figure 12. ESL LABELS (MAC)

3.7. Initial Display Image

ESL specific information can be found in the image of the ESL. The information displayed is not limited to : IC, FCC ID, Model, ESL Media Access and Control (MAC) Address. Information can be found in the image below.

Figure 13. ESL INITIAL DISPLAY IMAGE

[Accessed by the user]

-Step1 : Open the battery cover and remove the battery.

-Step2 : Insert the battery again and the screen will blink and reboot and then E-LABEL will be shown during 1 minute on the display

[E-Labeling 접근방법]

-1 단계 : 배터리 커버를 열고 배터리를 제거합니다.

-2 단계 : 배터리를 다시 삽입하면 스크린이 깜빡거리며 리부팅됩니다. 그 후 1 분동안 E-Label 이 화면에 나타납니다.

3.8. Certifications

3.8.1. FCC

FCC ID : 2AFWN-EL025R8W4C

FCC Information to User
This equipment has been tested and found to comply with the limits for a Class A digital device, pursuant to part 15 of the FCC Rules. These limits are designed to provide reasonable protection against harmful interference when the equipment is operated in a commercial environment. This equipment generates, uses, and can radiate radio frequency energy and, if not installed and used in accordance with the instruction manual, may cause harmful interference to radio communications. Operation of this equipment in a residential area is likely to cause harmful interference in which case the user will be required to correct the interference at his own expense.

Caution
THE GRANTEE IS NOT RESPONSIBLE FOR ANY CHANGES OR MODIFICATIONS NOT EXPRESSLY APPROVED BY THE PARTY RESPONSIBLE FOR COMPLIANCE.
SUCH MODIFICATIONS COULD VOID THE USER'S AUTHORITY TO OPERATE THE EQUIPMENT.
IMPORTANT NOTE : FCC RF Radiation Exposure Statement
This equipment complies with FCC RF radiation exposure limits set forth for an uncontrolled environment.
This equipment should be installed and operated with a minimum distance of 20 centimeters between the radiator and your body. This transmitter must not be co-located or operating in conjunction with any other antenna or transmitter.

This device complies with part 15 of the FCC Rules. Operation is subject to the following two conditions: (1) This device may not cause harmful interference, and (2) this device must accept any interference received, including interference that may cause undesired operation of the device.

3.8.2. CE

We hereby declare under our sole responsibility that the electrical product above is in compliance with the essential requirements of the Radio Equipment Directive (2014/53/EU) by application of

EN IEC 62368-1:2020+A11:2020

EN 62479:2010

EN 301 489-1 V2.2.3

EN 301 489-3 V2.3.2

EN 301 489-17 V3.2.4

EN 300 328 V2.2.2

EN 300 330 V2.1.1

and the Directive (2011/65/EU) on the restriction of the use of certain hazardous substances in electrical and electronic equipment by application of EN 62321 Series.

3.8.3. IC

IC : 22800-EL025R8W4C

ISED Information to User
[French]
Le présent appareil est conforme aux CNR d'Industrie Canada applicables aux appareils radio exempts de licence. L'exploitation est autorisée aux deux conditions suivantes :(1) l'appareil ne doit pas produire de brouillage, et (2) l'utilisateur de l'appareil doit accepter tout brouillage radioélectrique subi, meme si le brouillage est susceptible d'en compromettre le fonctionnement.

Attention: Tout changement ou modification non expressément approuvé par le fabricant peut annuler le droit de l'utilisateur à utiliser l'équipement.
exposition aux rayonnements radiofréquences. Pour se conformer aux exigences de conformité de l'exposition IC RF, une distance de séparation d'au moins 20 cm doit être maintenue entre l'antenne de cet appareil et toutes les personnes.

[English]
This device complies with Industry Canada NRCs applicable to licence-exempt radio devices. The operation is authorized under the following two conditions: (1) the device shall not cause interference, and (2) the user of the device shall accept any radio interference suffered, even if the interference is likely to compromise its operation.

Caution: Any change or modification not expressly approved by the manufacturer may void the user's right to use the equipment.
exposure to radiofrequency radiation. To comply with the ICRF exposure compliance requirements, a separation distance of at least 20 cm must be maintained between the antenna of this device and all persons.

-PMN(Product Marking Name) : ESL Label
-FVIN(Firmware Version Identity Number) : V44

3.8.4 KC

인증받은 자의 상호명 : 주식회사 솔루엠

제품명 : 특정소출력 무선기기(무선데이터통신시스템용 무선기기)

모델명 : EL025R8W4C

제조자 : 주식회사 솔루엠

제조년월 : . . .

제조국가 : 한국,베트남

4. Packaging

4.1. 1.6”

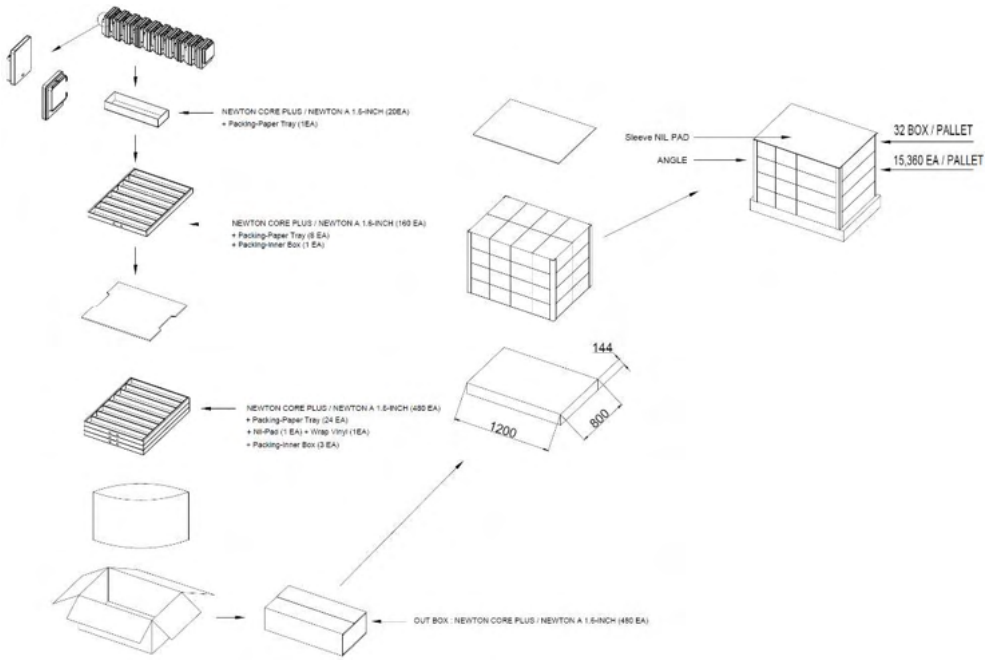

Figure 14. 1.6” PACKING-DIAGRAM (1,200 X 800)

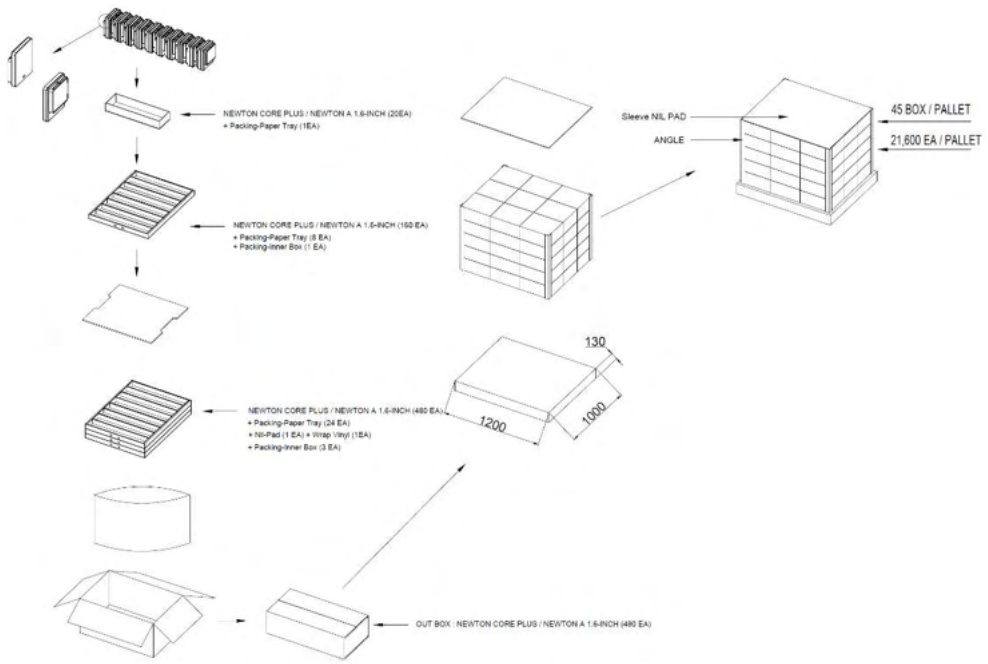

Figure 15. 1.6" PACKING-DIAGRAM (1,200 X 1,000)

4.2. 2.1”

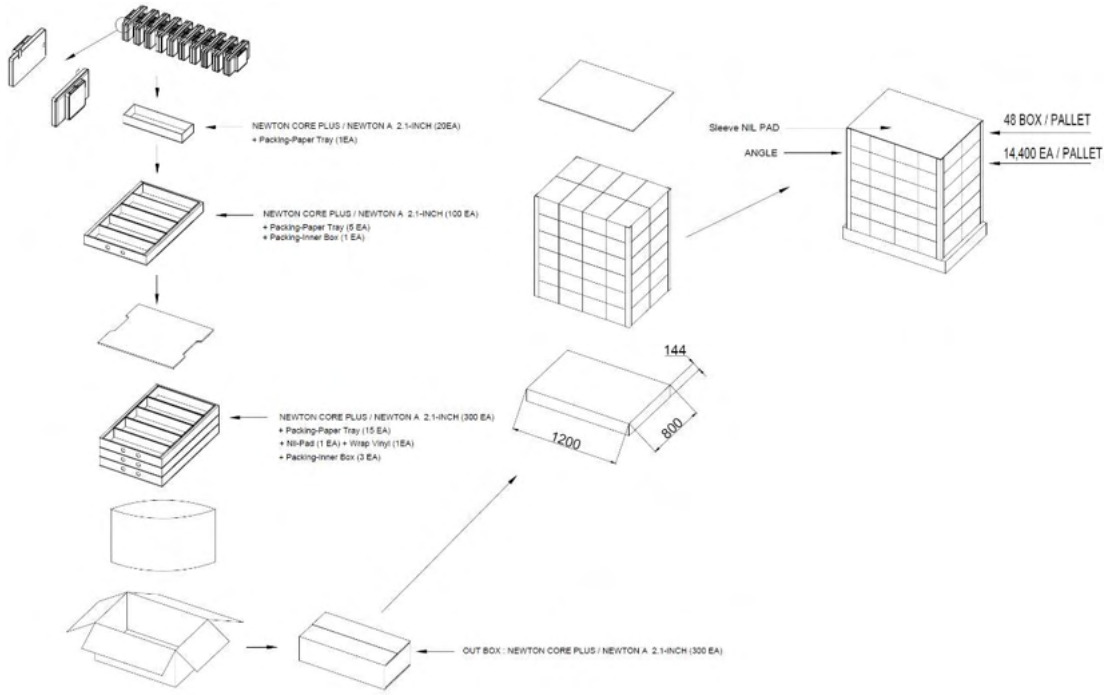

Figure 16. 2.1” PACKING-DIAGRAM (1,200 X 800)

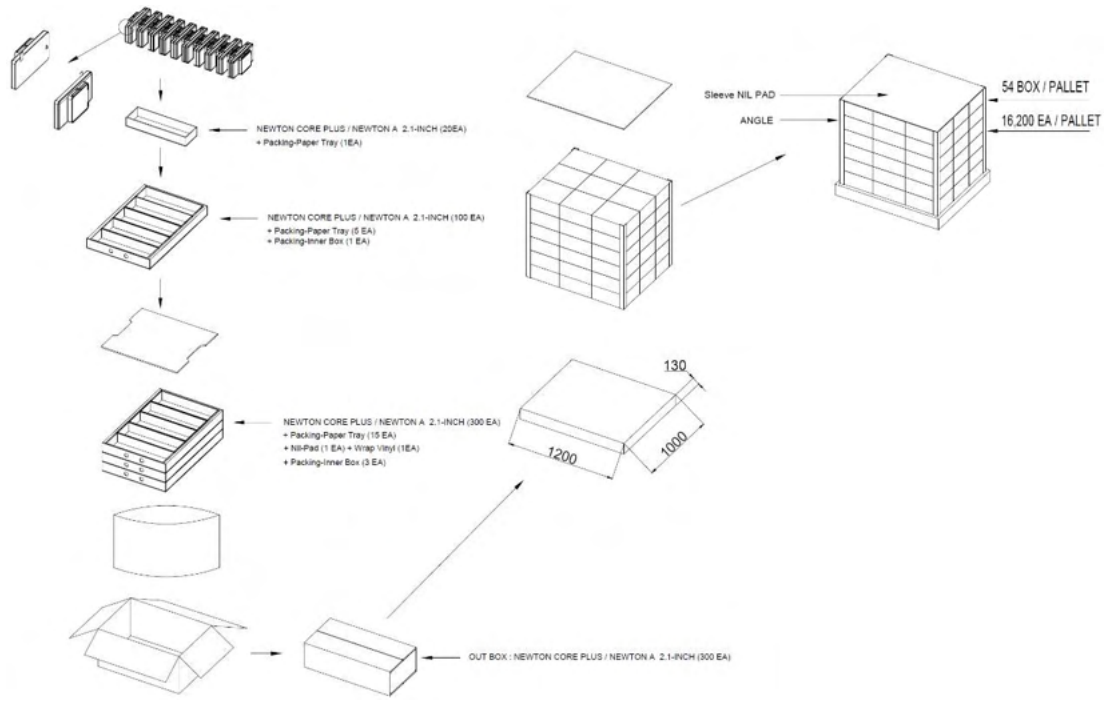

Figure 17. 2.1” PACKING-DIAGRAM (1,200 X 1,000)

4.3. 2.5”

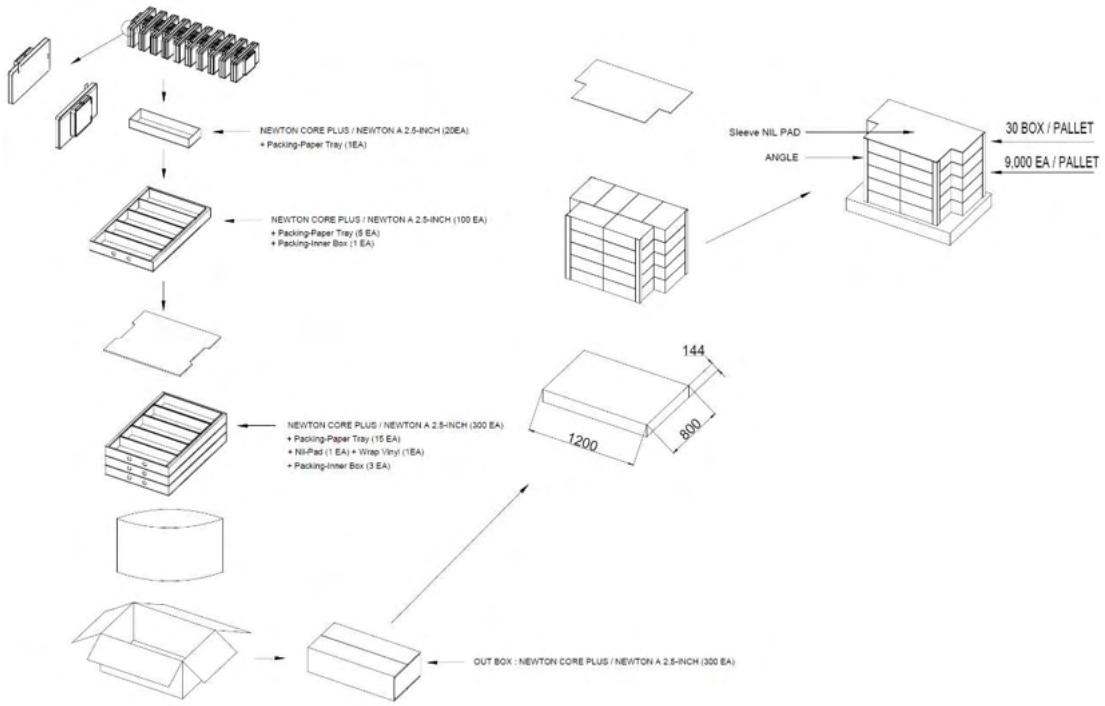

Figure 18. 2.5” PACKING-DIAGRAM (1,200 X 800)

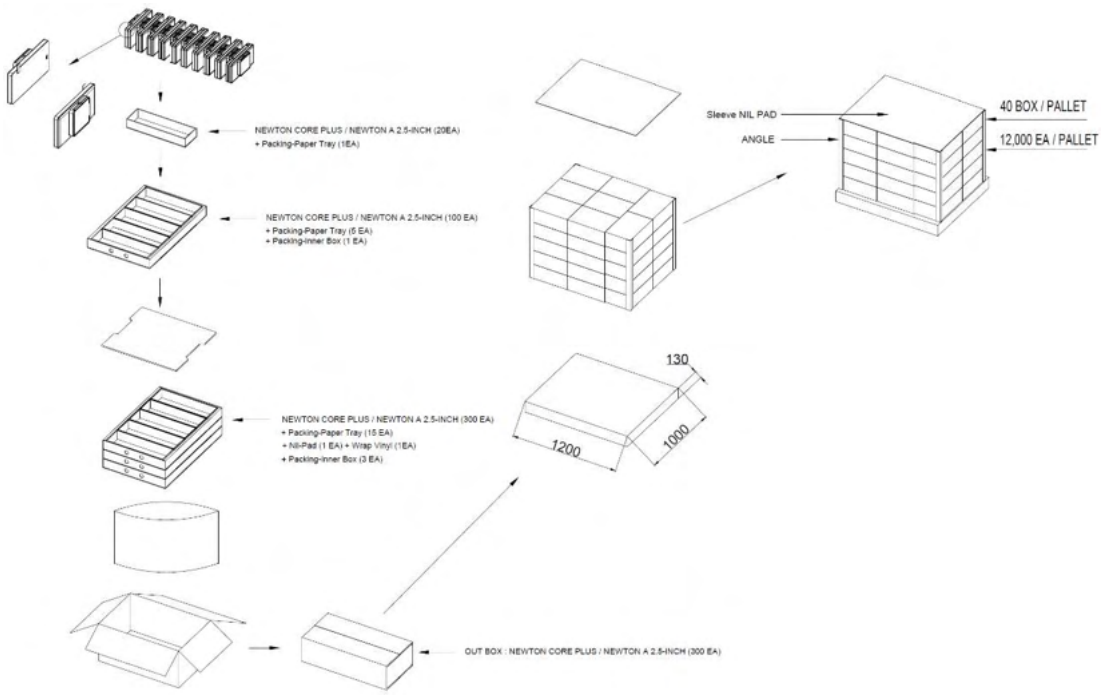

Figure 19. 2.5” PACKING-DIAGRAM (1,200 X 1,000)

4.4. 2.8”

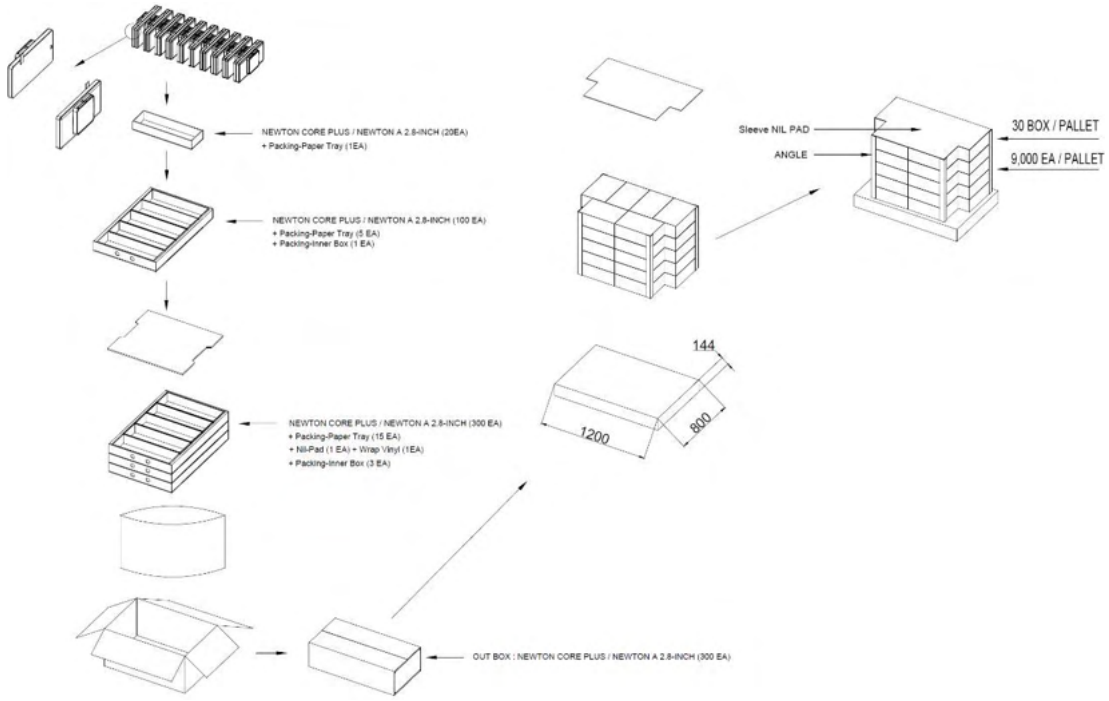

Figure 20. 2.8” PACKING-DIAGRAM (1,200 X 800)

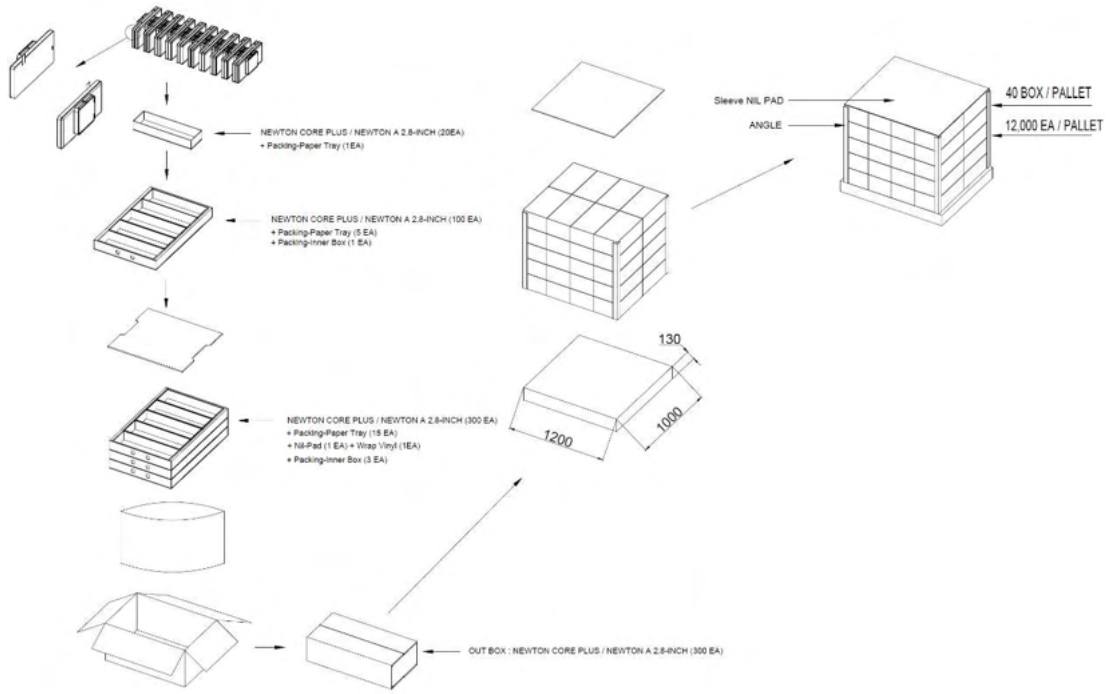

Figure 21. 2.8” PACKING-DIAGRAM (1,200 X 1,000)

4.5. 3.5”

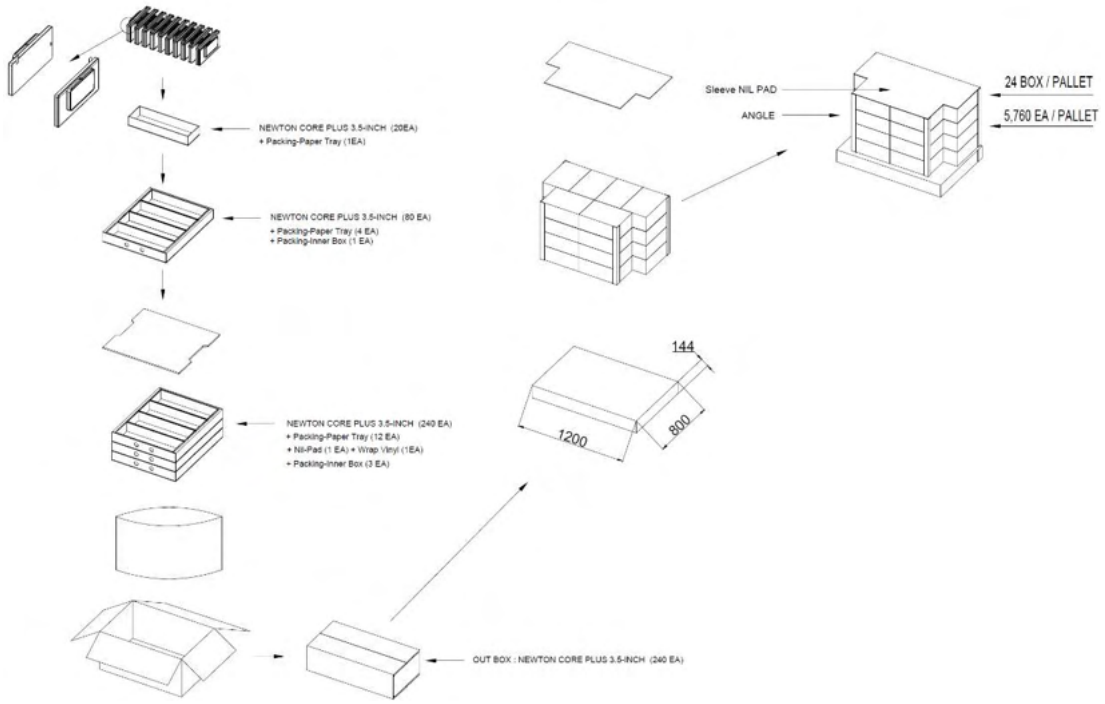

Figure 22. 3.5” PACKING-DIAGRAM (1,200 X 800)

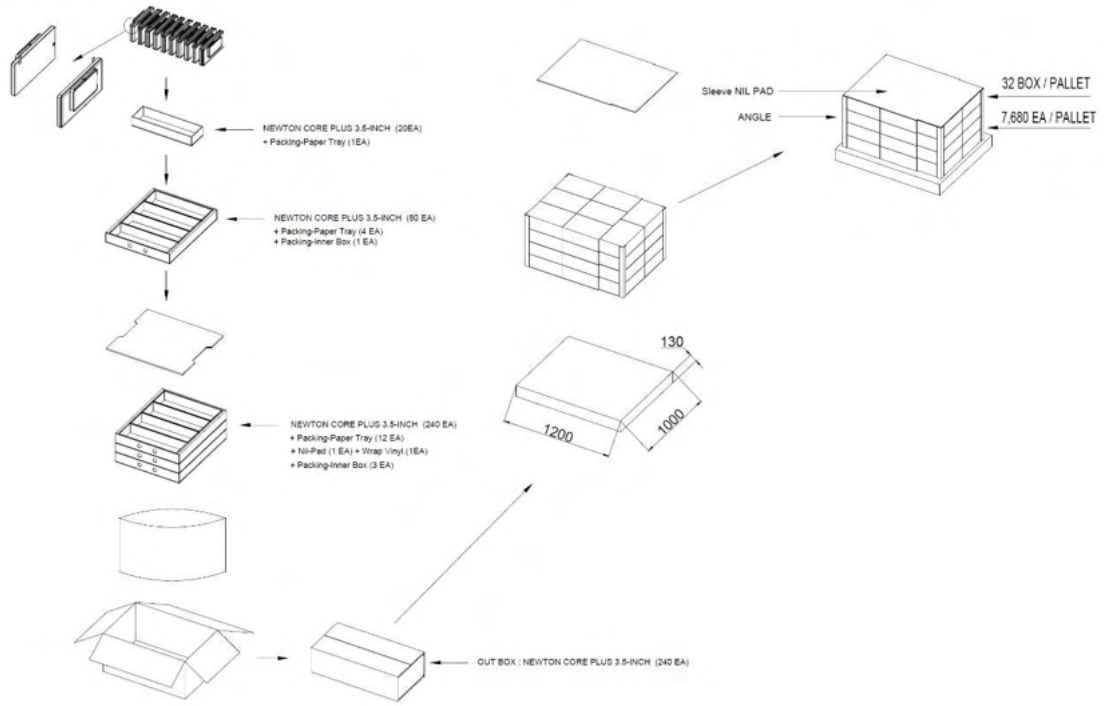

Figure 23. 3.5” PACKING-DIAGRAM (1,200 X 1,000)

4.6. 4.2”

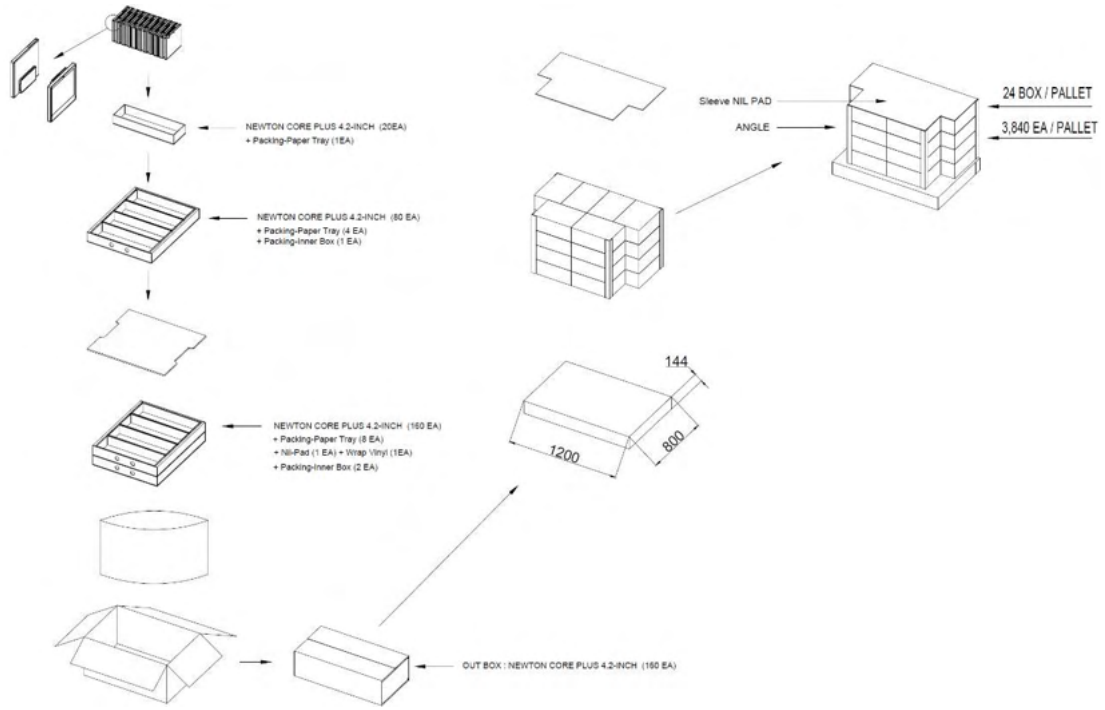

Figure 24. 4.2” PACKING-DIAGRAM (1,200 X 800)

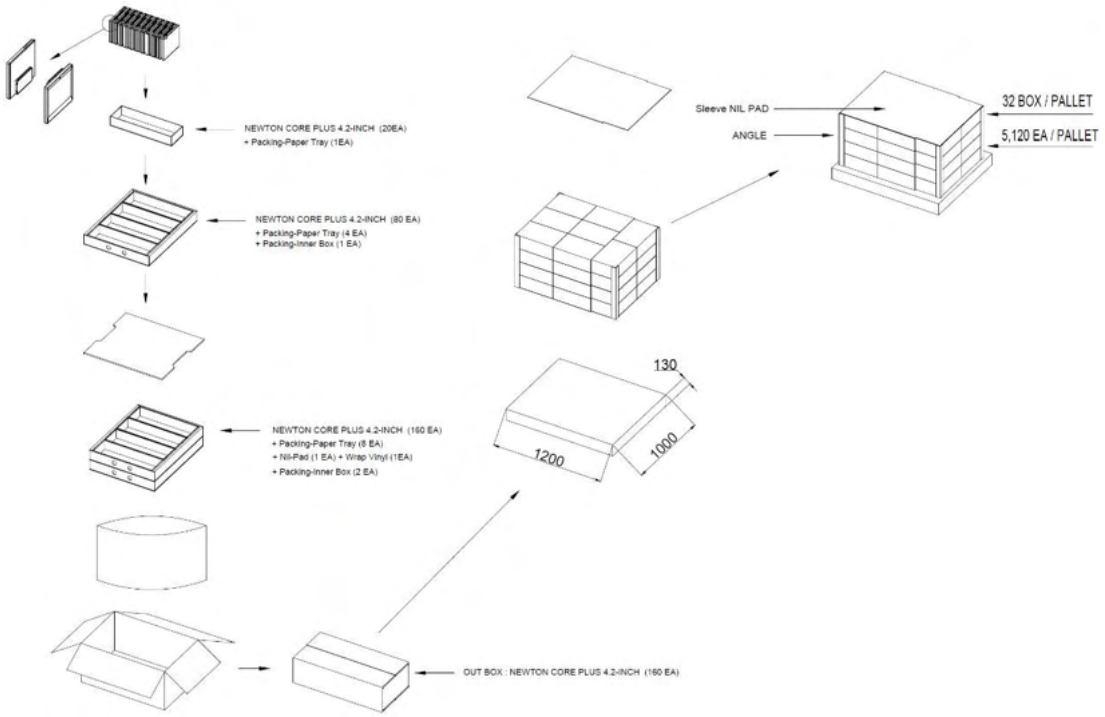

Figure 25. 4.2” PACKING-DIAGRAM (1,200 X 1,000)

4.7. 5.8”

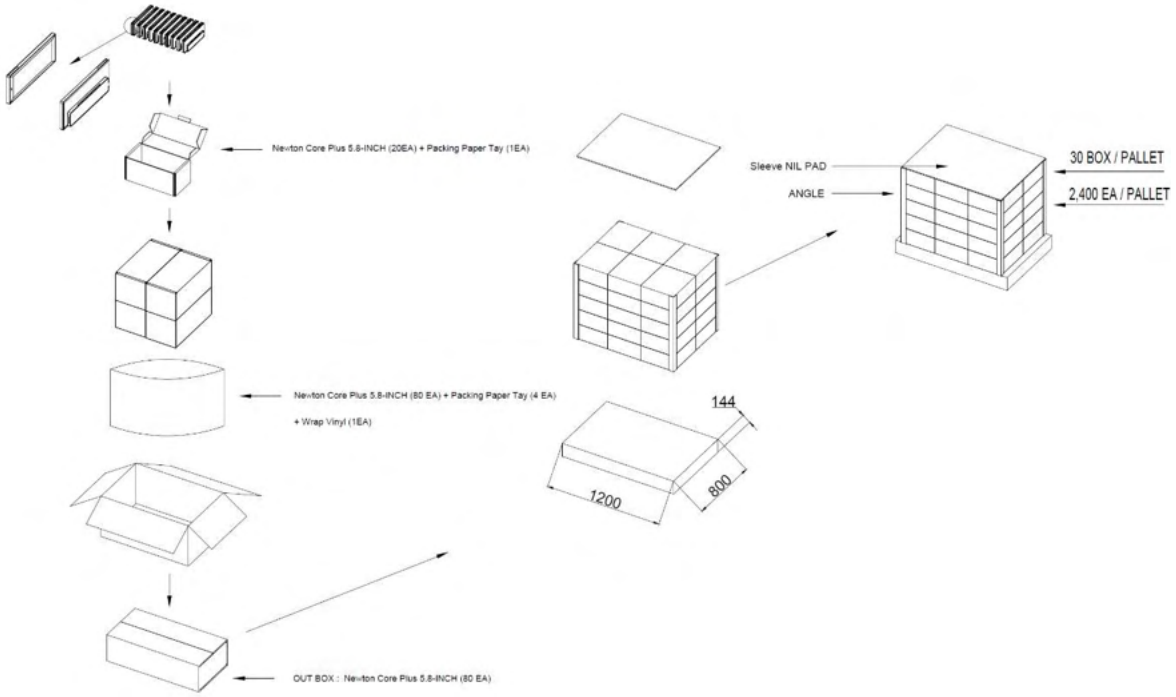

Figure 26. 5.8” PACKING-DIAGRAM (1,200 X 800)

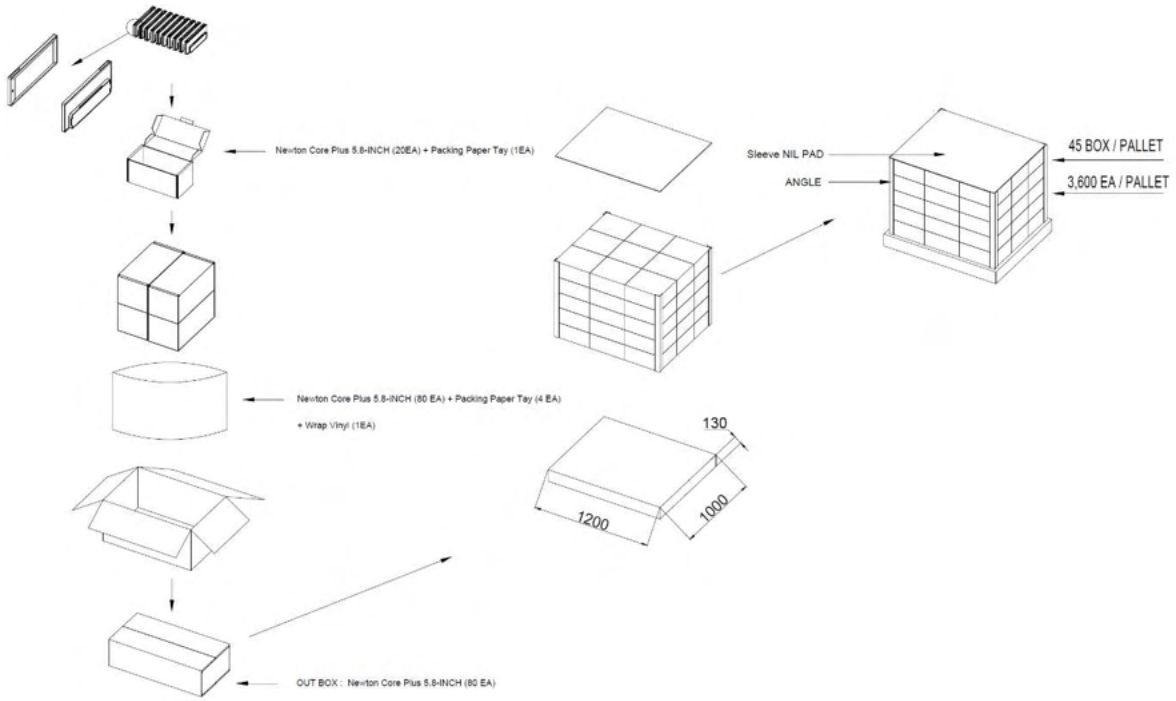

Figure 27. 5.8” PACKING-DIAGRAM (1,200 X 1,000)

4.8. 7.5”

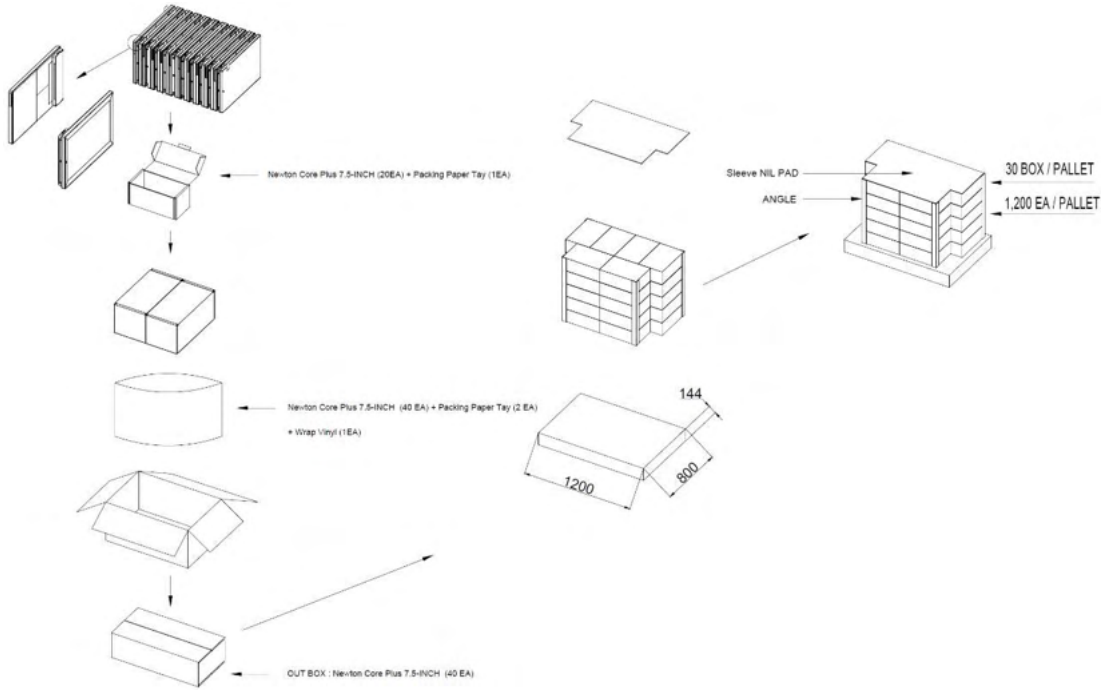

Figure 28. 7.5” PACKING-DIAGRAM (1,200 X 800)

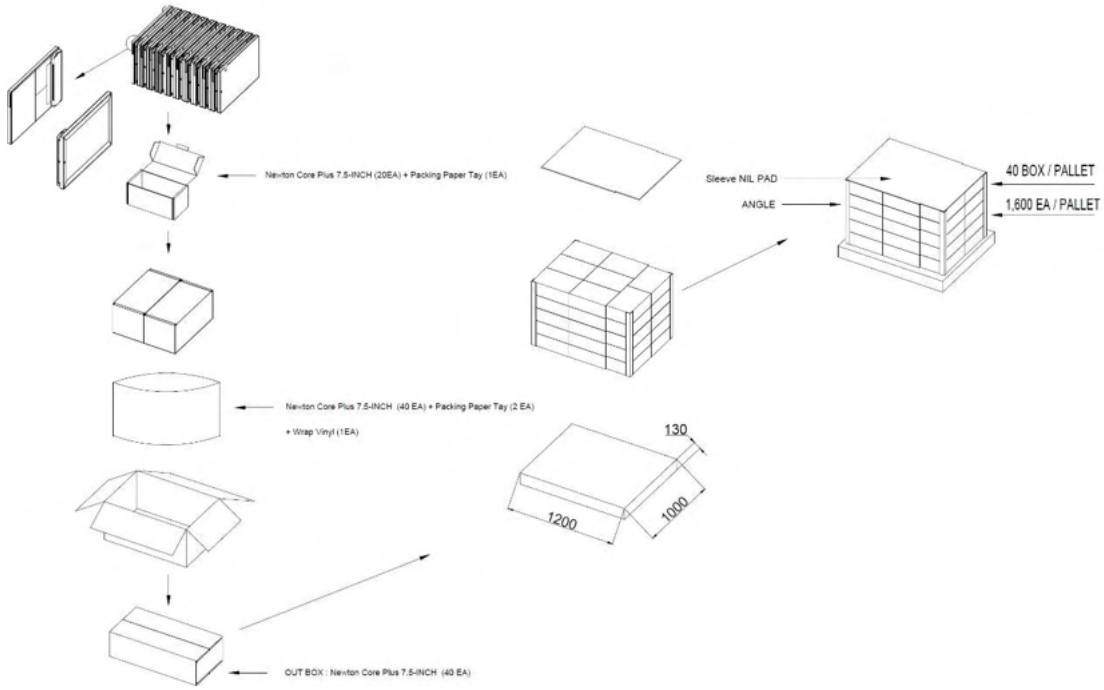

Figure 29. 7.5” PACKING-DIAGRAM (1,200 X 1,000)

5. Reliability Test

- High Temperature Operation
- Low Temperature Operation
- High Temperature/Humidity Operation
- High Temperature Storage
- Temperature Shock (Storage)
- ESD
- Package Drop Test
- Package Random Vibration Test

Test Item	Test Condition	Pass Criteria
High Temp Resistance	60℃ / 35% (240hrs)	Normal operation after test
High Temp Operation	40℃ / 35% (240hrs)	
Thermal Shock	-25℃ (for 30mins) ~ 60℃ (for 30mins) for 240 cycles	
High Temp & Humidity Operation	40℃ / 70% (240hrs)	
Low Temp Operation	0℃ (240hrs)	
ESD Test	TYP. Air ±10KV, 150pF, 330Ω, 10 times/Point	
RF Sensitivity (Communication Distance)	Gateway <-> Tag distance: 100 meters	Tag receives RF signal from Gateway

6. Product Handling Precautions

Provisions should be made to protect against any damage to the product caused by improper handling. The purchaser assumes any responsibility for damage to the product caused by improper handling.

Product should be stored in 32 °F ~ 104 °F (0°C ~ 40°C) @45~70% RH environment and should be installed within **90 days** of receipt.

6.1. Usage Environment

Take extra caution when using this RF device in the vicinity of other electronic devices and appliances. Most electronic devices and appliances use electromagnetic waves. Electromagnetic waves emitted by this RF device can affect other electronic devices and appliances.

If using the device in an explosion hazard area, follow all safety regulations, instructions, and signals.

6.2. Storage and Use

- The product is shipped in sleep mode (displaying a white screen) and can be activated by pressing the button, using an NFC remote control, or via the mobile app.
- Moisture and liquids can damage internal parts and circuit boards if allowed to enter into the device itself.
- Do not place or store the product on a sloped surface. The product may slide and fall off the surface and become damaged.
- Use the product in temperatures ranges of **0℃~40℃/32℉~104℉(BWRY).** Parts and circuits may be damaged if operated or stored in extreme temperature.
- The display panel needs extra care during handling.
  - Do not apply any impacts on the e-Paper display as it is fragile.
  - Continuous exposure to excessive moisture (over 70% RH) or UV shortens display lifetime.
  - Ghosting image may appear in temperature conditions of less than **15℃/59℉ for normal tags.** (If ΔL* >2, we call it ghosting phenomenon)
- Avoid areas with strong magnetism or subject to magnetism. Contact between the device and a magnetic object can lead to malfunctions.
- Do not place the product near heat-producing kitchen appliances like a stove or a microwave or in the vicinity of highly pressurized containers.
- External impact to the product, such as from being dropped, can damage the product.
- Twisting and bending the product can damage the exterior casing and the internal components.
- If this product operates abnormally while removing battery or replacing battery, it needs to be

discharged by contacting the battery terminals (+) and (-) in the product.

- This product uses the 2.4GHz frequency band for the wireless communication network. Radio communications can be limited or affected by other applications that share the same frequency band, such as Wi-Fi, Bluetooth, Zigbee, etc.
- A prior investigation into the radio environment is strongly required for efficient and smooth installation.
- Frequent communications, updates and screen renewals may reduce battery lifetime.
- Low temperature environments may reduce battery life.
- FIFO (First in First Out)

6.3. Product Cleaning

6.3.1. For Spray Cleaning:

Steps

(1) Lightly spray all surfaces and wait a few seconds.

(2) Gently wipe clean using a cloth or tissue.

(3) Let the labels dry.

Notes

- Use mild, non-alcoholic detergents or glass cleaner.
- Recommend non-abrasive cloths: Microfiber, Cotton T-shirt, Cotton handkerchief, Cotton tea towel

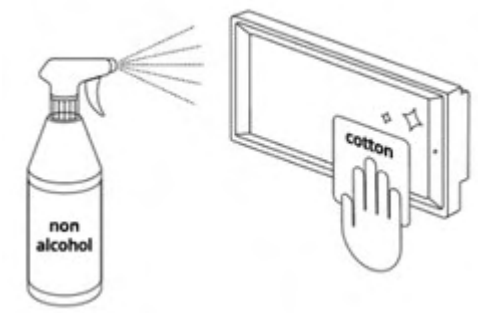

6.3.2. For Wet Tissue Cleaning:

Steps

(1) Stand or lay down the labels.

(2) Wipe using wet tissues.

(3) Let the labels dry.

6.4. Battery Replacement

Audience

- Authorized personnel with the following knowledge are allowed to replace the battery: Battery / Electronic assemblies (e.g. circuit board) / Compliance with the instruction

※ Note: Warranty is voided if battery is replaced by unauthorized personnel. (When batteries require replacement, please contact the authorized personnel)

Instructions

- Risk of short circuit if battery is incorrectly installed/stored.
- Check that hands are dry before and at all times during the replacement Process.
- Keep batteries away from children and infants.
- Do not heat, charge, bend, drop, short-circuit and/or disassemble battery.
- Do not mix together used and new batteries or different battery types.

※ Note: Battery rarely has minor stain or leak.

Steps

(1) Open the battery cover.

(2) Take out the batteries.

(3) Put in the new batteries.

(4) Check the batteries direction.

(5) Put back in the battery cover.

Battery Direction

- Battery
  - Top: (+) Positive
  - Bottom: (-) Negative

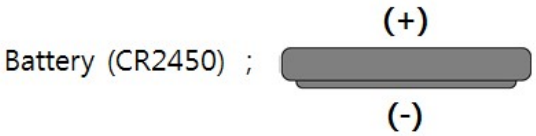

Figure 30. COIN BATTERY DIRECTION

- Battery Pack
  - Red Wire: (+) Positive
  - Black Wire: (-) Negative

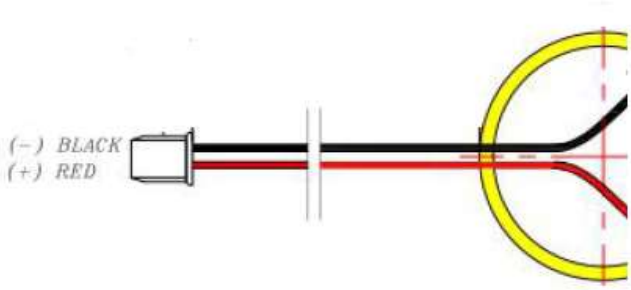

Figure 31. BATTERY PACK DIRECTION

7. Battery Handling Guide

7.1. Avoiding hazards in lithium battery handling

1. Do not short circuit (Fig. 1)

- Direct connection of plus (+) and minus (-) poles may result in leakage, heat generation, explosion and/or fire.
- Do not store and/or carry batteries with metallic items, such as a necklace.

2. Do not stack and/or jumble batteries (Fig. 2)

- Stacked and/or jumbled batteries may cause a short circuit and/or forced discharge from contact with other batteries.
- This may result in leakage, heat generation, explosion and/or fire.

3. Do not make forced discharge batteries (Fig. 3)

- On a forced discharge by an external power source, the battery voltage goes to negative and this causes gas generation in inside of the battery.
- This may result in leakage, heat generation, explosion and/or fire.

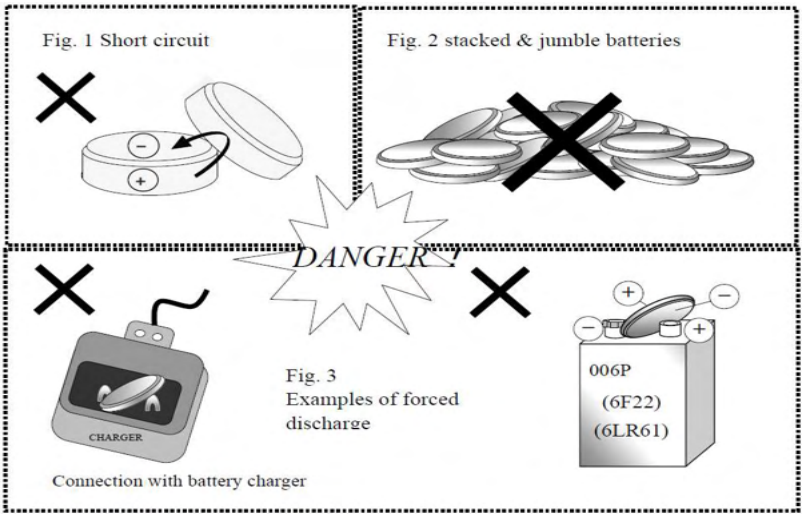

4. Do not dispose of batteries in fire

- Disposal of batteries in fire is extremely dangerous with a risk of explosion and violent flaring.

5. Do not heat batteries

- Heating batteries above 100℃/212°F may damage the resin in crimping, separator and other parts, potentially causing an electrolyte leak, internal short circuit, fire and/or explosion.

6. Do not solder directly onto batteries

- Direct soldering onto batteries may damage the resin in crimping, separator and other parts, potentially causing an electrolyte leak, internal short circuit, fire and/or explosion.

7. Do not recharge batteries

- Recharging of batteries may result in internal gas generation, causing electrolyte leak, battery swelling, fire and explosion.

8. Do not disassemble batteries

- Disassembly of batteries may generate gas that may irritate your throat.
- Lithium may also react with moisture to generate heat and fire.

9. Do not deform batteries

- Applying extreme pressure to batteries may cause deformation of the crimping and internal short circuit, causing electrolyte leak, battery swelling, fire and explosion.

10. Do not mix different type batteries

- For some applications, mixing different types of batteries or new and old batteries, can cause an over discharge due to differences in voltage and discharge capacities.
- This may lead to the risk of swelling and/or explosion.

11. Do not insert batteries with opposite polarity

- For some applications, battery insertion with opposite polarity (reverse insertion of plus and minus) may result in leakage, heat generation, explosion and/or fire.

※ Please ensure the above precautions are strictly observed by related divisions including Production, warehouse, Product technology, sales, quality, customer stores, S/I companies, part-time workers, and external service companies.

7.2. Proper Storing and Disposing of Lithium Batteries

- To minimize risk of fire and explosion of batteries, be sure to follow the instructions below.

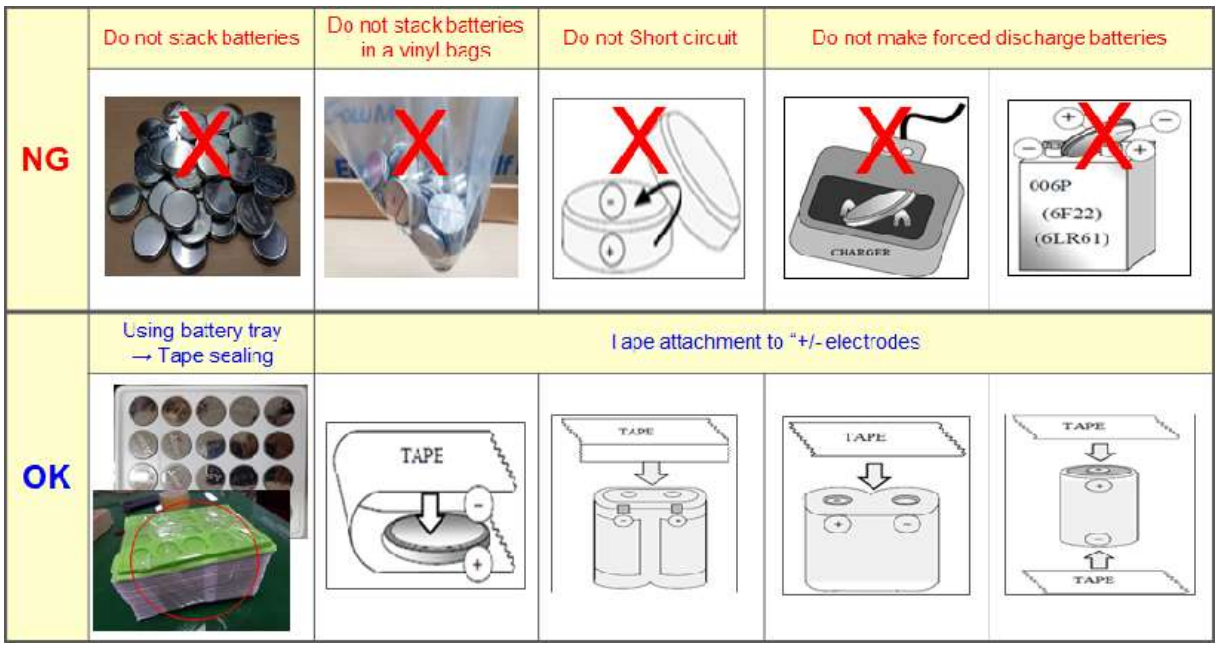

- Proper use of battery tray is outlined below.

With batteries properly placed into each tray slot → stack the trays in the same orientation → use an empty tray on the top stack → tape the stack together to avoid falling apart.

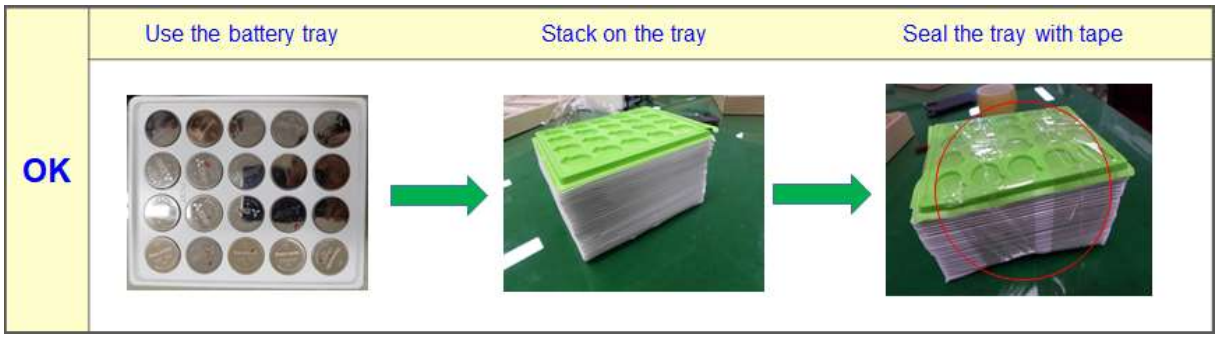

- Follow local regulations for proper battery disposal guidelines.