CUSTOMER APPROVAL SHEET

Company Name	SOLUM
MODEL	2.6, 5.85, 9.7, 12.2 Realtek
CUSTOMER APPROVAL	

☐ **APPROVAL FOR SPECIFICATIONS ONLY (Spec. Ver. 1.0)**

☐ **CUSTOMER REMARK:**

Issued By	Checked By	Approved By
SR. Jang	TH Lee	BY.SEO

SOLUM CO., LTD.

A-6th floor, 357, Guseong-ro, Giheung-gu, Yongin-si, Gyeonggi-do 16674, Korea

Tel: +82-31-8006-7691

NEWTON S-Label Datasheet

REV 1.0

2021-04-23

SOLUM
Digital solution modules provider.

Summary

This datasheet presents the general performance and specifications of NEWTON S-Label for SOLUM Electronic Shelf Label (ESL) System.

© SOLUM. All rights reserved

The names of actual companies and products mentioned herein may be the trademarks of their respective owners.

No part of this document may be reproduced, stored in a retrieval system, or transmitted in any form or by any means without the express written consent of SOLUM

This document is subject to change without notice.

Table of Contents

1 GENERAL DESCRIPTION 5
1.1 FEATURES 6
1.2 TYPICAL APPLICATIONS 6
1.3 APPEARANCE 6
2 SPECIFICATION 7
2.1 PRODUCT SPECIFICATION 7
2.2 RADIO (RF) SPECIFICATION 8
2.3 NFC SPECIFICATION 8
2.4 MECHANICAL DRAWING 9
2.5 LABEL MARKING 144
3 NFC ANTENNA LOCATION 16
4 PACKAGING 17
5 PRODUCT HANDLING PRECAUTIONS 18
5.1 USAGE ENVIRONMENT 18
5.2 STORAGE AND USE 18
5.3 BATTERY REPLACEMENT 19
6 CERTIFICATIONS 211
6.1 OVERVIEW 211
6.2 FCC 211
6.3 CE 222
6.4 IC 222
7 RELIABILITY TEST 233
8 CLEANING 24
10 BATTERY HANDLING GUIDE 25
10.1 AVOIDING HAZARDS IN LITHIUM BATTERY HANDLING 25
10.2 PROPER STORING AND DISPOSING OF LITHIUM BATTERIES 27

Document History

Rev.	Date	Revision History	Page
1.0	23,April, 2021	Initial release	-

1 General Description

NEWTON S-Label product is a part of the SOLUM Electronic Shelf Label (ESL) System, which includes NEWTON S-Label, NEWTON Gateway, and Remote Controller. The ESL System electronically displays customer content (i.e. price, product, and promotion information) on the S-Labels, which have traditionally been printed or written on paper in places such as retail markets and warehouses.

NEWTON S-Label wirelessly receives data from the S-Gate and updates the display with the new information provided.

NEWTON S-Label is based on Bluetooth Low Energy (BLE) for low power wireless communication applications. It consists of an RF transceiver, RF circuitry and the ARM Cortex M3 MCU offering BLE based network protocol, MAC protocol and other peripheral devices.

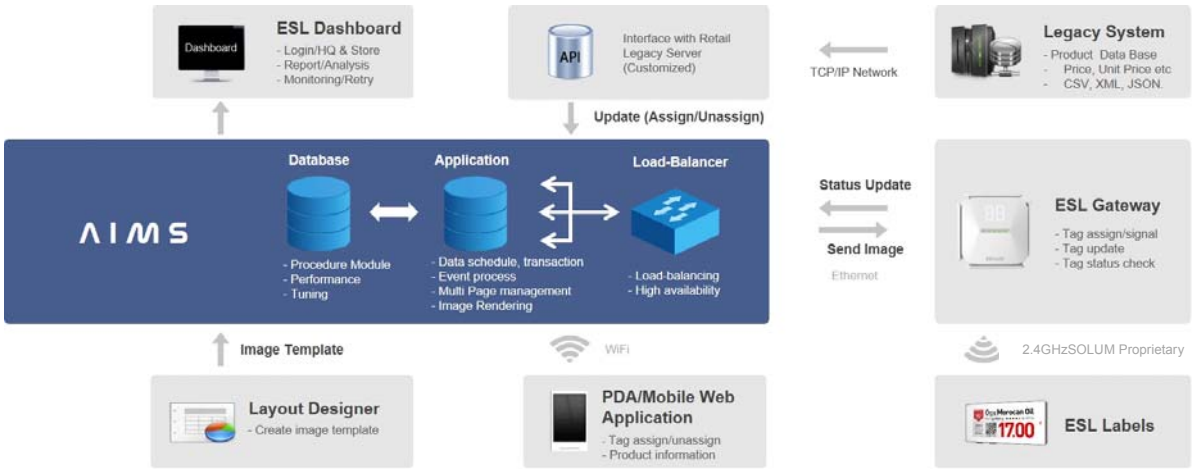

Figure 1. ESL System

1.1 Features

- Display: E-Paper Display (EPD) Active Type
- Sizes: 2.6”, 5.85”, 9.7”,12.2”
- Display Color: BW (Black, White) / BWR (Black, White, Red)
- Wireless Frequency: 2.4 GHz Unlicensed ISM band
- Communication Protocol: BLE physical layer with SOLUM proprietary protocol
- Battery operated low power consumption
- NFC (13.56MHz): Felica ® NFC Forum Type 3
- Up to 7 page display screens
- RoHS compliant

1.2 Typical Applications

- Retail industry with electronic displays, platforms, solutions and services
- Intelligently communicating, managing, and optimizing price and product informations
- Warehouse & factory picking labels

1.3 Appearance

Figure 2. NEWTON S-Label

2 Specification

2.1 Product Specification

Item	Description
Label Sizes	2.6”: **41.7 x 77.2 x 12.8 mm / 1.64 x 3.03 x 12.8 inch** 5.85”: **65.8 x 165.6 x 14.1 mm / 2.59 x 6.51 x 0.55 inch** 5.85” Freezer : **65.8 x 165.7 x 15.6 mm / 2.59 x 6.52 x 0.64 inch** 9.7”: **167.3 x 220.0 x 14.2 mm / 6.58 x 8.66 x 0.55 inch** 12.2”: **215.2 x 261.6 x 8.1 mm / 8.47 x 10.29 x 0.31 inch**
Display Sizes	2.6”: **30.7 x 60.0mm / 1.20 x 2.36 inch** 5.85”: **47.7 x 139.0mm / 1.87 x 5.47 inch** 5.85”Freezer : **47.8 x 139.1 mm / 1.88 x 5.47 inch** 9.7”: **141.1 x 201.6 mm / 5.55 x 7.93 inch** 12.2”: **190.1 x 237.6 mm / 7.48 x 9.35 inch**
Label Weight	2.6”: **42.2** 5.85”: **107.5** 5.85” Freezer: **143.1** 9.7”: **233.2** 12.2”: **408.8**
Battery	CR2450 2pcs: 2.6”, CR2450 4pcs: 5.85”, CR2450 5pcs: 5.85”Freezer CR2450 6pcs: 9.7”, 12.2”
Housing Bezel Color	White
Usable Pages	7pages: 2.6”, 5.85”, 5.85” Freezer , 9.7”, 12.2”
Communication	2.4 GHz Unlicensed ISM band BLE physical layer with SOLUM proprietary protocol
Communication Distance	Radius 30m / 98ft
Operating Temperature	Normal Temperature Labels BWR: 0℃ ~ 40℃ / 32°F~104°F (@45%~70% RH) BWY: 0℃ ~ 30℃ / 32°F~86°F (@45%~70% RH) FREEZER Temperature Labels BW: -25℃ ~ 0℃ / -13°F ~ 32°F
Storage Temperature	All Labels: 0℃~40℃ / 32°F~104°F (@45%~70% RH)

Radio (RF) Specification

Item	Parameter	Specification			Unit	Condition
		Min	Typ	Max		
Tx	Tx Power	-3	0	4	dBm	
	[Carrier Frequency Offset and Drift]	-75	0	75	kHz	
	Tx Current		-	8	mA	Total current at max Tx Power
Rx	Receiver Sensitivity	-85	-	-	dBm	PER < 5%

2.2 NFC Specification

Item	Parameter	Specification			Unit
		Min	Typ	Max	
NFC	Read Distance	-	20	-	mm
		-	0.7	-	in

2.3 Mechanical Drawing

2.3.1 Case Dimension

2.6”
Model

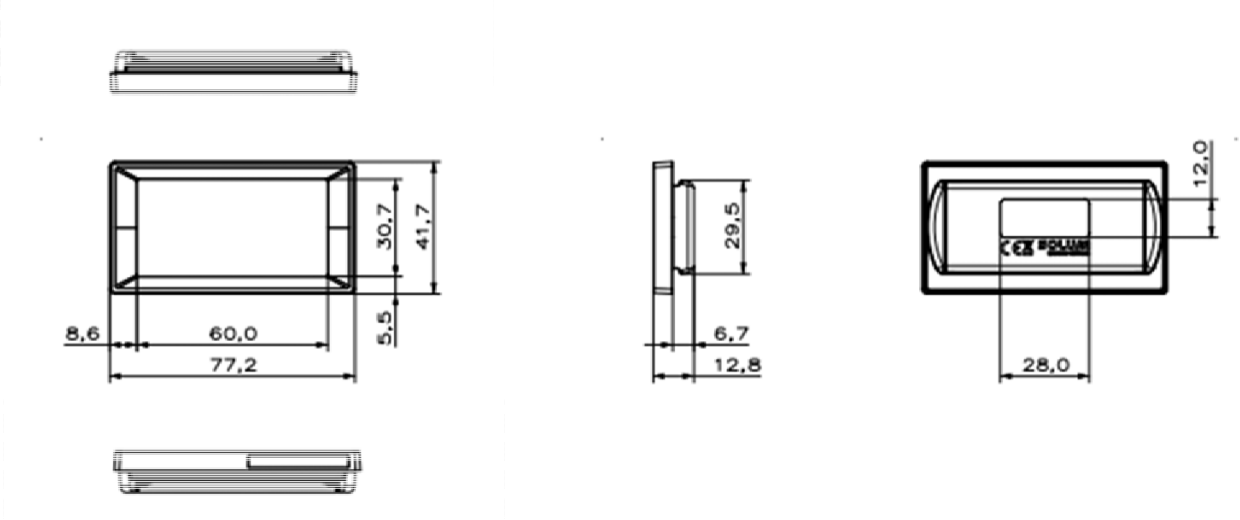

(Unit: mm)

Figure3. 2.6” Mechanical Dimension

5.85”
Model

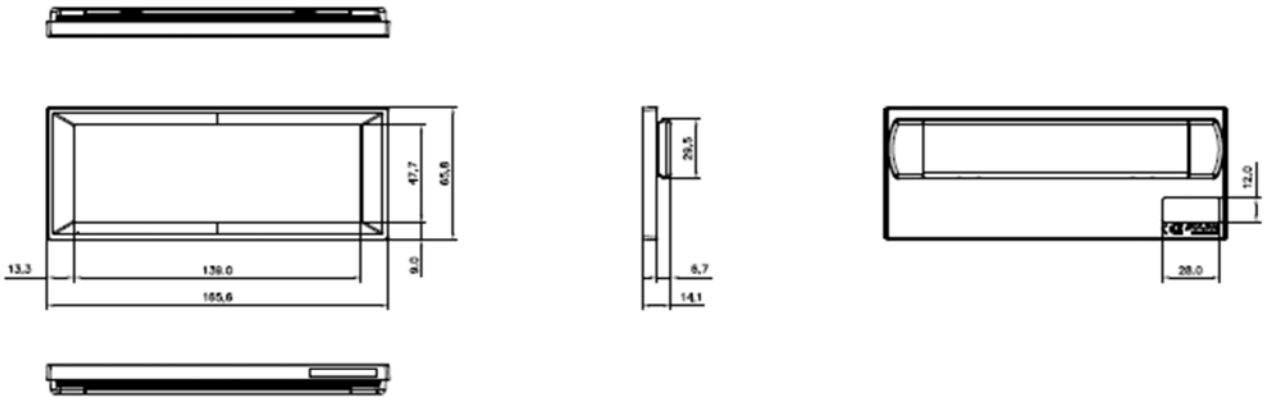

(Unit: mm)

Figure 4. 5.85” Mechanical Dimension

5.85” Freezer
Model

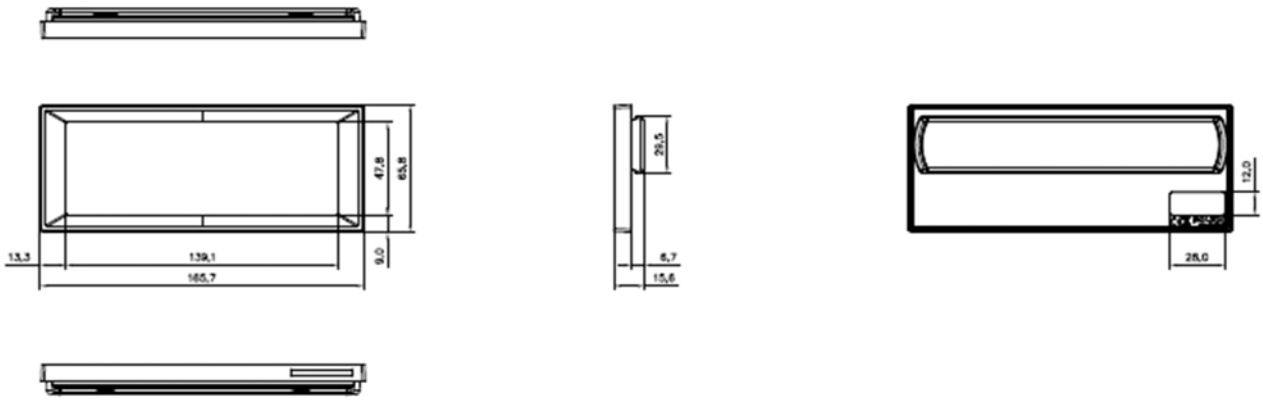

(Unit: mm)

Figure 5. 5.85”Freezer Mechanical Dimension

9.7”
Model

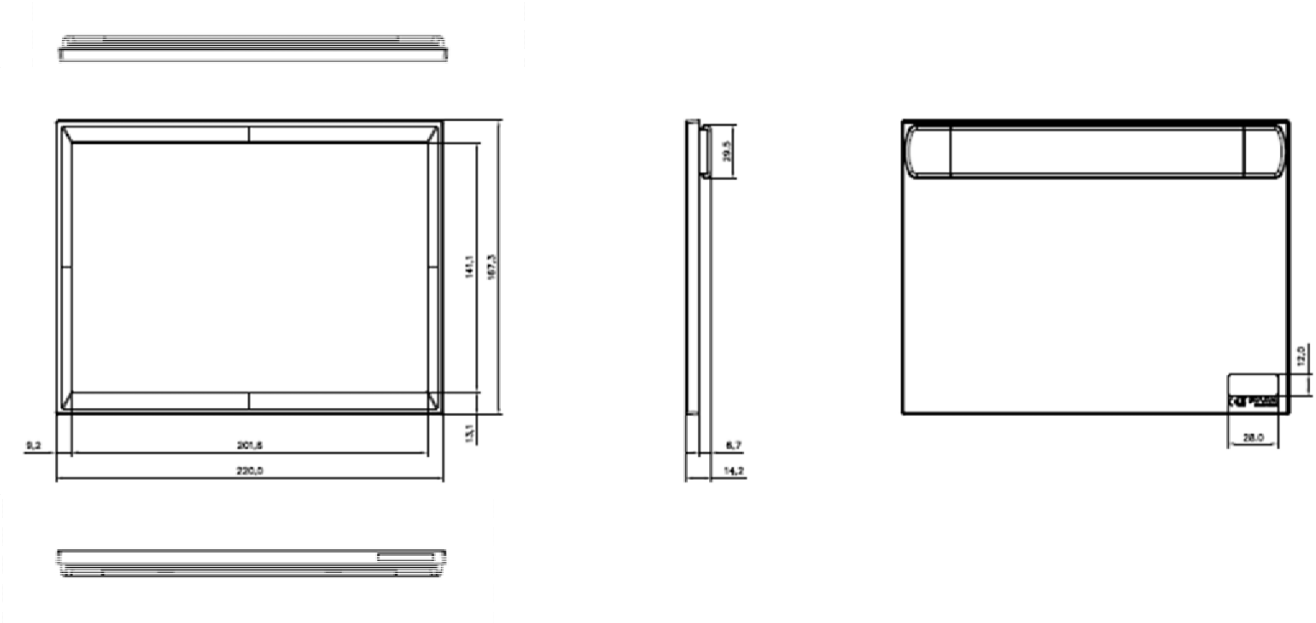

(Unit: mm)

Figure 6. 9.7” Mechanical Dimension

12.2”
Model

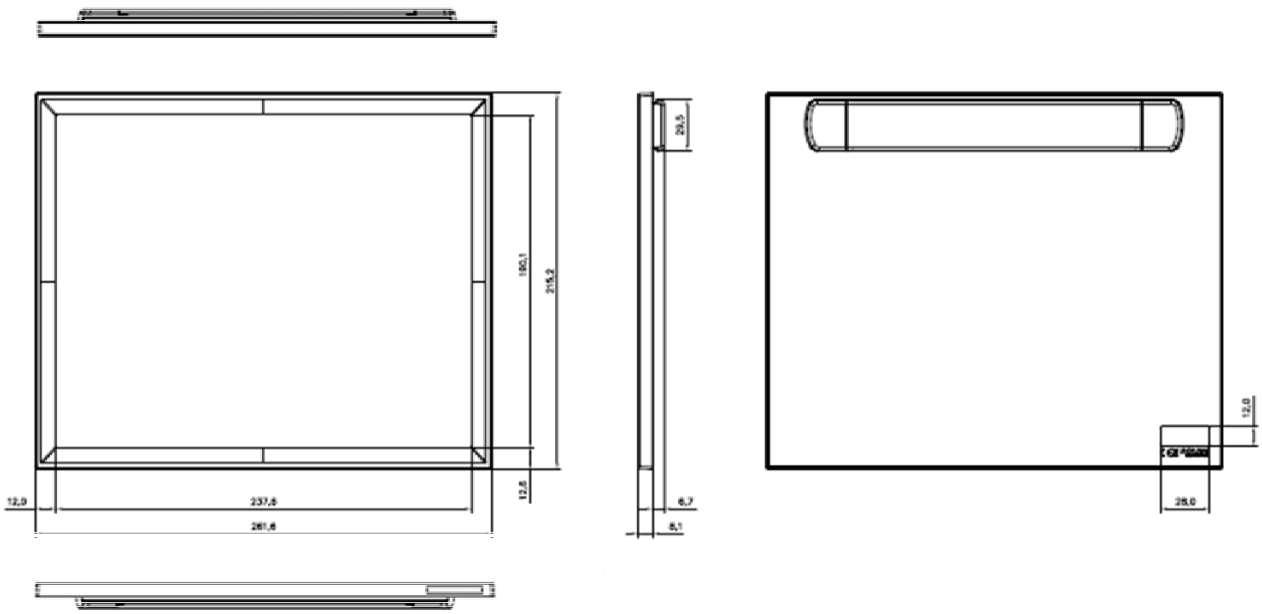

(Unit: mm)

Figure 7. 12.2” Mechanical Dimension

2.4 Label Marking

2.4.1 Product Info and MAC Display in S-Label

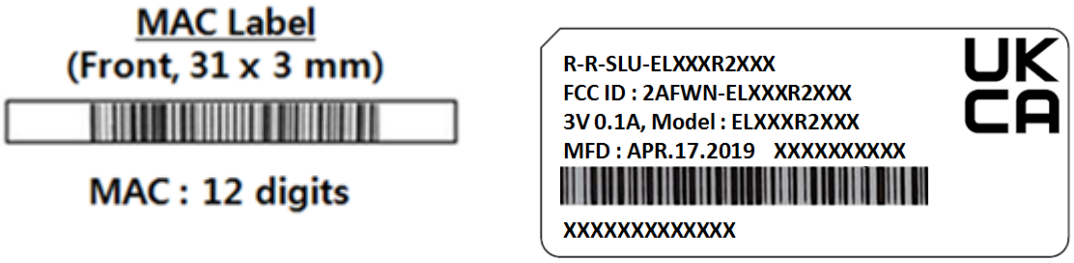

Figure 8. Product and MAC Labels

Product information is indicated on the sticker label of the S-Labels. The information consists of MODEL (model name), MFD (manufacturing date), S/N (serial number), MAC (MAC address), CE certification mark, FCC ID and Manufacturer (SOLUM).

1) Model Name: EL-①②③**H2**④⑤⑥ (i.e. EL016H3WRA)

- EL: Label
- ① ② ③: Label Display size

  016=1.6”

  029=2.9”

  .
- ④: Label Case Color

  W - WHITE

  B – BLACK

  .
- ⑤ Label Display-Color

  M - Mono Label (BW)

  R - Red Color Label (BWR)

  Y - Yellow Color Label (BWY)

  .
- ⑥: Label Type (NFC, LED, etc.)

	Freezer Label (BW)			Red Color Label (BWR)		
	WHITE	BLACK	GRAY	WHITE	BLACK	GRAY
2.6"				EL026R2WRN	EL026R2BRN	EL026R2CRN
5.85"	ELF58R2WMN	ELF58R2BMN	ELF58R2CMN	ELD58R2WRN	ELD58R2WRN	EL026R2CRN
9.7"				EL097R2WRN	EL058R2WRN	EL026R2CRN
12.2"				EL122R2WRN	EL058R2WRN	EL026R2CRN

2) MFD: (Month).(Date).(Year) i.e. JAN.26.2020
3) S/N: Serial Number Information (See Section 2.5.1)

3 NFC Antenna Location

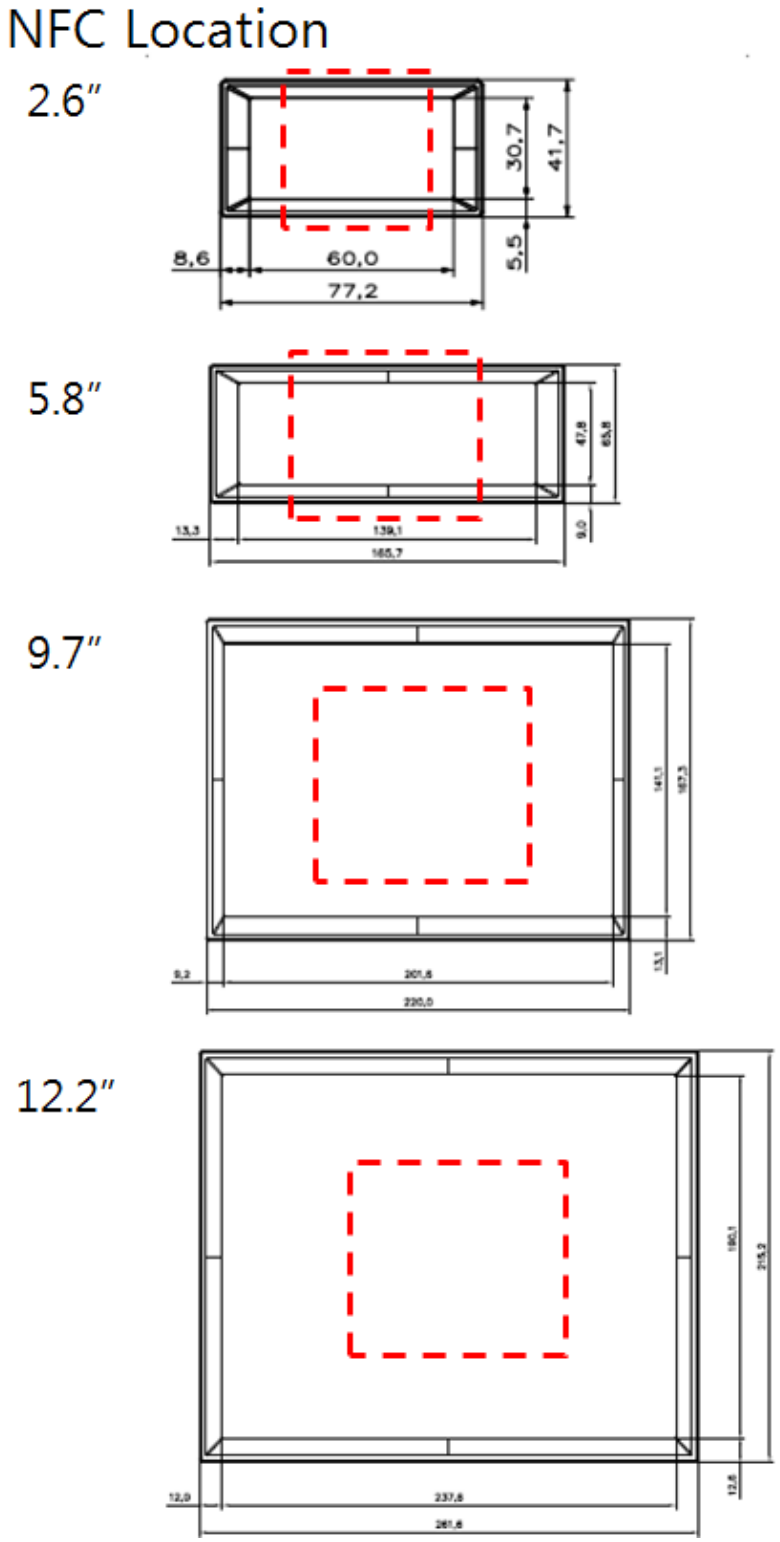

4 Packaging

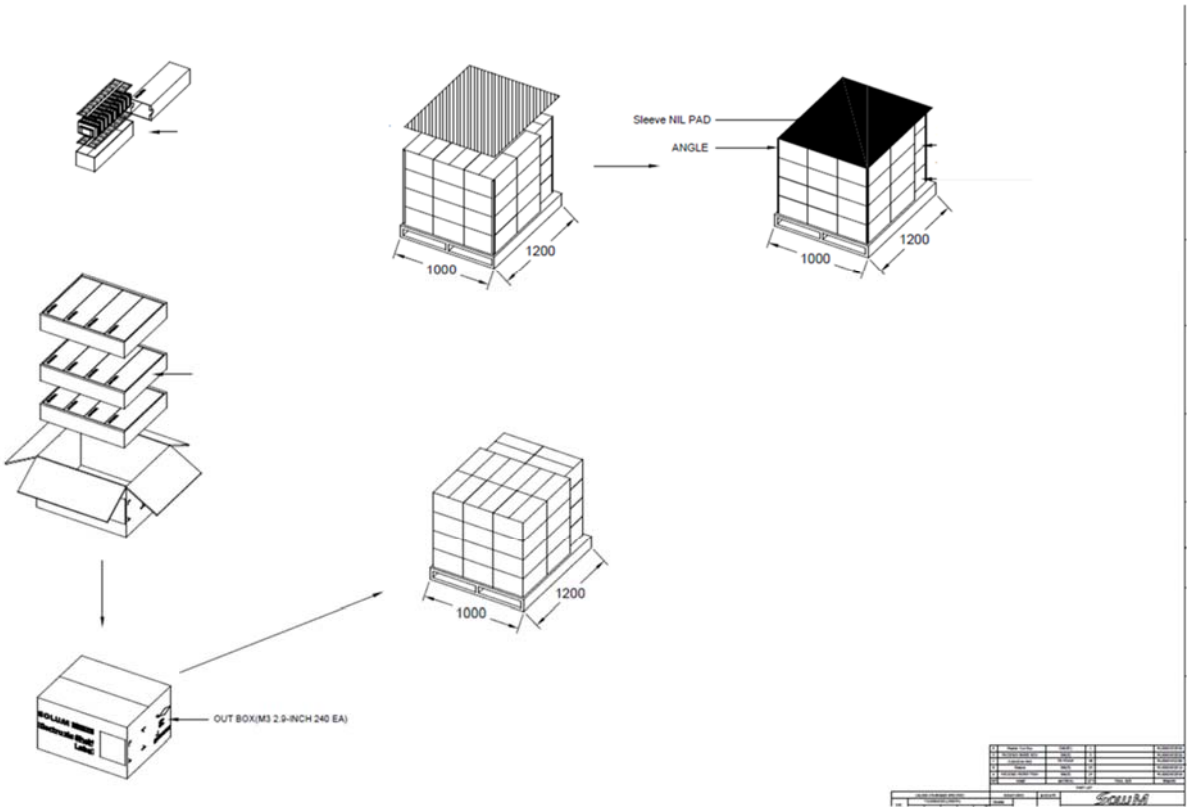

Figure 9. Package

5 Product Handling Precautions

Provisions should be made to protect against any damage to the product caused by improper handling. The purchaser assumes any responsibility for damage to the product caused by improper handling.

It is highly recommended that the product should be installed within **3 months** from the date of arrival into the logistics hub. The recommended storage environment is **0℃~40℃ / 32~104 ℉, 45%-70% RH**.

5.1 Usage Environment

Take extra cautions when using this RF device in the vicinity of other electronic devices and appliances. Most electronic devices and appliances use electromagnetic waves. Electromagnetic waves emitted by this RF device can affect other electronic devices and appliances.

If using the device in an explosion hazard area, follow all safety regulations, instructions, and signals.

5.2 Storage and Use

- Moisture and liquids can damage internal parts and circuit boards if allowed to enter into the device itself.
- Do not place or store the product on a sloped surface. The product may slide and fall off the surface and become damaged.
- Use the product in temperatures ranges of **0℃~40℃/32~104℉(BWR), 0℃~30℃/32~86℉ (BWY), or -25℃~0℃/-13~32℉(Freezer)**. Parts and circuits may be damaged if operated or stored in extreme temperature.
- The display panel needs extra care during handling.
  - Do not apply any impacts on the e-Paper display as it is fragile.
  - Continuous exposure to excessive moisture (over 70% RH) or UV shortens display lifetime.
  - Ghosting image may appear in temperature conditions of less than **15℃/59℉ for normal tags and -25℃/ -13℉ for freezer tags**. (If △L* >2, we call it ghosting phenomenon)
- Avoid areas with strong magnetism or subject to magnetism.
  Contact between the device and a magnetic object can lead to malfunctions.
- Do not place the product near heat-producing kitchen appliances like a stove or a microwave or in the vicinity of highly pressurized containers.
- External impact to the product, such as from being dropped, can damage the product.
- Twisting and bending the product can damage the exterior casing and the internal components.

- If this product operates abnormally while removing battery or replacing battery, it needs to be discharged by contacting the battery terminals (+) and (-) in the product.
- This product uses the 2.4GHz frequency band for the wireless communication network. Radio communications can be limited or affected by other applications that share the same frequency band, such as WiFi, Bluetooth, Zigbee, etc.
- A prior investigation into the radio environment is strongly required for efficient and smooth installation.
- Frequent communications, updates and screen renewals may reduce battery life time.
- Low temperature environments may reduce battery life.
- FIFO(First In First Out)

5.3 Battery Replacement

Audience

- Authorized personnel with the following knowledge are allowed to replace the battery:
  Battery / Electronic assemblies (e.g. circuit board) / Compliance with the instruction

※ Note: Warranty is voided if battery is replaced by unauthorized personnel.
(When batteries require replacement, please contact the authorized personnel)

Instructions

- Risk of short circuit if battery is incorrectly installed/stored.
- Check that hands are dry before and at all times during the replacement process.
- Keep batteries away from children and infants.
- Do not heat, charge, bend, drop, short-circuit and/or disassemble battery.
- Do not mix together used and new batteries or different battery types.

※ Note: Battery rarely has minor stain or leak.

Steps

① Open the battery cover.
② Take out the batteries.
③ Put in the new batteries.
④ Check the batteries direction.
⑤ Put back in the battery cover.

Battery Directional

Red Wire: (+) Positive

Black Wire: (-) Negative

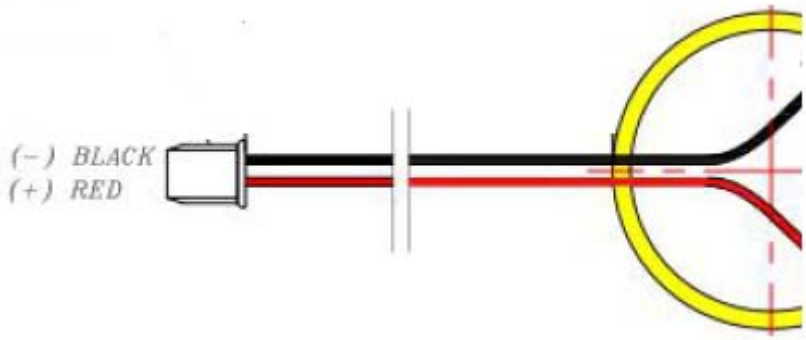

Battery Pack

Figure 10. Battery Directional

6 Certifications

6.1 Overview

Size	Model	FCC	IC	CE*	TELEC	KC	IP67**
2.6"	EL026R2WRN			o			
5.85"	ELD58R2WRN			o			
5.85"F	ELF58R2WMN			o			
9.7"	EL097R2WRN			o			
12.2"	EL122R2WRN			o			

- Food contact test passed

- IEC 62471 standard (Photobiological Safety of Lamps and Lamp Systems) compliant

***CE: RF/EMC/LVD/RoHS2**

6.2 FCC

WARNING: This equipment may generate or use radio frequency energy. Changes or modifications to this equipment may cause harmful interference unless the modifications are expressly approved in the instruction manual. The user could lose the authority to operate this equipment if an unauthorized change or modification is made.

This device complies with part 15 of the FCC Rules. Operation is subject to the following two conditions: (1) This device may not cause harmful interference, and (2) this device must accept any interference received, including interference that may cause undesired operation.

NOTE: This equipment has been tested and found to comply with the limits for a Class B digital device, pursuant to part 15 of the FCC Rules. These limits are designed to provide reasonable protection against harmful interference in a residential installation This equipment generates, uses and can radiate radio frequency energy and, if not installed and used in accordance with the instructions, may cause harmful interference to radio communications, However, there is no guarantee that interference will not occur in a particular installation. If this equipment does cause harmful interference to radio or television reception, which can be determined by turning the equipment off and on, the user is encouraged to try to correct the interference by one or more of the following measures:

- Reorient or relocate the receiving antenna.
- Increase the separation between the equipment and receiver.
- Connect the equipment into an outlet on a circuit different from that to which the receiver is

connected.

- Consult the dealer or an experienced radio/TV technician for help.

"IMPORTANT NOTE : FCC RF Radiation Exposure Statement

This equipment complies with FCC RF radiation exposure limits set forth for an uncontrolled environment.

This equipment should be installed and operated with a minimum distance of 20 centimeters between the radiator and your body. This transmitter must not be co-located or operating in conjunction with any other antenna or transmitter."

6.3 CE

We hereby declare under our sole responsibility that the electrical product above is in compliance with the essential requirements of the Radio Equipment Directive (2014/53/EU) by application of

EN 60950-1:2006+A11:2009+A1:2010+A12:2011+A2:2013

EN 62479:2010

EN 301 489-1 V2.2.0

EN 301 489-17 V3.2.0

EN 300 328 V2.2.2

and the Directive (2011/65/EU) on the restriction of the use of certain hazardous substances in electrical and electronic equipment by application of EN 62321 Series.

6.4 IC

This device complies with Industry Canada license-exempt RSS standard(s). Operation is subject to the following two conditions: (1) this device may not cause interference, and (2) this device must accept any interference, including interference that may cause undesired operation of the device.

7 Reliability Test

High Temperature Operation

Low Temperature Operation

High Temperature/Humidity Operation

High Temperature Storage

Temperature Shock (Storage)

ESD

Package Drop Test

Package Random Vibration Test

8 Cleaning

For Spray Cleaning:

Steps

① Lightly spray all surfaces and wait a few seconds.

② Gently wipe clean using a cloth or tissue.

③ Let the labels dry.

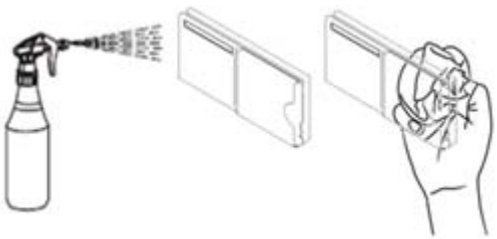

Notes:

- Use mild, non-alcoholic detergents or glass cleaner.
- Recommend non-abrasive cloths: Microfiber, Cotton T-shirt, Cotton handkerchief, Cotton tea towel

For Wet Tissue Cleaning:

Steps

① Stand or lay down the labels.

② Wipe using wet tissues.

③ Let the labels dry.

9 Battery Handling Guide

9.1 Avoiding hazards in lithium battery handling

1. Do not short circuit (Fig. 1)

. Direct connection of plus (+) and minus (-) poles may result in leakage, heat generation, explosion and/or fire.

. Do not store and/or carry batteries with metallic items, such as a necklace.

2. Do not stack and/or jumble batteries (Fig. 2)

. Stacked and/or jumbled batteries may cause a short circuit and/or forced discharge from contact with other batteries.

. This may result in leakage, heat generation, explosion and/or fire.

3. Do not make forced discharge batteries (Fig. 3)

. On a forced discharge by an external power source,
the battery voltage goes to negative and
this causes gas generation in inside of the battery.

. This may result in leakage, heat generation,
explosion and/or fire.

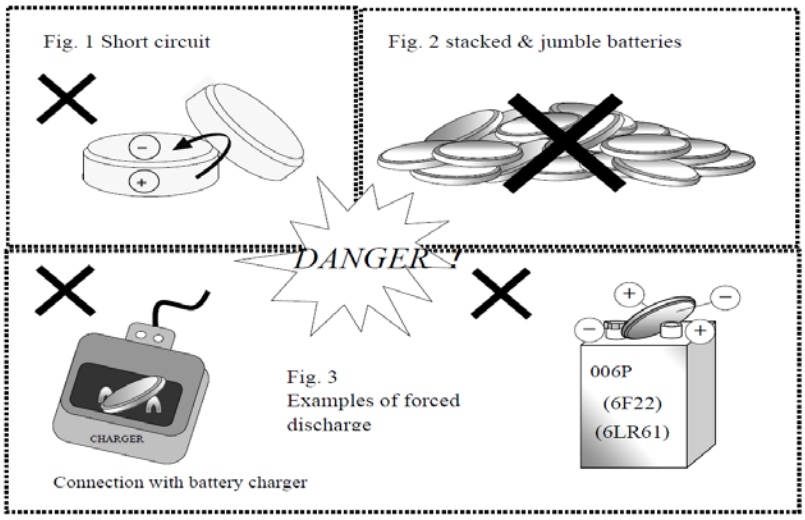

Fig. 3
Examples of forced discharge

4. Do not dispose of batteries in fire

. Disposal of batteries in fire is extremely dangerous with a risk of explosion and violent flaring.

5. Do not heat batteries

. Heating batteries above 100℃/212°F may damage the resin in crimping, separator and other parts, potentially causing an electrolyte leak, internal short circuit, fire and/or explosion.

6. Do not solder directly onto batteries

. Direct soldering onto batteries may damage the resin in crimping, separator and other parts, potentially causing an electrolyte leak, internal short circuit, fire and/or explosion.

7. Do not recharge batteries

. Recharging of batteries may result in internal gas generation, causing electrolyte leak, battery swelling, fire and explosion.

8. Do not disassemble batteries

. Disassembly of batteries may generate gas that may irritate your throat.

. Lithium may also react with moisture to generate heat and fire.

9. Do not deform batteries

. Applying extreme pressure to batteries may cause deformation of the crimping and internal short circuit, causing electrolyte leak, battery swelling, fire and explosion.

10. Do not mix different type batteries

. For some applications, mixing different types of batteries or new and old batteries, can cause an overdischarge due to differences in voltage and discharge capacities.

. This may lead to the risk of swelling and/or explosion.

11. Do not insert batteries with opposite polarity

. For some applications, battery insertion with opposite polarity (reverse insertion of plus and minus) may result in leakage, heat generation, explosion and/or fire.

※ Please ensure the above precautions are strictly observed by related divisions including production, warehouse, product technology, sales, quality, customer stores, S/I companies, part-time workers, and external service companies.

9.2 Proper Storing and Disposing of Lithium Batteries

■ To minimize risk of fire and explosion of batteries, be sure to follow the instructions below.

NG	Do not stack batteries	Do not stack batteries in a vinyl bags	Do not Short circuit	Do not make forced discharge batteries	
					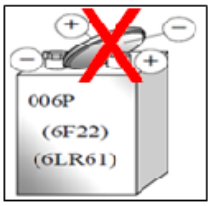
OK	Using battery tray → Tape sealing	Tape attachment to "+/- electrodes			
	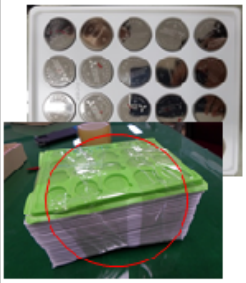	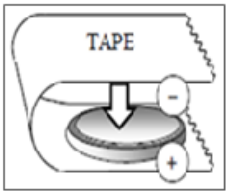	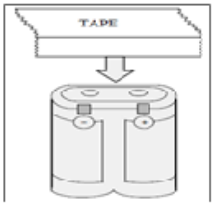	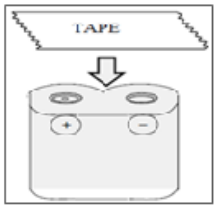	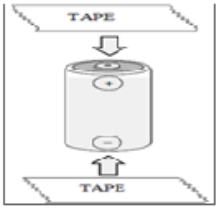

■ Proper use of battery tray is outlined below.

With batteries properly placed into each tray slot ➔ stack the trays in the same orientation ➔ use an empty tray on the top stack ➔ tape the stack together to avoid falling apart.

OK	Use the battery tray	Stack on the tray	Seal the tray with tape

■ Follow local regulations for proper battery disposal guideline.