SOLUM Newton Gateway User Manual

SLG-EN102S

SOLUM E-Label Platform

REV 1.6

SOLUM

06-11-2021

SUMMARY

This documentation is intended as a guide for the usage and installation of SOLUM Newton Gateway.

© 2021 SOLUM. All rights reserved

The names of actual companies and products mentioned herein may be the trademarks of their respective owners.

No part of this document may be reproduced, stored in a retrieval system, or transmitted in any form or by any means without the express written consent of SOLUM.

This document is subject to change without notice.

THE SPECIFICATIONS AND INFORMATION REGARDING THE PRODUCTS IN THIS MANUAL ARE SUBJECT TO CHANGE WITHOUT NOTICE. ALL STATEMENTS, INFORMATION, AND RECOMMENDATIONS IN THIS MANUAL ARE BELIEVED TO BE ACCURATE BUT ARE PRESENTED WITHOUT WARRANTY OF ANY KIND, EXPRESS OR IMPLIED. USERS MUST TAKE FULL RESPONSIBILITY FOR THEIR APPLICATION OF ANY PRODUCTS.

THE SOFTWARE LICENSE AND LIMITED WARRANTY FOR THE ACCOMPANYING PRODUCT ARE SET FORTH IN THE INFORMATION PACKET THAT SHIPPED WITH THE PRODUCT AND ARE INCORPORATED HEREIN BY THIS REFERENCE. IF YOU ARE UNABLE TO LOCATE THE SOFTWARE LICENSE OR LIMITED WARRANTY, CONTACT YOUR SOLUM REPRESENTATIVE FOR A COPY.

NOTWITHSTANDING ANY OTHER WARRANTY HEREIN, ALL DOCUMENT FILES AND SOFTWARE OF THESE SUPPLIERS ARE PROVIDED “AS IS" WITH ALL FAULTS.SOLUM AND THE ABOVE-NAMED SUPPLIERS DISCLAIM ALL WARRANTIES, EXPRESSED OR IMPLIED, INCLUDING, WITHOUT LIMITATION, THOSE OF MERCHANTABILITY, FITNESS FOR A PARTICULAR PURPOSE AND NONINFRINGEMENT OR ARISING FROM A COURSE OF DEALING, USAGE, OR TRADE PRACTICE.

IN NO EVENT SHALL SOLUM OR ITS SUPPLIERS BE LIABLE FOR ANY INDIRECT, SPECIAL, CONSEQUENTIAL, OR INCIDENTAL DAMAGES, INCLUDING, WITHOUT LIMITATION, LOST PROFITS OR LOSS OR DAMAGE TO DATA ARISING OUT OF THE USE OR INABILITY TO USE THIS MANUAL, EVEN IF SOLUM OR ITS SUPPLIERS HAVE BEEN ADVISED OF THE POSSIBILITY OF SUCH DAMAGES

Any Internet Protocol (IP) addresses and phone numbers used in this document are not intended to be actual addresses and phone numbers. Any examples, command display output, network topology diagrams, and other figures included in the document are shown for illustrative purposes only. Any use of actual IP addresses or phone numbers in illustrative content is unintentional and coincidental.

SoluM and the SoluM logo are trademarks or registered trademarks of SoluM and/or its affiliates in the KOREA. and other countries Third-party trademarks mentioned are the property of their respective owners. The use of the word partner does not imply a partnership relationship between SoluM and any other company.

©2016-2021 SOLUM Co Ltd, Inc. All rights reserved.

TABLE OF CONTENTS

1 PREFACE 5

1.1 ABOUT THIS GUIDE 5

1.2 AUDIENCE 5

1.3 ABBREVIATIONS AND ACRONYMS 5

2 OVERVIEW 6

3 SPECIFICATIONS 7

3.1 GENERAL SPECIFICATIONS 7

3.2 RADIO FREQUENCY SPECIFICATIONS 7

3.3 POWER SPECIFICATIONS 8

4 DESCRIPTION 9

4.1 GATEWAY EXTERIOR 9

4.2 LED STATUS 10

5 INSTALLATION 11

5.1 BRACKET INSTALLATION 11

5.2 CEILING MOUNT 12

5.3 POLE MOUNT 13

6 PRECAUTIONS 14

6.1 USAGE ENVIRONMENT 14

6.2 STORAGE AND USE 14

DOCUMENT HISTORY

Rev	Date	Revision History	Page
0.1	Feb 21, 2020	Draft	-
1.0	Feb 27, 2020	First Edition	-
1.1	Feb 28, 2020	Added package weight Installation steps modified LED definition updated	-
1.2	Jan 28, 2021	Adaptor Power source	8
1.3	Mar 17, 2021	SAI revision draft	-
1.4	May 28, 2021	Delete Unboxing related content	7
1.5	June 10, 2021	Modify table on Ceiling Mount page	13-14
1.6	June 11, 2021	Correct typos	-

1 Preface

1.1 About This Guide

This documentation contains detailed information on SOLUM Newton Gateway. Information includes specifications, drawings, installation guides, among other items.

1.2 Audience

This manual is intended for any user (store managers, associates, installers, etc.) properly authorized to operate and install company equipment.

1.3 Abbreviations and Acronyms

Terminology/Abbreviation	Description
ESL	Electronic Shelf Label
GW	Gateway
RF	Radio Frequency
IT	Information Technology
PoE	Power over Ethernet
SMPS	Switch-Mode Power Supply
TBD	To Be Decided

2 Overview

The SOLUM Newton Gateway is a crucial centerpiece in the overall ESL System that electronically displays price and other product information, which are traditionally printed or written on paper in places like the supermarket.

In the ESL System, the Gateway receives product or price updates from the server and uploads the new data onto the corresponding electronic shelf label tags (or ESL Tags), changing the displayed product or price information.

An example of a typical Gateway and ESL tag setup can be seen in **Figure 2.1**.

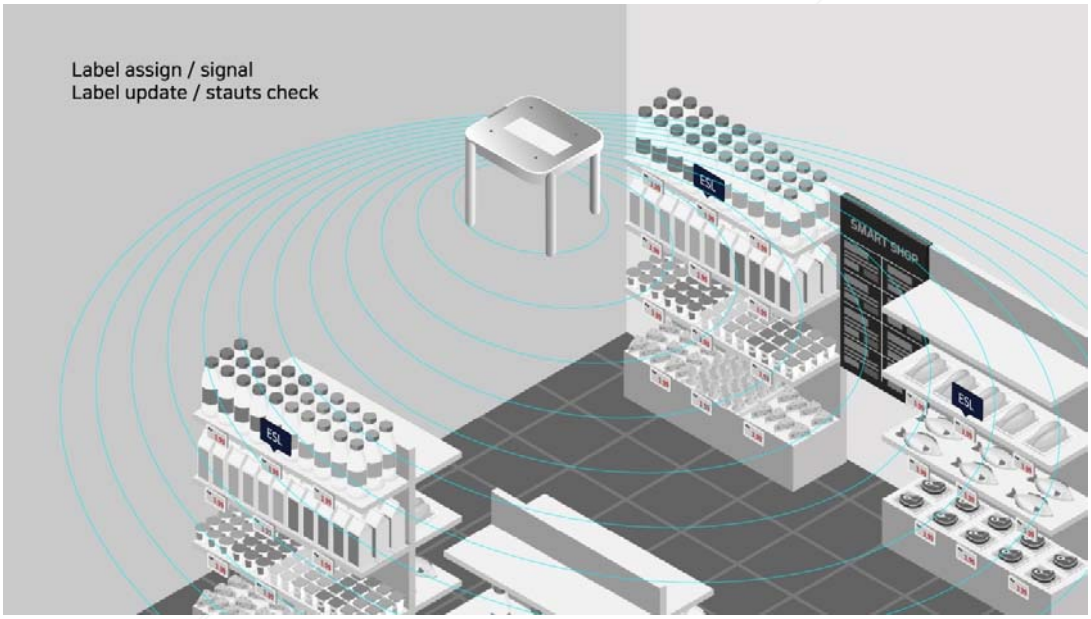

Figure 2.1. ESL System

3 Specifications

3.1 General Specifications

GENERAL SPECIFICATIONS	
Communication	Ethernet (10/100/1000Mbps) Wireless (2.4GHz ISM Band)
Dimension (Width x Height x Depth)	9.566 x 9.566 x 1.811 (in) 243 x 243 x 46 (mm)
Weight	Product Only: 1.433lbs // 650g With Packaging: 2.513lbs // 1,140g
Enclosure	ABS Plastic
Operating Temperature	32°F ~ 104°F // 0°C ~ 40°C
Storage Temperature	-13°F ~ +140°F // -25°C ~ +60°C

3.2 Radio Frequency Specifications

RF SPECIFICATIONS	
Frequency Band (Tx, Rx)	2401 ~ 2480 MHz
Antenna Types	External & Internal
Antenna Gain	4.9 dBi (for external antennas)
Coverage	Radius 25m Depending on RF Environment such as RF interference.

3.3 Power Specifications

POWER SPECIFICATIONS	
Input Power	Power over Ethernet (PoE), IEEE802.3af Input Voltage Range: 36~57VDC Nominal Input Voltage: 48VDC
	DC Input (AUX) Input Voltage Range: 5~12VDC Input Power: 10W

CAUTION	Use ***either*** DC Power Supply ***or*** PoE (Power over Ethernet). Both power inputs should not be used at the same time.

3.3.1 DC Adaptor Power source

Electrical Characteristics

Input Voltage	Load	Power
5~12 VDC	2A	10W

Drawing

4 Description

4.1 Gateway Exterior

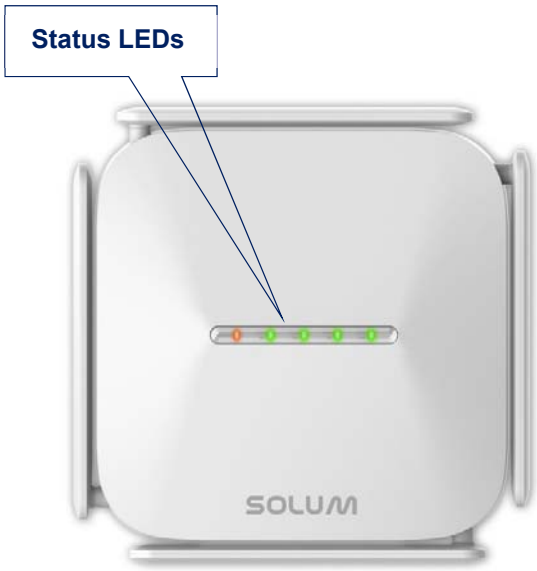

Figure 4.1. Top

Figure 4.2. Bottom

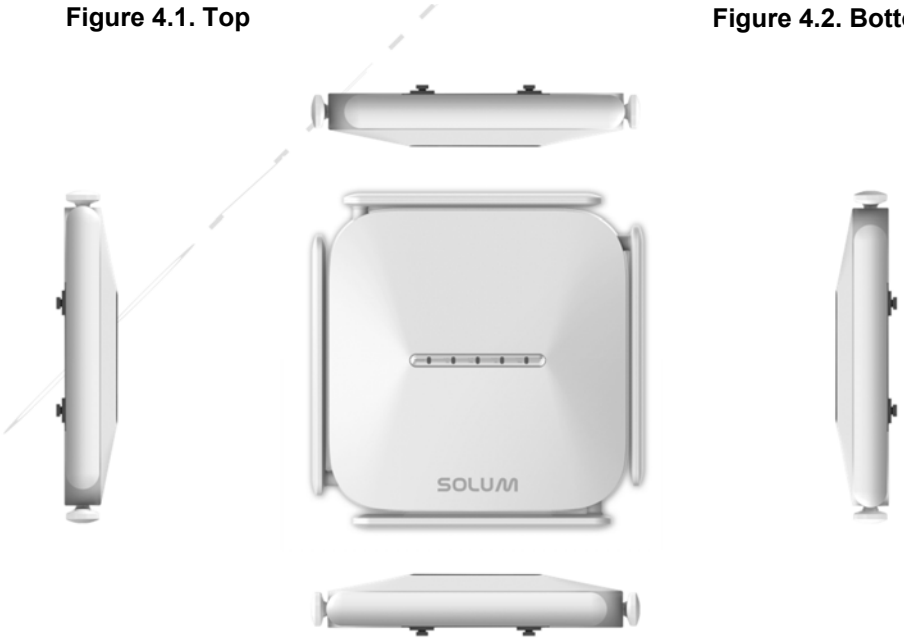

Figure 4.3. Top and Sides

4.2 LED Status

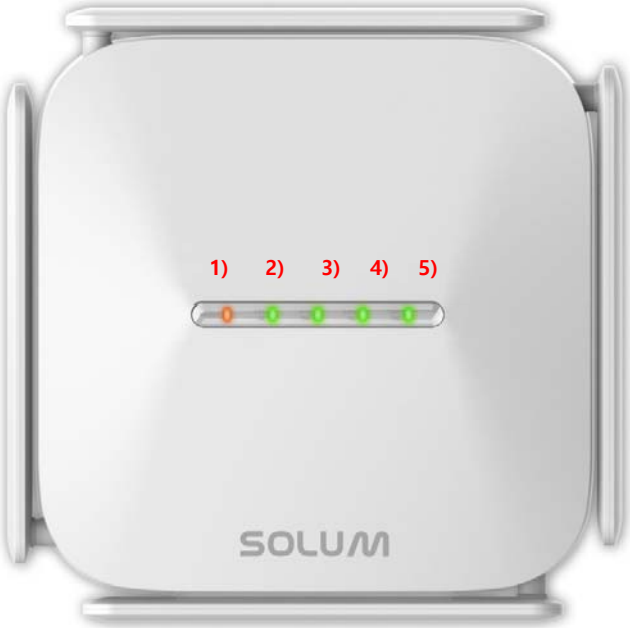

1) Network LED
2) 2.4G SIL LED
3) 2.4G TML LED
4) Not used
5) Not used

Figure 4.4. Gateway LEDs

After the Gateway is powered on by plugging in ***either*** an Ethernet Cable with PoE ***or*** a SMPS Power Adapter (with an Ethernet Cable), LED status lights will turn on or blink depending on the current state.

1	**Network**	• ON if Ethernet link is connected • GW checks every 1 sec. whether Ethernet link is connected.
2	**2.4GHz SIL**	• Blinks (1 sec. duration) if the Server interface layer is operational. • GW checks the operation of the Server interface layer
3	**2.4GHz TML**	• Blinks (3 sec. duration) if the RF MODEM is operational. • GW checks the operation of the RF MODEM interface layer
4	Not used	
5	Not used	

5 Installation

5.1 Bracket Installation

Components: includes installation accessories – plate, bracket, screws

1) Drill 4 holes(Φ0.14” (3.5mm)) on the wall or ceiling to align with the **Plate (a)**.
2) Drill a Φ1” (25mm) hole or bigger in the wall or ceiling for the Ethernet Cable. If needed, drill a second Φ1” (25mm) hole or bigger for the SMPS Power Adapter.
3) Align the **mounting bracket holes (d)** to the holes drilled through the wall or ceiling from **Step 1.**
4) Route the Ethernet Cable (and the SMPS Power Adapter, if needed) through the two Φ10 holes made from **Step 2**.
5) Use **Screws (c)** to completely secure the mounting bracket to the wall or ceiling.
6) Slide the **Gateway (e)** into the mounting bracket.

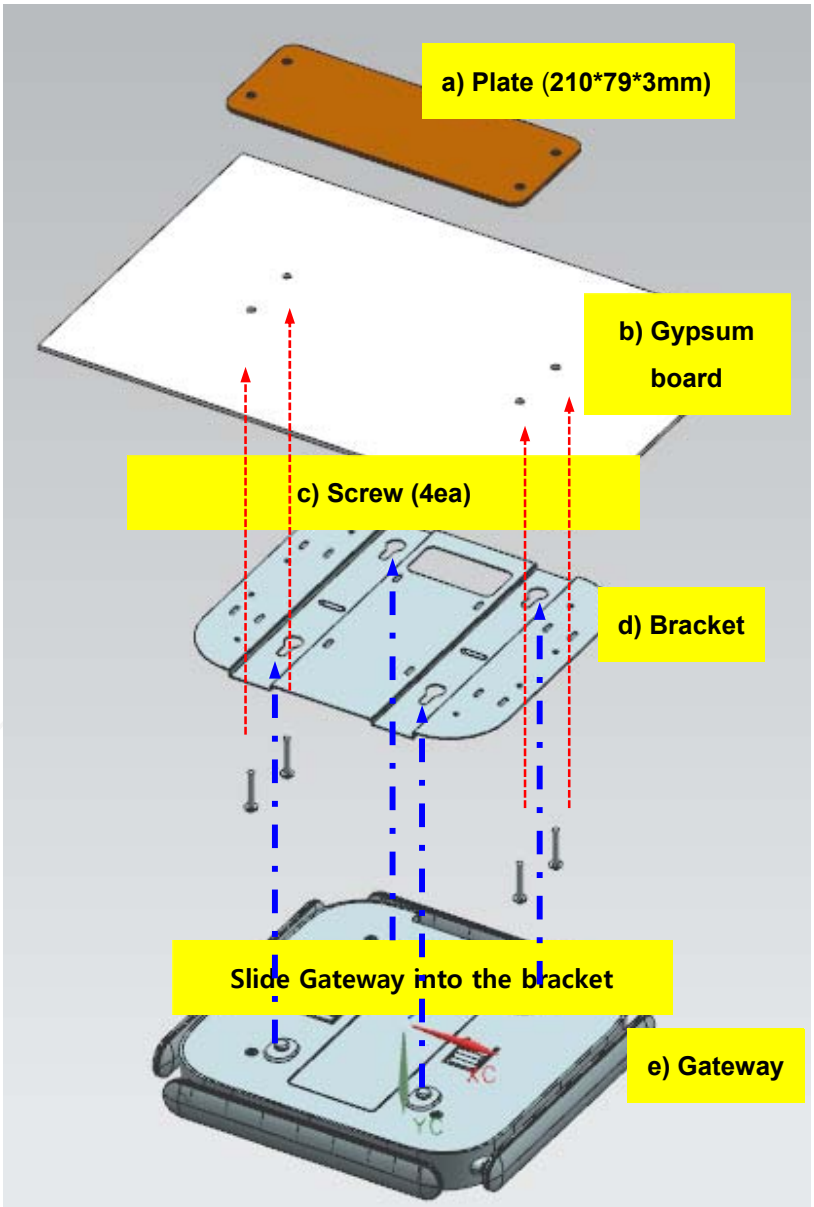

Figure 5.1. Gateway Installation

5.2 Ceiling Mount

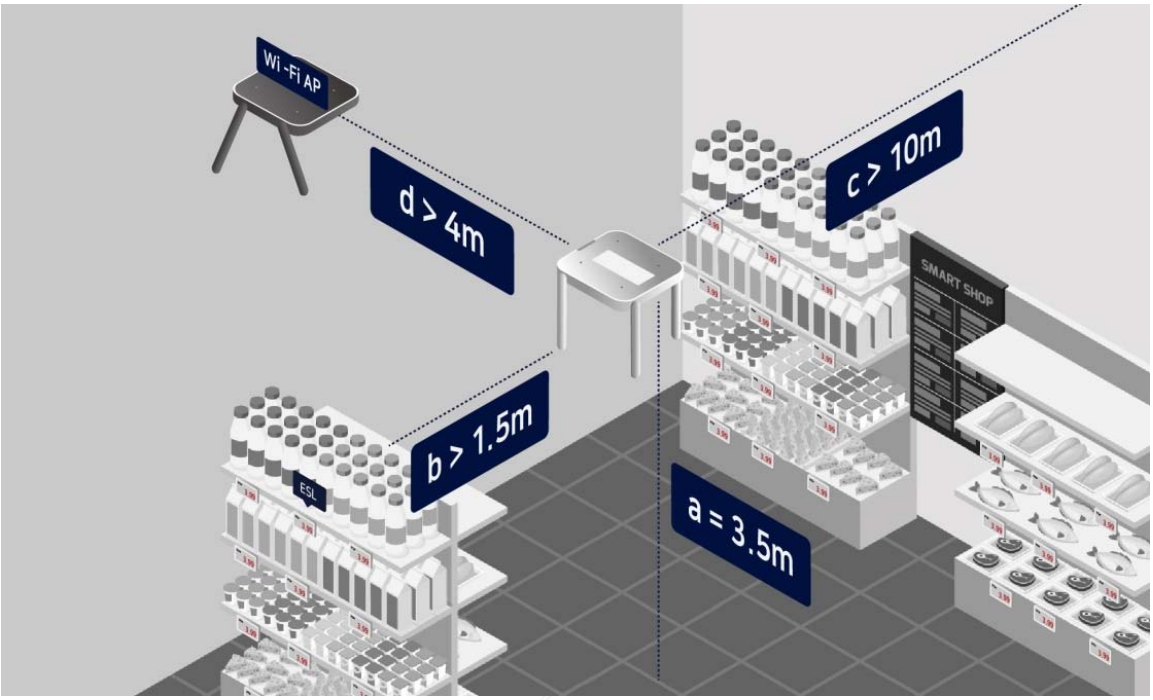

	Distance	Recommended Distance	Remarks
(a)	from floor	11.5ft (3.5m)	
(b)	from top of shelf/gondola	> 5ft (1.5m)	max height from floor
(c)	from wall	> 33ft (10m)	
(d)	from WIFI AP	> 13ft (4m)	

Image displays optimal antenna positioning.

WARNING : This equipment may generate or use radio frequency energy. Changes or modifications to this equipment may cause harmful interference unless the modifications are expressly approved in the instruction manual. The user could lose the authority to operate this equipment if an unauthorized change or modification is made.

This device complies with part 15 of the FCC Rules. Operation is subject to the following two conditions: (1) This device may not cause harmful interference, and (2) this device must accept any interference received, Including interference that may cause undesired operation.

NOTE : This equipment has been tested and found to comply with the limits for a Class B digital device, pursuant to part 15 of the FCC Rules. These limits are designed to provide reasonable protection against harmful interference in a residential installation This equipment generates, uses and can radiate radio frequency energy and, if not installed and used in accordance with the instructions, may cause harmful interference to radio communications, However, there is no guarantee that interference will not occur in a particular installation. If this equipment does cause harmful interference to radio or television reception, which can be determined by turning the equipment off and on, the user is encouraged to try to correct the interference by one or more of the following measures:

- Reorient or relocate the receiving antenna.
- Increase the separation between the equipment and receiver.
- Connect the equipment into an outlet on a circuit different from that to which the receiver is connected.
- Consult the dealer or an experienced radio/TV technician for help.

Caution

This device complies with FCC radiation exposure limits for an uncontrolled

environment. Avoid operating this device at a distance less than 20cm from the user

6 Precautions

This RF device operates on the 2.4GHz frequency band and can produce radio interference. The device, therefore, may not be used for applications where safety of human lives is concerned.

6.1 Usage Environment

Take extra caution when using this RF device in the vicinity of other electronic devices and appliances. Most electronic devices and appliances use electromagnetic waves. Electromagnetic waves emitted by this RF device can affect other electronic devices and appliances.

If using the device in an explosion hazard area, follow all safety regulations, instructions, and signals.

6.2 Storage and Use

- Moisture and liquids can damage internal parts if allowed to enter the device.
- Do not place or store the product on a sloped surface. The product may slide and fall off the surface and damage.
- Parts and circuits may damage if used or stored in extreme temperatures.
- Avoid areas with strong magnetism or subject to magnetism.
- Contact between the device and a magnetic object can lead to malfunctions.
- Do not place the product near heat-producing kitchen appliances like a stove or a microwave or in the vicinity of highly pressurized containers.
- External impact to the product, such as from being dropped, can damage the product.
- Twisting and bending the product can damage the exterior casing and the internal components.