HEXAGON MINING

MINING OPERATIONS

HxGN MineDiscover Core

User Reference Manual

Version No.2.0
Issued August 2018
English

HxGN MineDiscover Core User Reference Manual

This document and any information or descriptive matter contained therein is communicated in confidence and is the copyright property of Leica Geosystems. Neither the whole, nor any extract may be disclosed, loaned, copied, or used in manufacturing or tendering purposes without their written consent.

© Copyright [2018] Leica Geosystems Pty Ltd. All rights reserved. Leica Geosystems Pty Ltd is part of **Hexagon**. Leica Geosystems and the Leica Geosystems logo are the registered trademarks of Leica Geosystems. All trademarks or service marks used herein are property of their respective owners. Leica Geosystems makes no representation or warranty regarding the accuracy of the information in this publication. This document gives only a general description of the product(s) or service(s) offered by Leica Geosystems and, except where expressly provided otherwise, shall not form part of any contract. Such information, the products and conditions of supply is subject to change without notice.

Disclaimer: Illustrations, descriptions, and technical specifications in this document are not binding and are subject to change without notice.

This document is optimized for printing on A4 paper.

Revision History

Date	Document Version	Software Version	Author	Revision
25 Oct 2017	0		Gustavo Severino	Manual Initial Version
15 May 2018	1		Graham Tooms	Manual Initial Version
5 Sep 2018	2.0		Graham Tooms Mary Ann Martin	Revised FCC labels, corrected MPE 4G calculations. Changed 4G antenna separation.
21 Oct 2018	3.0		Graham Tooms	Added 9.2.4 Simultaneous Transmission MPE calculations

Table Of Contents

1 Document Introduction 1
1.1 Contacting Support 1
1.2 Document Conventions 1
2 Overview 2
2.1 System Information 2
2.1.1 HxGN MineDiscover Core LP (Low Precision)—CoreLP-WW, CoreLP-WWG) 2
2.1.1.1 CoreLP Features 3
2.1.1.2 CoreLP-WWG-only Features 3
2.1.1.3 CoreLP System Diagram 3
2.1.2 HxGN MineDiscover Core HP (High Precision)—CoreHP-WW, CoreHP-WWU, CoreHP-WWG 4
2.1.2.1 CoreHP Features 4
2.1.2.2 CoreHP-WWG-only Features 4
2.1.2.3 CoreHP-WWU only Features 4
2.1.2.4 CoreHP System Diagram 6
2.2 Connector Description 7
2.2.1 Connector Identification 7
2.2.1.1 Connector Interface Description 7
2.3 LEDs 8
2.3.1 LED Location 8
2.3.2 LED Identification 8
2.3.3 LED Status and Error Codes 9
2.4 Labels 10
2.4.1 Label Locations 10
2.4.1.1 Serial Number Label 10
2.4.1.2 Compliance Labels 11
2.4.2 FCC Certification Labels 12
2.4.3 Serial Number Label Examples 12
3 Hardware Installation 15
3.1 Before Installation 15
3.2 Core Module Installation 15
3.2.1 Power Cable Installation 15
3.3 Antenna Installation 16
3.3.1 Antenna Application 16
3.3.2 GNSS Antenna Installation 16
3.3.3 Wi-Fi Antenna Installation 17
3.3.4 External RTK Correction Antenna (CoreHP-WWU only) 17
3.3.5 Cellular Antenna Installation (CoreLP-WWG and CoreHP-WWG only) 17
3.4 Connection to Additional Sensors 18
3.5 Upgrade Software using USB Flash Drive 18
3.6 SIM Card Installation (CoreLP–WWG and CoreHP-WWG only) 18
4 Care and Transport 20
4.1 Transport 20
4.2 Storage 20
4.3 Cleaning and Drying 20
4.3.1.1 Product and Accessories 20
4.3.1.2 Connectors and Plugs 20
5 Safety Directions 21
5.1 General Introduction 21

 © Leica Geosystems

5.2 Intended Use 21
5.2.1 Permitted Uses 21
5.2.2 Adverse Use 21
5.3 Limits of Use 21
5.3.1 Environment 21
5.4 Responsibilities 21
5.4.1 Manufacturer of the Product 21
5.4.2 Manufacturers of Non-Leica Geosystems Mining Accessories 22
5.4.3 Persons in Charge of the Product 22
5.5 Hazards of Use 22
5.5.1 General Hazards 22
5.5.2 Mechanical Hazards 22
5.5.3 Lightning Hazards 23
5.5.3.1 Lightning Conductors 23
5.5.4 Disposal 23
5.6 Electromagnetic Compatibility (EMC) 24
6 Technical Data 25
6.1 Design 25
6.1.1 User Interface 25
6.1.2 Dimensions 25
6.1.3 Weight 25
6.1.4 Power Supply 25
6.2 Interfaces 25
6.3 Environmental Specifications 26
6.3.1 Temperature 26
6.3.2 Protection Against Water, Dust, and Sand 26
6.3.3 Humidity 26
6.3.4 Shock and Vibration 26
6.4 FCC Statement (Applicable for U.S.) 27
7 Appendix A – Connector Pinout 28
8 Appendix B – Universal Antenna Bracket 29
9 Appendix C: HxGN MineDiscover Core FCC Maximum Permissible Exposure Calculations 30
9.1 CoreHP and CoreLP Intentional Radiators 30
9.1.1 Wi-Fi 30
9.1.2 GSM (LTE, 4G) 30
9.2 MPE Calculations 30
9.2.1 MPE Formula 30
9.2.2 Wi-Fi MPE Calculations 30
9.2.3 GSM (LTE, 4G) MPE Calculations 31
9.2.3.1 GSM 300 to 1500 MHz 31
9.2.3.2 GSM 1.5 GHz to 2.7 GHz 31
9.2.4 Simultaneous Transmission (WLAN and GSM) MPE Calculations 31
10 Glossary 32

1 Document Introduction

The HxGN MineDiscover Core User Reference Manual is part of Hexagon Mining's Documentation Suite.

This manual is intended to serve as a guide to the HxGN MineDiscover Core modules. This manual provides all instructions required to operate the Core product to a basic level. This manual provides an overview of the system together with the care and transport, technical data, and safety directions.

It is assumed a person using this manual is familiar with:

- Site-specific safety procedures, Safe Work Procedures (SWPs) and Standard Operating Procedures (SOPs).
- Electrical installation processes and procedures.
- Hardware installation processes.
- Hexagon Mining equipment installation.

Note

The document uses generic images to show general layout and generic information for various procedures. The site-specific screen layout, menu, and procedure information may vary from what is displayed in the manual.

1.1 Contacting Support

For all Hexagon Mining product support:

Contact Method	Details
Web portal	https://hexagonmining.com/customer/portallogin

1.2 Document Conventions

This document uses basic conventions to indicate actions:

Convention Example	Description
Select **FILE** > **PRINT**	Menu selections, buttons, and icons appear in bold text. In this case, select the **FILE** menu and the **PRINT** option. Location and capitalization of menu items may vary by mine site.
Ctrl+P	Keyboard shortcut keys. The example indicates to select and hold down the Ctrl key and select the P key.
See xxx Refer to	"See" indicates a reference to another section of this document. "Refer to" indicates reference to another document.
WARNING	Warnings alert the user to dangerous procedures which could cause injury or death.
CAUTION	Cautions alert the user to dangerous procedures which could cause damage to equipment.
Note	Notes supply important information about a procedure which is not covered in the procedure text.

2 Overview

The HxGN MineDiscover Core HP and LP rugged industrial computers serve as on machine telemetry modules. They monitor real time position through GNSS, interface with on machine systems to collect vital production and machine health data, and communicate back to a central server through Wi-Fi or cellular networks.

> **Note**
> The images used in this manual are for reference purposes only; individual screens and icons may differ from the actual items.
> This product is intended for Professional Use only.

HxGN MineDiscover Core is a rugged, industrial solution. The family includes:

Version	Description
HxGN MineDiscover Core LP-WW	Monitors a single GNSS receiver. Features include GPIO, 2 Wi-Fi, 2 Ethernet, 3 CAN, and 3 serial ports.
HxGN MineDiscover Core HP-WWG	Identical to the CoreLP-WW, with added Cellular (GSM (4G)) modem.
HxGN MineDiscover Core HP-WW	Monitors dual GNSS receivers. Features includes GPIO, 3 Wi-Fi, 2 Ethernet, 3 CAN, and 3 serial ports
HxGN MineDiscover Core HP-WWG	Identical to the CoreHP-WW, with added Cellular (GSM (4G)) modem.
HxGN MineDiscover Core HP-WWU	Identical to the CoreHP-WW, with added internal 450M Hz UHF RTK radio.

2.1 System Information

2.1.1 HxGN MineDiscover Core LP (Low Precision)—CoreLP-WW, CoreLP-WWG)

The CoreLP module monitors a single internal GNSS receiver and external I/O, reporting the details to a server over the WI-FI network.

The CoreLP unit is identified by its pale grey base.

 © Leica Geosystems

2.1.1.1 CoreLP Features

All CoreLP modules share these features:

- One GNSS module (L1 GPS/GLONASS). (1 x TNC connector)
- Primary Wi-Fi module (2.4 GHz a/b/g/n 500mW), for machine diversity (2 x TNC connectors)
- Secondary Wi-Fi module (2.4 GHz a/b/g/n 500mW) machine access point (1 x TNC connector)
- Two 10/100 Ethernet Ports (2 x M12, D code, F, 4 pin, connectors)
- Two RS232 Serial Ports (1 x M12, A code, M, 8 pin, connector)
- One RS232/RS422/RS485 serial port, 3 GPI, 1 GPO (1 x M12, A code, F, 12 pin connector)
- Two CAN ports, with CAN power (2 x M12, A code, F, 5 pin, connectors)
- Power input (9-36V DC, 1A) + One CAN port, unpowered (M12, A code, M, 5 pin, connector)
- One USB 2.0, 480 Mbit port, (M8 connector)
- One internal 3-axis accelerometer.
- Industrial metal housing (IP67).

2.1.1.2 CoreLP-WWG-only Features

- One Cellular Modem (4G LTE, 3G HPSA), (TNC connector)
- SIM card holder accessible behind IP67 sealed back cover.

CAUTION
The 4G SIM card must be a data SIM, and data must be activated on the carrier's network. Voice-only networks will not carry the data.

Note
Data charges may apply. Due to the activity on the networks, unlimited data contracts are suggested to avoid extra data charges.

2.1.1.3 CoreLP System Diagram

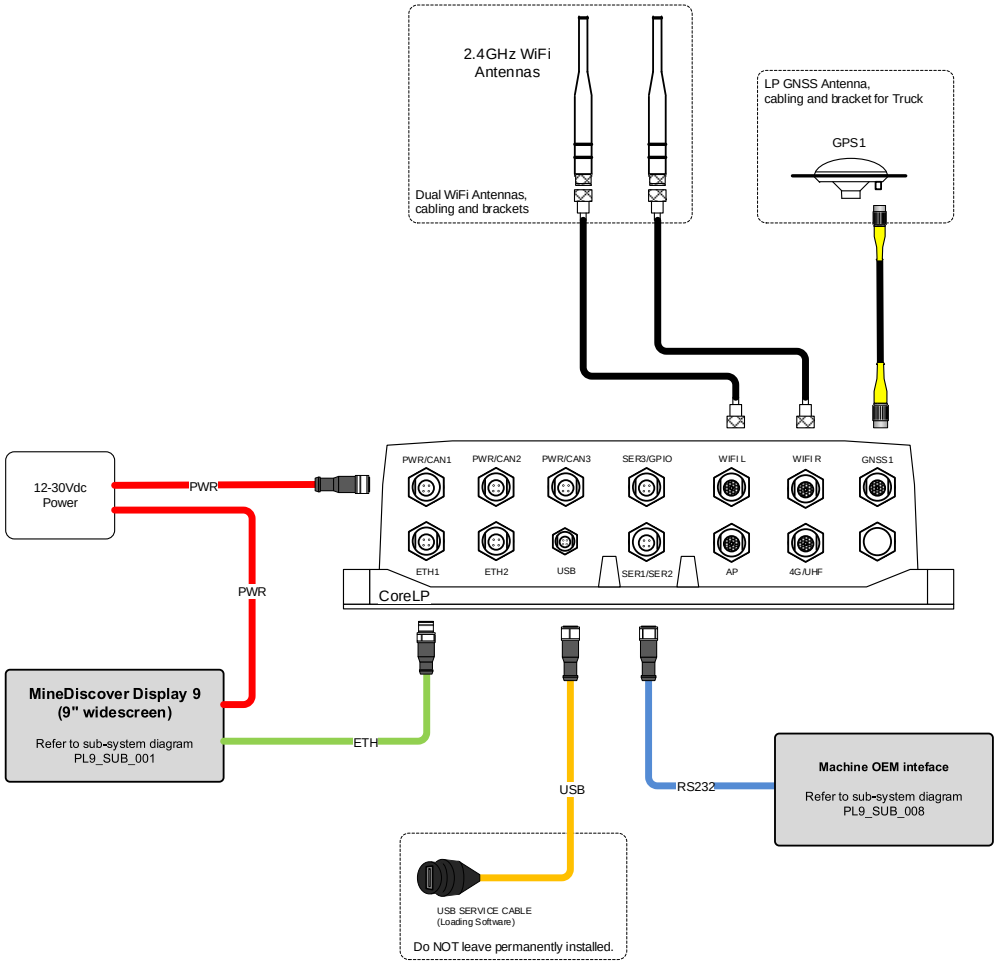

2.1.2 HxGN MineDiscover Core HP (High Precision)—CoreHP-WW, CoreHP-WWU, CoreHP-WWG

The CoreHP monitors dual Real Time Kinematic (RTK) GNSS receivers and external I/O, reporting the details to a server through the WI-FI network providing high precision location data.

The CoreHP unit is identified by its red base.

2.1.2.1 CoreHP Features

All CoreHP modules share these features:

- Dual RTK Receivers, GPS L1, L2, L2C, L5; GLONASS L1, L2; 2BeiDou: B1, B2; Galileo: E1, E5a, E5b, AltBOC
- Primary Wi-Fi module (2.4 GHz a/b/g/n 500mW), for machine diversity (2 x TNC connectors)
- Secondary Wi-Fi module (2.4 GHz a/b/g/n 500mW) machine access point (1 x TNC connector)
- Two 10/100 Ethernet Ports (2 x M12, D code, F, 4 pin, connectors)
- Two RS232 Serial Ports (1 x M12, A code, M, 8 pin, connector)
- One RS232/RS422/RS485 serial port, 3 GPI, 1 GPO (1 x M12, A code, F, 12 pin connector)
- Two CAN ports, with CAN power (2 x M12, A code, F, 5 pin, connectors)
- Power input (9-36V DC, 1A) + One CAN port, unpowered (M12, A code, M, 5 pin, connector)
- One USB 2.0, 480 Mbit port, (M8 connector)
- One internal 3-axis accelerometer.
- Industrial metal housing (IP67).

2.1.2.2 CoreHP-WWG-only Features

- One Cellular Modem (4G LTE, 3G HPSA), (TNC connector)
- SIM card holder accessible behind IP67 sealed back cover.

CAUTION
The 4G SIM card used must be a data SIM, and data must be activated on the carrier's network. Voice-only networks will not carry the data.

Note
Data charges may apply. Due to the activity on the networks, unlimited data contracts are suggested to avoid extra data charges.

2.1.2.3 CoreHP-WWU only Features

- One 450MHz UHF, RTK Radio (TNC connector)

Note
The radio is compatible with most RTK radio protocols.

 © Leica Geosystems

2.1.2.4 CoreHP System Diagram

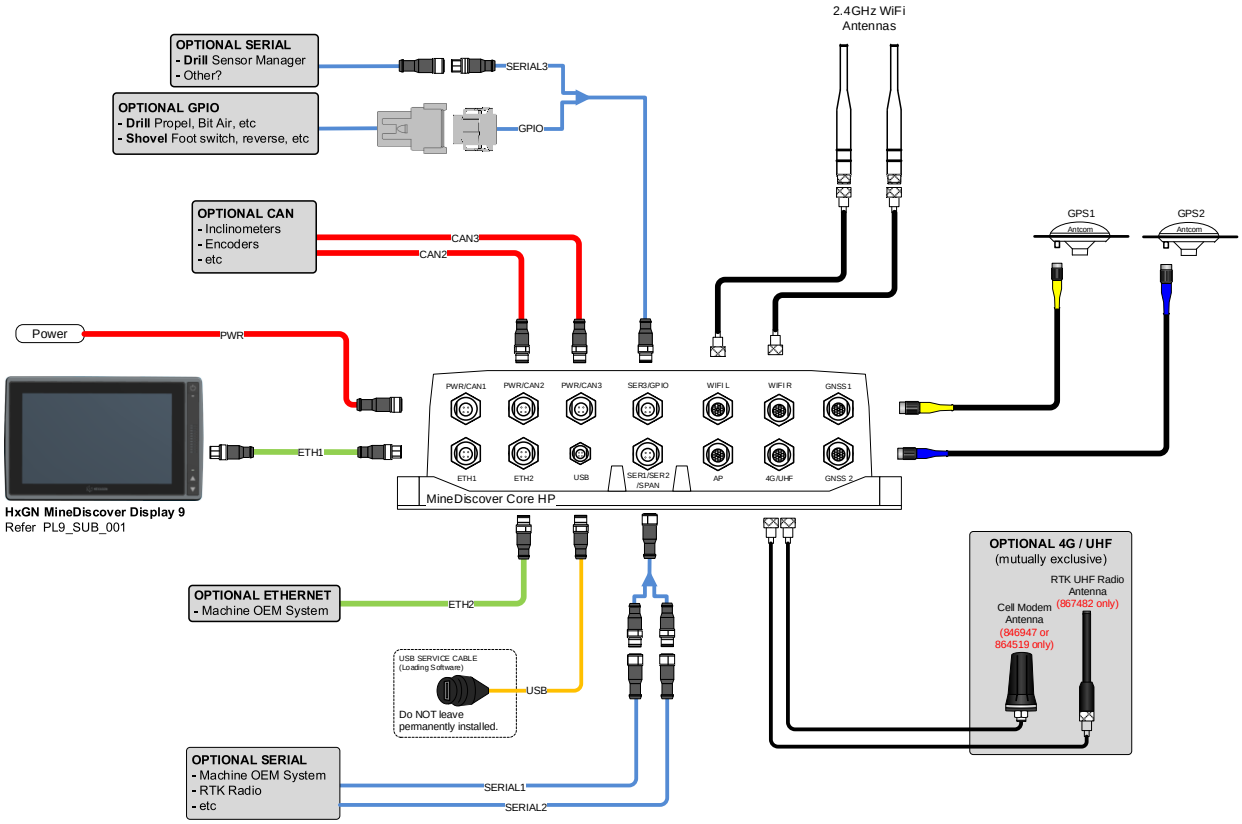

 © Leica Geosystems

2.2 Connector Description

2.2.1 Connector Identification

The HP and LP variants of the product have different faceplates due to functionality available. Each module has connector function marked on the faceplate.

CoreLP

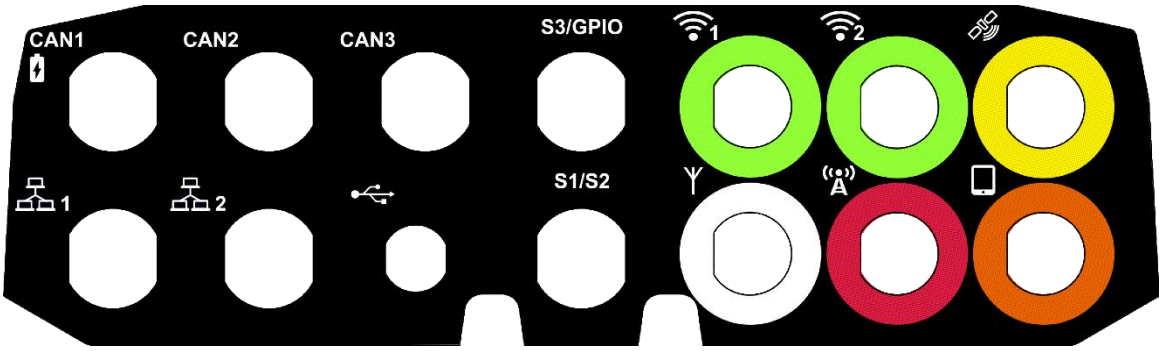

CoreHP

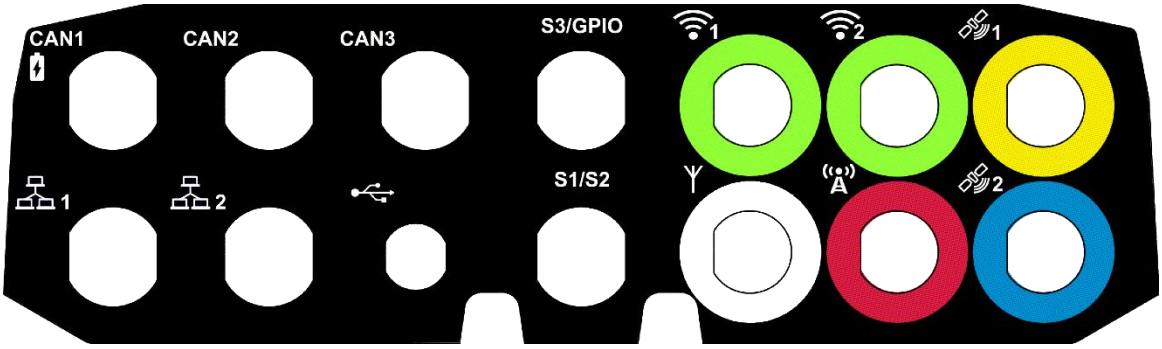

2.2.1.1 Connector Interface Description

The interfaces are:

Symbol (Connector)	Interface	CoreLP-WW	CoreLP-WWG	CoreHP-WW	CoreHP-WWU	CoreHP-WWG
1 (TNC yellow)	GNSS1	Yes	Yes	Yes	Yes	Yes
2 (TNC blue)	GNSS2	No	No	Yes	Yes	Yes
1 2 (TNC green)	Wi-Fi1, Wi-Fi2	Yes	Yes	Yes	Yes	Yes
(TNC white)	Wi-Fi AP	Yes	Yes	Yes	Yes	Yes
(TNC red)	GSM (4G)	No	Yes	No	No	Yes
	UHF RTK Radio	No	No	No	Yes	No
1 2 (M12, F, 4 pin)	ETH1, ETH2	Yes	Yes	Yes	Yes	Yes

CAN1 (M12, M, 5 pin)	CAN1/Power In	Yes	Yes	Yes	Yes	Yes
CAN2 CAN3 (M12, F, 5 pin)	CAN2, CAN3	Yes	Yes	Yes	Yes	Yes
S1/S2 (M12, M, 8 pin)	Seria1, Serial2 (RS232)	Yes	Yes	Yes	Yes	Yes
S3/GPIO (M12, F, 12 pin)	Serial3 (RS232/422/485), GPIO	Yes	Yes	Yes	Yes	Yes
(M8, F)	USB	Yes	Yes	Yes	Yes	Yes
(TNC orange)	Bluetooth	No	No	No	No	No

2.3 LEDs

This section describes the status LEDs common to all Core modules. LED's indicate the status of the module for different working and error conditions

2.3.1 LED Location

The LED's are located on the top of the module.

2.3.2 LED Identification

There are three external LEDs on the Core module. See 2.3.3 LED Status and Error Codes on page 9 for more information on the displayed light patterns.

LED	Icon	Function
Network LED		Indicates network status. Lights GREEN when a wireless network connection is established.
GNSS (GPS) LED		Indicates GNSS status. Lights BLUE when the Core unit has GNSS signals.
Power LED		The Power LED indicates the power and status of the unit during boot up. Lights RED, GREEN, or ORANGE, dependent on the Core unit power and bootup status.

 © Leica Geosystems

2.3.3 LED Status and Error Codes

The Power LED indicates the power and status of the unit during boot up. The GPS and Radio LEDs are used exclusively to indicate the GPS and Radio Network status respectively. Details of the LED status codes are shown below: -

State	Power	GNSS	Network	Notes
Power off				If no LEDs come on, check the power.
System begins booting	BLINK			
System finishes booting	SOLID			At this point, the application starts running.
Power on	SOLID			If the Power LED remains solid red for more than a few seconds, the system has most likely failed to boot.
System fails to boot	SOLID			End User: Contact Hexagon Mining for technical assistance. Hexagon Mining authorized installer: Insert the provided bootstrap USB stick and USB keyboard and power cycle the system to recover (key sequence to force boot from bootstrap USB stick).
Serious error condition occurs (after booting)	BLINK			End User: Contact Hexagon Mining for technical assistance. Hexagon Mining authorized installer: Insert a recovery USB stick and power cycle the system to recover.
Amber only occurs if updating firmware from a Hexagon provided USB stick. System begins booting from the bootstrap image	BLINK			
Amber only occurs if updating firmware from a Hexagon provided USB stick. System finishes booting	SOLID			End User: Contact Hexagon Mining for technical assistance. At this point, the bootstrap system begins an install (with more LED changes). If the module remains in this state, the bootstrap USB stick has not been properly prepared, contact Hexagon Mining Support.

State	Power	GNSS	Network	Notes
from the bootstrap image				
GPS running (not fixed)		BLINK		
GPS fixed		SOLID		
Network connecting			BLINK	
Network connected			SOLID	

2.4 Labels

2.4.1 Label Locations

2.4.1.1 Serial Number Label

The Serial Number Label is located on the rear of the module and on the base.

Rear Serial Number Label Location

- The serial number label on the rear of the module lists: Description, Power Requirement, Serial Number, and Where Manufactured.
- The serial number label on the base of the module lists: Compliance, Description, Article Number, Power Requirement, Serial Number, and Where Manufactured.

 © Leica Geosystems

Base Serial Number Label Location

2.4.1.2 Compliance Labels

Compliance labels are located on all modules in the following locations:

FCC Certification Label and Serial Number Label Locations

2.4.2 FCC Certification Labels

FCC Certification Labels
CoreHP-WW, CoreLP-WW
FCC ID: 2AFYJ-CORE *Contains: FCC ID: 2AG87DLM168N* *This device complies with part 15 of the FCC Rules.* *Operation is subject to the following two conditions:* *(1)This Device may not cause harmful interference, and* *(2) this device must accept any interference received, including interference that may cause undesired operation.*
CoreHP-WWG, CoreLP-WWG
FCC ID: 2AFYJ-CORE *Contains: FCC ID: 2AG87DLM168N* *Contains: FCC ID: N7NEM75* *This device complies with part 15 of the FCC Rules.* *Operation is subject to the following two conditions:* *(1)This Device may not cause harmful interference, and* *(2) this device must accept any interference received, including interference that may cause undesired operation.*
CoreHP-WWU
FCC ID: 2AFYJ-CORE *Contains: FCC ID: 2AG87DLM168N* *Contains: FCC ID: MRBSATEL-TA23* *This device complies with part 15 of the FCC Rules.* *Operation is subject to the following two conditions:* *(1)This Device may not cause harmful interference, and* *(2) this device must accept any interference received, including interference that may cause undesired operation.*

2.4.3 Serial Number Label Examples

Rear of Module (Serial Number only)	Module Base (Article and Serial Number)
CoreLP-WW	

© Leica Geosystems

Rear of Module (Serial Number only)	Module Base (Article and Serial Number)
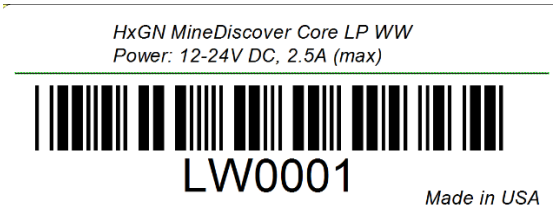	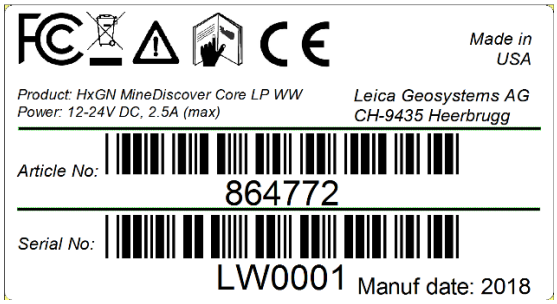
CoreLP-WWG	
	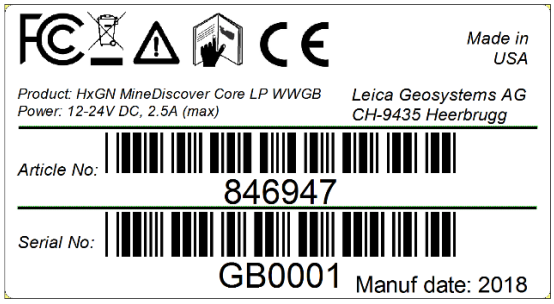
CoreHP-WW	
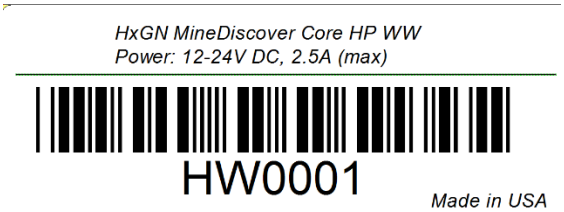	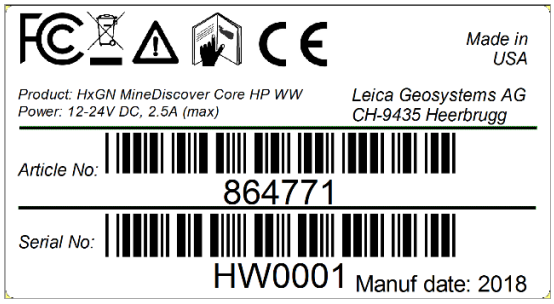
CoreHP-WWU	
	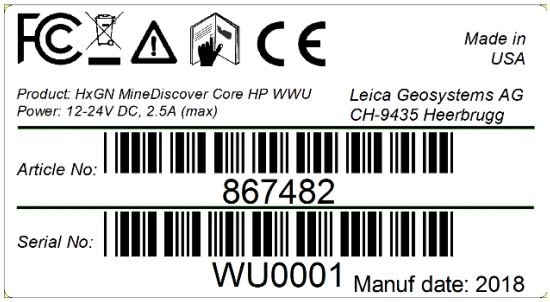
CoreHP-WWG	

Rear of Module (Serial Number only)	Module Base (Article and Serial Number)
	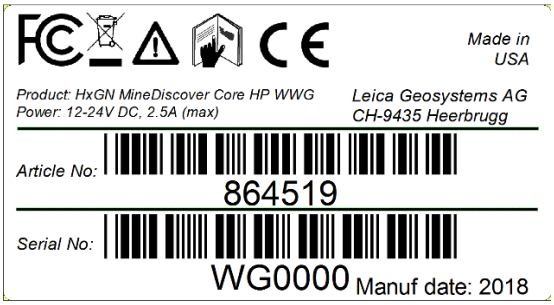

 © Leica Geosystems

3 Hardware Installation

3.1 Before Installation

Installation requires specialized knowledge and must be installed by a Hexagon Mining Authorized Installer. Hexagon Mining recommends that installation of the Core equipment be performed by a qualified technician.

The average installation time varies, the time of installation will be dependent on vehicle type and options purchased

For Core module safety and installation instructions refer to the HxGN Mine Discover Core Installation Manual.

> **WARNING**
> **All Hexagon Mining Equipment must be installed by qualified installation personnel.**
>
> **CAUTION:**
> **During any welding on the machine, the Core module must be completely isolated from the machine by disconnecting all its cables including power, I/O, and RF cables. Welding can cause large ground currents, which may damage internal electronic components of the Core module or its antenna. The Core module is not warranted for damage when connected during welding activities.**

- Install the system in a clean and dry workshop environment. Failure to do so may cause the system to short or promote product malfunction.
- Route and secure all cables and wiring to ensure that they do not rub, causing premature failure.

3.2 Core Module Installation

> **WARNINGS:**
> **Do not mount the Core where it may obscure the driver's view of the road or field.**
> **Do not mount the Core where it may be struck by a deploying airbag.**

For Core module safety and installation instructions refer to the HxGN Mine Discover Core Installation Manual.

3.2.1 Power Cable Installation

For Core module safety and installation instructions refer to the HxGN Mine Discover Core Installation Manual.

> **WARNING**
> **Always ensure the power supply cable is connected at the power supply source through a fuse rated no higher than 4A. Failure to do so may result in damage to the equipment and/or fire.**
>
> **CAUTION**
> **The Core unit is a 12-volt or 24-volt DC (negative-to-earth) system only. Connecting to a positive-to-earth system will cause damage, which is not covered by warranty.**

1. Connect the supplied power cable to a reliable power source, for example, the vehicle's main power system:
   a. Connect the red wire to a 12-volt or 24-volt positive, 4A fused power source, capable of delivering a constant 4 A.
   b. Connect the black wire to the vehicle's earth.
2. Route and secure all cables and wiring to meet Hexagon Mining requirements and ensure that there is no rubbing, which can cause premature failure.
3. Connect the power cable to the power connector on the front of the Core.

3.3 Antenna Installation

3.3.1 Antenna Application

To ensure correct antenna application, refer to the Antenna Application table.

WARNING

- Only antenna listed in the Antenna Application table are permitted to be used. If higher powered antennas are used, injury to personnel may occur.
- The Wi-Fi antennas must be mounted more than 30cm away from the operator.

CAUTION

- Only antenna cables provided with the Core module equipment for installation, and as identified in the specific Core module variant installation diagrams are to be used in Core module antenna installations to ensure optimal performance and meet regulatory requirements.

Antenna Application

Core Variant	Required Antenna: Hexagon Mining Part Number
Core LP and Core HP	GNSS: 813670 Wi-Fi: 809870
CoreHP-WWU only	UHF 450 MHz: 816636
CoreLP-WWG or CoreHP-WWG only	Cellular: 811872

3.3.2 GNSS Antenna Installation

CAUTION
Antennas must be mounted more than 20 cm away from any other antenna.

CAUTION
The Core GNSS Antenna must be mounted with a clear view of the sky and free from any obstruction from machine components.

Note
Read all instructions prior to assembly and installation.

The Core GNSS Antenna must be mounted with a clear view of the sky and free from any obstruction from machine components and must meet the following criteria.

1. The Core GNSS Antenna must be on the flat level part of the machine or mast.
2. Route the cables through the existing grommets if possible; if not, modification may be required to route the cables to the required location. If creating a new entry point, use a grommet to protect the cables.
3. The cables must not be cut, kinked, or bent tightly, as it degrades performance and a system failure may result.
4. Cables must be routed neatly back to the Core.

 © Leica Geosystems

3.3.3 Wi-Fi Antenna Installation

WARNING
Antennas must be mounted more than 30 cm away from the human body.

CAUTION
Wi-Fi antennas must be mounted more than 20 cm away from any other bandwidth or application's antenna.

Note
Wi-Fi connectivity is dependent on network infrastructure which is outside the scope of this Core manual.

Core module communication is transmitted using two Wi-Fi antennas.

1. Route the cables through the existing grommets if possible; if not, modification may be required to route the cables to the required location. If creating a new entry point, use a grommet to protect the cables.
2. The cables must not be cut, kinked, or bent tightly, as performance degrades, and a system failure may result.
3. Cables must be routed neatly back to the Core module.
4. Wi-Fi antennas must be positioned for maximum coverage (ideally at the highest points of the vehicle, if this is not possible, on either side of a vehicle) to maximize reception:
   - On large vehicles Wi-Fi antennas must be on either side of the vehicle to increase coverage and visibility to local access points
   - On small vehicles with the antennas mounted on top of the vehicle to resolve coverage issues, placement of the antennas 1/2 or 1 wavelength apart (approximately 12.5cm) can improve signal received strength and minimize the effect of multi-path interference.

3.3.4 External RTK Correction Antenna (CoreHP-WWU only)

For CoreHP, RTK corrections are required. These can be delivered over Wi-Fi or alternatively through an internal or external RTK radio.

- An external RTK radio can be connected using an external communications port; for example: serial or Ethernet.
- An RTK radio antenna must be mounted with good visibility to the RTK network infrastructure

3.3.5 Cellular Antenna Installation (CoreLP-WWG and CoreHP-WWG only)

WARNING
Antennas must be mounted more than 1 m away from the human body.

CAUTION
Antennas must be mounted more than 1 m away from any other antenna.

CAUTION
The SIM card used must be a data SIM, and data must be activated on the network. Voice-only networks will not carry the data.

Note
Cellular data connectivity is dependent on network infrastructure which is outside the scope of this manual.

For the Core WWG modules, communication is transmitted over cellular data networks. The cellular antenna and cabling is installed with the following hardware:

1. One Cellular antenna is used.
2. Route the cable through the existing grommets if possible; if not, modification may be needed to route the cables to the required location. If creating a new entry point, use a grommet to protect the cables.

3. The cable must not be cut, kinked, or bent tightly, because performance degrades, and a system failure may result
4. If cables are not terminated, terminate the cable and check connectivity before connecting to the antenna
5. Route the cable back to the module.
6. A universal antenna mounting bracket is supplied to secure the Cellular antenna.
7. Mount the N-type adapter through the 16mm hole in the universal bracket and secure the antenna with a lock nut.
8. Mount the 4G antenna to the N-type adapter.
9. Mount the universal antenna bracket onto the equipment in a location with at least 30cm of separation from other aerials and equipment structure.
10. Secure universal mounting bracket to the equipment with the provided bolts.
11. Connect the N-male connector to N-type adapter and route the cable to the module and connect the TNC connector to the 4G port.

3.4 Connection to Additional Sensors

For connection to all additional sensors and interfaces refer to machine specific installation manuals.

3.5 Upgrade Software using USB Flash Drive

A new version of software may be installed from a USB Flash Drive.

CAUTION:
Do not turn off the Core or remove the USB Flash Drive while the software upgrade is under way.

To upgrade the Core software using a USB Flash Drive:

1. Insert the compatible Core USB Flash Drive into the USB cable slot.
2. All three lights flash in unison, three times, at approximate 1s intervals, to indicate the USB Flash Drive is detected.
3. Only the Power LED remains illuminated green while software is being upgraded.
4. When the software upgrade is complete (usually <10s), all three LEDs flash rapidly (less 0.5s intervals), signaling the USB key must be removed.
5. Remove the USB.
6. The Core unit reboots, during which the Power LED will be solid red for no more than two to three seconds.
7. If the software and reboot is successful, the power LED changes to solid green.
8. The GNSS and Wi-Fi LEDs flash blue and green, when establishing fixed GPS position and Wi-Fi connectivity respectively and turn solid, once connectivity is established.
9. The Core module restarts automatically when the installation is complete.

3.6 SIM Card Installation (CoreLP–WWG and CoreHP-WWG only)

CAUTION
Installation or replacement of a SIM card must be done by trained Hexagon mining employees only.
The SIM card used must be a data SIM. Voice-only networks will not carry the data.
The SIM card must be activated on the network before installation into the CORE module.

 © Leica Geosystems

Note

Data charges may apply. Due to the activity on the networks, unlimited data contracts are suggested to avoid extra data charges.

To enable cellular support on systems equipped with a 2/3/4G internal modem a data SIM card from a suitable service provider is required

1. Place the unit on a workbench.
2. Unscrew the two screws and open the cover for the SIM card slot.

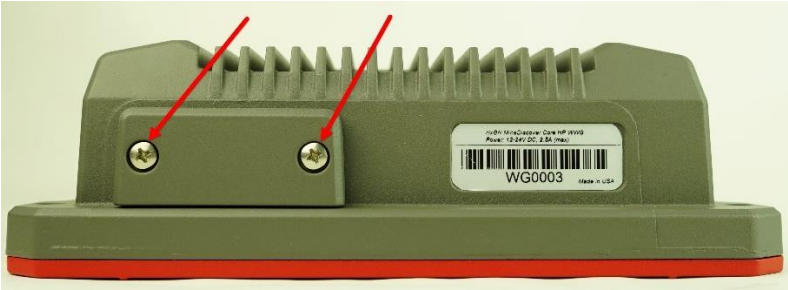

3. Use a pointed instrument to press the release mechanism.

4. Place data SIM card into SIM card holder with the chip facing up

Note

Ensure that the SIM card is securely seated in the holder.

5. Insert the SIM card holder back into the SIM card slot.
6. Replace the cover and replace screws to secure.
7. When the unit is turned on, ensure the Network LED appears.

4 Care and Transport

4.1 Transport

When transporting the product by rail, air, or sea, always use the complete original Hexagon Mining packaging, cardboard box, or an equivalent, to protect the product against shock and vibration.

4.2 Storage

Ensure the temperature limits are followed when storing the equipment, particularly in summer if the equipment is inside a vehicle. Please reference the Technical Data section for information about temperature limits.

4.3 Cleaning and Drying

4.3.1.1 Product and Accessories

Use only clean, soft, lint-free cloth for cleaning. If necessary, moisten the cloth with water or pure alcohol. Do not use other liquids; these may attack the polymer components.

4.3.1.2 Connectors and Plugs

Keep plugs clean and dry. Blow away any dirt lodged in the plugs of the connecting cables.

© Leica Geosystems

5 Safety Directions

5.1 General Introduction

- The following directions should enable the person responsible for the product, and the person who actually uses the equipment, to anticipate and avoid operational hazards.
- The person responsible for the product must ensure that all users understand these directions and adhere to them.

5.2 Intended Use

5.2.1 Permitted Uses

- Module is intended for Mining use only.
- Module is intended to be fitted to Mining assets only.
- Data communication with external appliances as part of a Hexagon Jigsaw Mining Solution.

5.2.2 Adverse Use

Adverse use can lead to injury, malfunction, and damage. It is the task of the person responsible for the equipment to inform the user about hazards and how to counteract them. The product is not to be operated until the user has been instructed on how to work with it.

> **WARNINGS:**
> **Unauthorized modification of Mining machinery by mounting or installing the product may alter the function and safety of that mining machinery.**
> **WARNING:**
> **Follow the instructions of the machinery manufacturer. If no appropriate instruction is available, ask the machinery manufacturer for instructions prior to mounting or installing the product.**

The following items result in adverse use.

- Use of the product without instruction.
- Use outside of the intended limits.
- Disabling safety systems.
- Removal of hazard notices.
- Opening the product using tools, for example a screwdriver, unless this is specifically permitted for certain functions.
- Modification or conversion of the product.
- Use after misappropriation.
- Use of products with obviously recognizable damages or defects.
- Use with accessories from other manufacturers without the prior explicit approval of Hexagon Mining.
- Inadequate safeguards at the working site, for example when using on the intended site.

5.3 Limits of Use

5.3.1 Environment

> **WARNING**
> **Not to be used on planes or any aircraft.**
>
> **WARNING**
> **Local safety authorities and safety experts must be contacted before working in hazardous areas, or in close proximity to electrical installations or similar situations by the person in charge of the product.**

This product is suitable for use in an atmosphere appropriate for permanent human habitation.

5.4 Responsibilities

5.4.1 Manufacturer of the Product

Hexagon Mining is responsible for supplying the product, including the User Manual and original accessories, in a completely safe condition.

5.4.2 Manufacturers of Non-Leica Geosystems Mining Accessories

The manufacturers of non-Hexagon Mining accessories for the product are responsible for developing, implementing, and communicating safety concepts for their products, and are also responsible for the effectiveness of those safety concepts in combination with the Hexagon Mining product.

5.4.3 Persons in Charge of the Product

WARNING:
The person responsible for the product must ensure that it is used in accordance with the instructions. This person is also accountable for the training and the deployment of personnel who use the product and for the safety of the equipment in use.

The person in charge of the product has the following duties:

- To understand the safety instructions on the product and the instruction in the User Manual.
- To be familiar with local regulations relating to safety and accident prevention.
- To inform Hexagon Mining immediately if the product and the application becomes unsafe.

5.5 Hazards of Use

5.5.1 General Hazards

- The absence of instruction, or the inadequate imparting of instruction, can lead to incorrect or adverse use, and can give rise to accidents with far-reaching human, material, financial, and environmental consequences.
- All users must follow the safety directions given by the manufacturer and the directions of the person responsible for the product.
- Only Hexagon Mining authorized service workshops are entitled to repair these products.
- Inadequate securing of the working site can lead to dangerous situations, for example in traffic, on building sites, and at industrial installations.
- Always ensure that the working site is adequately secured. Adhere to the regulations governing safety and accident prevention and road traffic.
- The operator assures that the machine is operated, guided and monitored by a qualified user (e.g., a licensed driver). The user has been able to take emergency measures, for example an emergency stop.
- While providing information to the operator of the machine, accidents may occur due to:
  - The operator not paying attention to the surroundings (people, ditches, traffic, etc.).
  - Malfunctions (of a system component interface, etc.).

5.5.2 Mechanical Hazards

- Incorrect fastening of the equipment to vehicles or transporters poses the risk of the equipment being broken by mechanical influence, vibration, or airstream. This may result in accident and injury.
- Periodically carry out test measurements and perform the field adjustments, particularly after the product has been subjected to abnormal use and before and after important measurements.
- When setting up the product, ensure that the accessories are correctly adapted, fitted, secured, and locked in position. Avoid subjecting the product to mechanical stress.
- Attach the external antennae professionally. The external antennae must be secured additionally, for example by use of a safety cord. Ensure that the mounting device is correctly attached and able to carry the weight of the external antenna (> 1kg) safely.
- Deflect the mechanically moving machine components as far as possible and define a safe installation zone.
- If the accessories used with the product are not properly secured and the product is subjected to mechanical shock, for example, by blows or falling objects, the product may be damaged, or people may sustain injury.

 © Leica Geosystems

5.5.3 Lightning Hazards

WARNING:
If the product is used with accessories, for example, masts, staffs, or poles, you may increase the risk of being struck by lightning. Danger from high voltages also exists near power lines. Lighting, voltage peaks, or the touching of power lines can cause damage, injury and death.

- Be sure to remain at a safe distance from electrical installations. Do not use the product directly under or in close proximity to power lines. If it is essential to work in such an environment, contact the safety authorities responsible for electrical installations and follow their instructions.
- To prevent damages due to indirect lightning strikes (voltage spikes) cables, for example for antenna, power source or modem must be protected with appropriate protection elements, like a lightning arrester. These instructions must be carried out by an authorized specialist.
- If there is a risk of a thunderstorm, or if the equipment is to remain unused and unattended for a long period, protect your product additionally by unplugging all systems components and disconnecting all connecting cable and supply cables.
- If the product must be permanently mounted in an exposed location, it is advisable to provide a lightning conductor for the product is given below. Always follow the regulations in force by your country regarding grounding antennas and mast. These installations must be carried out by an authorized specialist.

5.5.3.1 Lightning Conductors

Suggestions for design of a lightning conductor for a GNSS system follow:

5.5.3.1.1 On Non-Metallic Structures:

On Non-Metallic Structures, protection by air terminals is recommended.

1. An air terminal is a pointed solid or tubular rod of conducting material with mounting and connection to a conductor.
2. The position of four air terminals must be uniformly distributed around the antenna at a distance equal to the height of the air terminal. The air terminal diameter must be 12mm for copper or 15mm for aluminum. The height of the air terminals must be 25cm to 50cm.
3. All air terminals must be connected to the down conductors. The diameter of the air terminal must be kept to a minimum to reduce GNSS signal shading.

5.5.3.1.2 On Metallic Structures:

Protection is as described for non-metallic structures, but the air terminals can be connected directly to the conducting structure without the need for down conductors.

5.5.4 Disposal

If the product is improperly disposed of, the following can happen:

- If polymer parts are burnt, poisonous gases are produced, which may impair health.
- By disposing of the product irresponsibly, unauthorized persons may use it in contravention of the regulations, exposing themselves and third parties to the risk of severe injury and rendering the environment liable to contamination.

CAUTION

The product must not be disposed of with household waste. Dispose of the product appropriately in accordance with the national regulations in force in your country.
Always prevent access to the product by unauthorized personnel. Product Specific treatment and waste management information can be obtained from your Hexagon Mining dealer.

5.6 Electromagnetic Compatibility (EMC)

The term Electromagnetic Compatibility is taken to mean the capability of the product to function smoothly in an environment where electromagnetic radiation and electrostatic discharges are present, and without causing electromagnetic disturbances to other equipment.

- Electromagnetic radiation can cause disturbances in other equipment. Although the product meets the strict regulations and standards that are enforced in this respect, Leica Geosystems Mining cannot completely exclude the possibility that other equipment may be disturbed.
- There is risk that disturbances may be caused in other equipment if the product is used in conjunction with accessories from other manufacturers, for example field computers, personal computers, two-way radios, non-standard cables, or external batteries.
- Use only the equipment and accessories recommended by Leica Geosystems Mining. When combined with the product, they meet the strict requirements stipulated by the guidelines and standards. When using computers and two-way radios, pay attention to the information about electromagnetic compatibility provided by the manufacturer.
- Disturbances caused by electromagnetic radiation can result in erroneous measurements. Although the product meets the strict regulations and standards which are enforced in this respect, Leica Geosystems Mining cannot completely exclude the possibility that the product may be disturbed by very intense electromagnetic radiation produced by, for example, nearby transmitters, two-way radios, or diesel generators.
- Check the plausibility of results obtained under these conditions.
- If the product is operated with connecting cables attached at only one of their two ends, the permitted level of electromagnetic radiation may be exceeded, and the correct functioning of other products may be impaired.
- While the product is in use, connecting cables must be connected at both ends.

 © Leica Geosystems

6 Technical Data

6.1 Design

Aluminum enclosure with Trivalent Chromium and Powder Coat finish for protection against corrosion and sunlight (UV)

Polymer top decals for LED and connector identification.

6.1.1 User Interface

- Three LEDs.
- Ethernet Screen interface with Touch Screen (Liberty)

6.1.2 Dimensions

Length (cm)	Width (cm)	Height (cm)
16.3	22.6	6.9

6.1.3 Weight

Module	Weight (kg)
All CoreLP modules	2.075
All CoreHP modules	2.2

6.1.4 Power Supply

Power Consumption	External Supply Voltage
60W max	Normal Voltage 12 V and 24 V DC Voltage Range 9 V – 36 V Including +202 V surge protection (soon to be EN standard in Europe, up from EN13309, EN13766 Earth Moving Standard +123V)

6.2 Interfaces

Interface	Module	Description
WLAN	All modules	2 x 802.11 a/ac/b/g/n 2.4 GHz, 20,40, 80 MHz channels, up to 3 Gbps, 500 mW (27 dBm) radios (3 x TNC ports)
Ethernet	All modules	2 x 10/100 Base-T
CAN	All modules	2 x CAN Ports with 12 V @ 1 A CAN power; 1 x CAN Port w/o power
Serial	All modules	2 x RS232, 1 x RS232/RS422/RS485
USB	All modules	1 x USB 2.0, 480 MB/s
GNSS	CoreLP-WW and CoreLP-WWG only	Single GNSS Receiver. Up to three concurrent systems (GPS L1, GLONASS L1, Galileo E1, BeiDou B1)
GNSS	CoreHP-WW, CoreHP-WWG, and CoreHP-WWU only	Dual RTK Receivers, GPS L1, L2, L2C, L5; GLONASS L1, L2; 2BeiDou: B1, B2; Galileo: E1, E5a, E5b, AltBOC

Interface	Module	Description
Cellular Modem	CoreLP-WWG and CoreHP-WWG only	1 x Cellular Modem, LTE-Advanced, including LTE-FDD and LTE-TDD, and UMTS. Up to 24 bands worldwide; 600Mbps downlink speed, 150Mbps uplink speed. 4G global coverage with fall back to 3G.
Accelerometer	CoreHP-WW, CoreHP-WWG, and CoreHP-WWU only	1 x Internal sensor, 3-axis gyroscope, 3-axis accelerometer
UHF RTK Radio	CoreHP-WWU only	1 x 430 MHz to 473 MHz UHF RTK Radio

6.3 Environmental Specifications

6.3.1 Temperature

Operating Temperature (°C)	Storage Temperature (°C)
-40 to +60	-40 to +85

6.3.2 Protection Against Water, Dust, and Sand

Protection	Specification
IP66/IP67	IEC 60529 IPx6, IPx7, IP7x

6.3.3 Humidity

Protection
95% Non-Condensing IEC 60068-2-30, +25°C to +55°C, >95%RH, 6*24 h

6.3.4 Shock and Vibration

Parameter	Specification
Vibration	MIL-STD-810G Fig.514.6C-3; Category 4, (10-500 Hz; 2,24 g_{rms}); 1 h/axis (xyz) Fig. 514.6E-1; Category 24, (20-2000 Hz; 7,7 g_{rms}); 1,5 h/axis (xyz)
Resonant Frequencies	IEC 60068-2-6 sinusoidal vibration, Test Fc, 5 Hz to 2000 Hz, 3 0mm p-p, 5 g, 1 sweep each axis (xyz)
Shock	IEC 60068-2-27 Test Ea, 60 g, 6 ms, semi-sinusoidal, ±3 shocks each axis. Total of 18 shocks

 © Leica Geosystems

6.4 FCC Statement (Applicable for U.S.)

This equipment has been tested and found to comply with the limits for a Class A digital device, pursuant to Part 15 of the FCC Rules. These limits are designed to provide reasonable protection against harmful interference when the equipment is operated in a commercial environment. This equipment generates, uses, and can radiate radio frequency energy and, if not installed and used in accordance with the instruction manual, may cause harmful interference to radio communications. Operation of this equipment in a residential area is likely to cause harmful interference, in which case the user will be required to correct the interference at their own expense.

This equipment generates, uses and can radiate frequency energy and, if not installed and used in accordance with the instructions, may cause harmful interference to radio communication. However, there is no guarantee that interference will not occur in a particular installation. If this equipment does cause harmful interference to radio or television reception, which can be determined by turning the equipment off and on, the user is encouraged to try to correct the interference by one or more of the following measures:

- Reorient or relocate the receiving antenna.
- Increase the separation between the equipment and the receiver.
- Connect the equipment into an outlet on a circuit different from that to which the receiver is connected.
- Consult the dealer or an experienced radio/TV technician for help.

Changes or modifications not expressly approved by Leica Geosystems for compliance could void the user’s authority to operate the equipment.

7 Appendix A – Connector Pinout

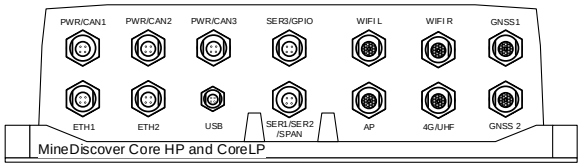

	M12-5A-M	M12-5A-F	M12-5A-F	M12-12A-F	M12-4D-F	M12-4D-F	M8-4A-F	M12-8A-M
pin#	**PWR/CAN1**	**PWR/CAN2**	**PWR/CAN3**	**SERIAL3/GPIO**	**ETH1**	**ETH2**	**USB**	**SERIAL1/SERIAL2**
1	PWR-IN (*1)	PWR-OUT (*2)	PWR-OUT (*2)	GPIN_VOUT (*3)	ETH1_TX+	ETH2_TX+	USB_5V	13.7V OUT (*5)
2	CAN1_H	CAN2_H	CAN3_H	SERIAL3_TX	ETH1_RX+	ETH2_RX+	USB_D+	SERIAL1_TX
3	0V	0V	0V	SERIAL3_RTS	ETH1_TX-	ETH2_TX-	USB_GND	VRF (*6)
4	CAN1_L	CAN2_L	CAN3_L	SERIAL3_RX	ETH1_RX-	ETH2_RX-	USB_D-	SERIAL1_RX
5	NC	NC	NC	SERIAL3_CTS				SERIAL2_TX (*9)
6				GPIN_1				PPS (*6)
7				GPIN_2				SERIAL2_RX (*9)
8				GPIN_3				GND
9				GPO_1 (*4)				
10				SERIAL3_GND				
11				GPI_GND				
12				GPO_GND				

*1 Input voltage range 9-36V
*2 Output voltage is a protected version of PWR-IN. Software switchable.
*3 Output voltage for use with GPIN's (9-36V @ 260mA max). Always enabled.
*4 GPOUT voltage 9-36V @ 260mA max. Software switchable
*5 Regulated 13.8V @ 1A max. Software switchable
*6 Only applicable to IronMan when using SPAN

SERIAL3 can be configured (in software) to operate in either RS232 (default) or RS422 modes.
RS485 mode is available after selecting RS422 mode and specifying half-duplex.

M12-12A-F pin#	M12-8A-M pin#	RS232	RS422	RS485 Half Duplex
2	2	SERIAL3_TX	SERIAL3_TX+	SERIAL3_A (*7)
3	5	SERIAL3_RTS	SERIAL3_TX-	SERIAL3_B (*8)
4	4	SERIAL3_RX	SERIAL3_RX+	SERIAL3_A (*7)
5	7	SERIAL3_CTS	SERIAL3_RX-	SERIAL3_B (*8)
10	8	SERIAL3_GND	SERIAL3_GND	SERIAL3_GND

*7 In RS485 half duplex mode, both SERIAL_3A signals need to be connected together externally.
*8 In RS485 half duplex mode, both SERIAL_3B signals need to be connected together externally.
*9 RS232 5wire interface cables (using M12-8A-M) will use pin5=RTS (output) and pin7=CTS (input)

REV	DATE	DESCRIPTION	DRAWN	CHECK	APPRVD
0.1	30 April 2018	Initial Draft	S.Court		

Hexagon Mining Pty Ltd
270 Gladstone Road
Dutton Park QLD 4102
Australia
Ph +61 7 3117 8900

HEXAGON MINING

©LEICA GEOSYSTEMS PTY LTD
This document and any information or descriptive matter contained therein is communicated in confidence and is the copyright property of LEICA GEOSYSTEMS PTY LTD, part of **Hexagon**. Neither the whole nor any extract may be disclosed, loaned, copied, or used in manufacturing or tendering purposes without their written consent.

UNLESS OTHERWISE SPECIFIED DIMENSIONS ARE IN MILLIMETERS
TOLERANCES: <100mm ±2mm; 100-300mm ±5mm; 300-3000mm ±20mm; >3000mm ±100mm

MATERIAL
FINISH
SHEET 1 OF 1
SCALE -

TITLE: CoreHP, CoreLP, External Connector PinOut
DWG NO.
SIZE A4
PART NO.
REV 0.1

8 Appendix B – Universal Antenna Bracket

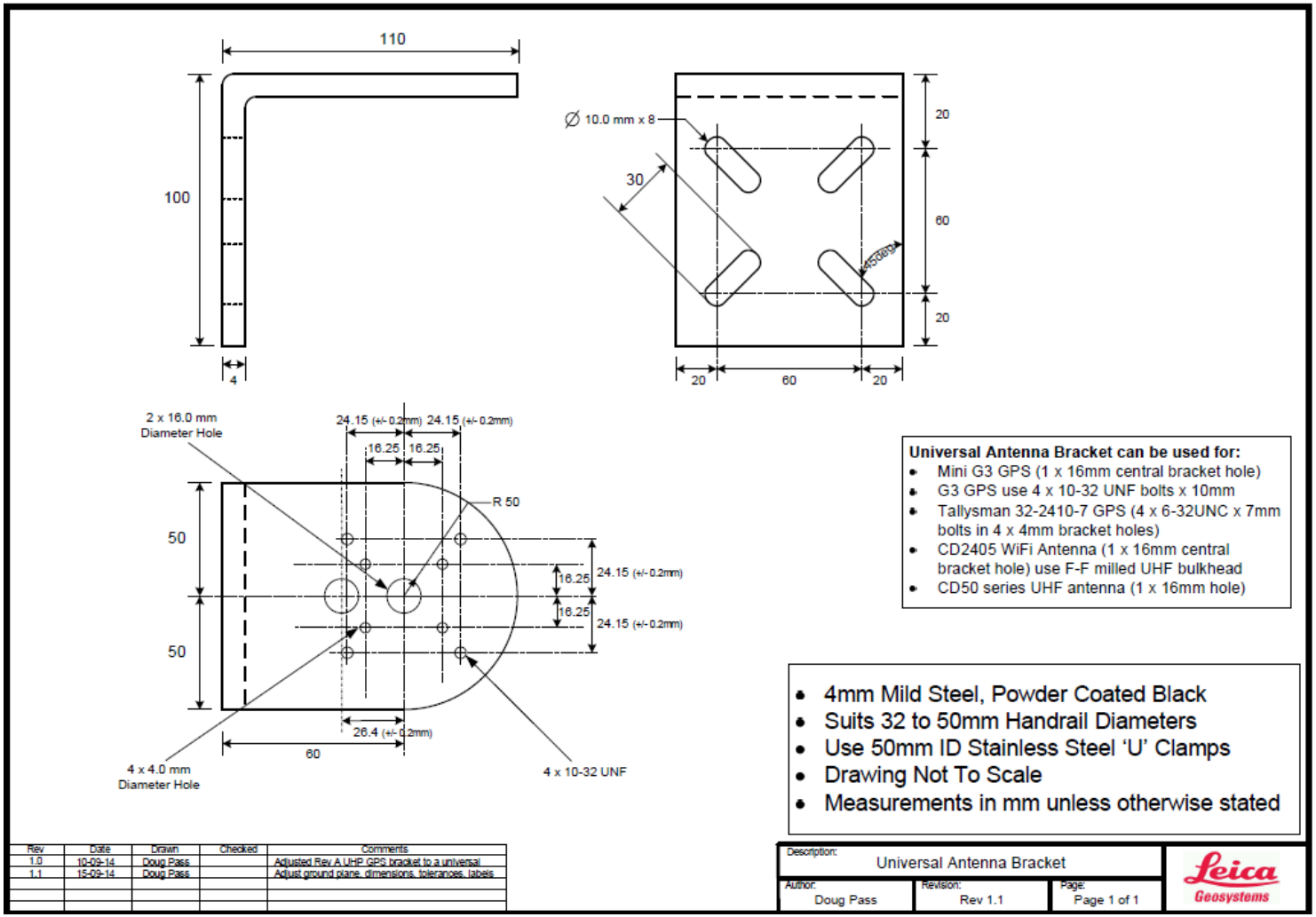

9 Appendix C: HxGN MineDiscover Core FCC Maximum Permissible Exposure Calculations

Reference: FCC document ‘Evaluating Compliance with FCC Guidelines for Human Exposure to Radiofrequency Electromagnetic Fields.

From herein this document is referred to as the ‘FCC Guideline to MPE’ document.

9.1 CoreHP and CoreLP Intentional Radiators

The CoreHP and CoreLP units comprise the following RF intentional radiators

9.1.1 Wi-Fi

Radio: DoodleLabs ACM-DB-2, Max Power 27 dBm (500 mW)

Antenna: MobileMark OD6-2400MOD2-BLK-SP-35, 6 dBi, 2400 GHz to 2500 MHz.

Reference documents:

https://www.doodlelabs.com/products/wi-fi-band-radio-transceivers/data-sheet-acm-db-2/

MobileMark OD6 data sheet, ‘antenna-spec-140-od-2400.pdf’.

9.1.2 GSM (LTE, 4G)

Radio: Sierra Wireless EM7565 M.2, LTE and UMTS module, Max Power 23 dBm (200 mW)

Antenna: RMM-UMB-DN-BLK; antenna gain 3 dBi, 750-1250MHz, 2100-2700MHz and 5 dBi, 1650-2000 GHz.

Refer documents AirPrime EM7565 Product Technical Specification and RMM-UMB-DN-BLK Antenna Specification for further information.

9.2 MPE Calculations

9.2.1 MPE Formula

The FCC Guide to MPE document section 3 ‘Methods of Predicting Human Exposure’ page 17, advises to use the following formula

$S = P \cdot G / 4 \cdot \pi \cdot R^2$

- ⇨ $R = (P \cdot G / 4 \cdot \pi \cdot S)^{0.5}$

Where

S = Power Density (MPE) mW/cm^2

P = Power input to antenna (power output from radio) (mW)

G = Power gain of antenna relative to isotropic radiator (converted from dBi)

R = Distance from antenna (cm)

9.2.2 Wi-Fi MPE Calculations

Referring to The FCC Guide to MPE document, Appendix A, Table 1 (B) Limits for General Population/Uncontrolled exposure (1.5 GHz to 100 GHz).

$S = 1.0\ mW/cm^2$

P = 27 dBm = 500 mW (Reference: ACM-DB-2 data sheet)

G = 6 dBi = 4 (Reference: MobileMark OD6-2400MOD2-BLK-SP-35 data sheet)

- ⇨ $R = (P \cdot G / 4 \cdot \pi \cdot S)^{0.5}$
- ⇨ $R = (500 \cdot 4 / 4 \cdot \pi \cdot 1)^{0.5}$
- ⇨ R = 12.62 cm

 © Leica Geosystems

9.2.3 GSM (LTE, 4G) MPE Calculations

The EM7565 transmits at different power levels dependent on its transmit frequency. The calculations shown here are for the worst-case scenario (Maximum required R)

9.2.3.1 GSM 300 to 1500 MHz

Referring to The FCC Guide to MPE document, Appendix A, Table 1 (B) Limits for General Population/Uncontrolled exposure (300 MHz to 1500 MHz).

S = f/1500 = 750/1500 = 0.5 mW/cm^2

P = 23 dBm = 200 mW (Ref: EM7565 data sheet, Table 4-6 Conducted Tx power tolerances.)

G = 3 dBi = 2 (Reference: RMM-UMB-DN-BLK data sheet)

- ⇨ $R = (P \cdot G / 4 \cdot \pi \cdot S)^{0.5}$
- ⇨ $R = (200 \cdot 2 / 4 \cdot \pi \cdot 0.5)^{0.5}$
- ⇨ R = 7.98 cm

9.2.3.2 GSM 1.5 GHz to 2.7 GHz

Referring to The FCC Guide to MPE document, Appendix A, Table 1 (B) Limits for General Population/Uncontrolled exposure (1.5GHz to 100GHz).

S = 1.0 mW/cm^2

P = 23 dBm = 200 mW (ref EM7565 data sheet, Table 4-6 Conducted Tx power tolerances.)

G = 5 dBi = 3.162 (ref RMM-UMB-DN-BLK data sheet, 5dBi @ 1650-2000MHz)

- ⇨ $R = (P.G / 4.\pi.S)^{0.5}$
- ⇨ $R = (200 \times 3.162 / 4.\pi . 1)^{0.5}$
- ⇨ R = 7.09 cm

9.2.4 Simultaneous Transmission (WLAN and GSM) MPE Calculations

MPE, S_{TOT} <= 1.0mW/cm^2 at R = 20cm

Where $S_{TOT} = S_{WLAN} + S_{GSM}$

Using formula $S = P.G / 4.\pi.R^2$

$S_{WLAN} = P.G / 4.\pi.R^2 = (500 \times 4) / (4. \pi. 20^2) = 0.398$ mW/cm^2

$S_{GSM\ (300to1500MHz)} = P.G / 4.\pi.R^2 = (200 \times 2) / (4. \pi. 20^2) = 0.0796$ mW/cm^2

$S_{GSM\ (1.5to100GHz)} = P.G / 4.\pi.R^2 = (200 \times 3.162) / (4. \pi. 20^2) = 0.126$ mW/cm^2

- ⇨ $S_{TOT} = 0.398 + 0.126 = 0.524$ mW/cm^2

10 Glossary

Term	Definition
EMC	Electromagnetic Compatibility
GNSS	Global Navigation Satellite Systems
GPS	GPS is the shortened term for NAVSTAR GPS, which stands for Navigation System with Time and Ranging Global Positioning System.
g_{rms}	Unit of measure of force or acceleration due to gravity, where g is a unit of force (g = gravity) and rms is root mean square.
LED	Light-Emitting Diode
MPE	Maximum Permissible Exposure
RTK	Real Time Kinematic. Describes the procedure of resolving the phase ambiguity at the GPS receiver, so that the need for post-processing is removed.
SBAS	Satellite Based Augmentation System. SBAS comprises of a number of ground stations at surveyed points. The ground stations take measurements of GPS satellites, their signals, and environmental factors, which may affect the signals received by users, and create adjustment messages to send to one or more satellites for broadcast to users.

© Leica Geosystems

About Hexagon Mining

Mining depends on precision, accuracy, and safety. Mines must find ways to integrate, automate, and optimize critical workflows for a competitive edge. Now more than ever, the industry must cut costs while improving safety.

Hexagon Mining is the only company to solve these challenges with proven technologies for planning, operations, and safety.

We bring surveying, design, fleet management, production optimization, and collision avoidance together in a life-of-mine solution that connects people and processes. Our customers are safer, more productive, and can make sense of their data.

Headquartered in Tucson, Arizona, with offices worldwide, Hexagon Mining is shaping smart change by helping to connect all parts

of a mine with technologies that make sense of data in real time. Hexagon Mining is built on more than a century of expertise and innovation. Our solutions are tailored to your needs and delivered on your terms – short term, long term, for the life of your mine.

Mining is part of Hexagon, a leading global provider of information technologies that drive quality and productivity across

geospatial and industrial enterprise applications. Learn more at hexagonmining.com and follow us @HexagonMining.

Hexagon's solutions integrate sensors, software, domain knowledge, and customer workflows into intelligent information ecosystems that deliver actionable information. They are used in a broad range of vital industries.

Hexagon (Nasdaq Stockholm: HEXA B) has approximately 18,000 employees in 50 countries and net sales of approximately 3.3bn USD. Learn more at hexagon.com and follow us @HexagonAB.

Visit us at hexagonmining.com