TIMES MICROWAVE SYSTEMS

LMR®-400
Flexible Low Loss Communications Coax

Ideal for...

- Drop-in replacement for RG-8/9913 Air-Dielectric type Cable
- Jumper Assemblies in Wireless Communications Systems
- Short Antenna Feeder runs
- Any application (e.g. WLL, GPS, LMR, WLAN, WISP, WiMax, SCADA, Mobile Antennas) requiring an easily routed, low loss RF cable
- **NEW!** Times Protect® LP-18-400 protector-series

- **LMR®** standard is a UV Resistant Polyethylene jacketed cable designed for 20-year service outdoor use. The bending and handling characteristics are significantly better than air-dielectric and corrugated hard-line cables.
- **LMR®- DB** is identical to standard LMR plus has the advantage of being watertight. The addition of waterproofing compound in and around the foil/braid insures continuous reliable service should the jacket be inadvertently damaged during installation or in the future.
- **LMR®- FR** is a non-halogen (non-toxic), low smoke, fire retardant cable designed for in-building runs that can be routed anywhere except air handling plenums. LMR-FR is UL/NEC & CSA rated'CMR' and 'FT4' respectively, meets FAA FAR25 requirements and is MSHA-P for mining applications.
- **LMR®- FR-PVC** is a general-purpose indoor cable and has a UL/NEC & CSA rating of 'CMR' and 'FT4' respectively. It is less expensive than LMR-FR, however it emits toxic fumes (HCL) and greater smoke density when burned.
- **LMR®- PVC** is designed for low loss general-purpose applications and is somewhat more flexible than the standard polyethylene jacketed LMR.
- **LMR®- PVC-W** is a white-jacketed version of LMR-PVC for marine and other applications where color compatibility is desired.

- **Flexibility** and bendability are hallmarks of the LMR-400 cable design. The flexible outer conductor enables the tightest bend radius available for any cable of similar size and performance.
- **Low Loss** is another hallmark feature of LMR-400. Size for size LMR has the lowest loss of any flexible cable and comparable loss to semirigid hard-line cables.
- **RF Shielding** is 50 dB greater than typical single shielded coax (40 dB). The multi-ply bonded foil outer conductor is rated conservatively at > 90 dB (i.e. >180 dB between two adjacent cables).
- **Weatherability**: LMR-400 cables designed for outdoor exposure incorporate the best materials for UV resistance and have life expectancy in excess of 20 years.
- **Connectors**: A wide variety of connectors are available for LMR-400 cable, including all common interface types, reverse polarity, and a choice of solder or non-solder center pins. Most LMR connectors employ crimp outer attachment using standard hex crimp sizes.
- **Cable Assemblies**: All LMR-400 cable types are available as pre-terminated cable assemblies. Refer to the section on FlexTech for further details.

Part Description

Part Number	Application	Jacket	Color	Stock Code
LMR-400	Outdoor	PE	Black	54001
LMR-400-DB	Outdoor/Watertight	PE	Black	54091
LMR-400-FR	Indoor/Outdoor Riser CMR	FRPE	Black	54030
LMR-400-FR-PVC	Indoor/Outdoor Riser CMR	FRPVC	Black	54073
LMR-400-PVC	General Purpose	PVC	Black	54218
LMR-400-PVC-W	General Purpose	PVC	White	54204

Construction Specifications

Description	Material	In.	(mm)
Inner Conductor	Solid BCCAI	0.108	(2.74)
Dielectric	Foam PE	0.285	(7.24)
Outer Conductor	Aluminum Tape	0.291	(7.39)
Overall Braid	Tinned Copper	0.320	(8.13)
Jacket	(see table above)	0.405	(10.29)

Mechanical Specifications

Performance Property	Units	US	(metric)
Bend Radius: installation	in. (mm)	1.00	(25.4)
Bend Radius: repeated	in. (mm)	4.0	(101.6)
Bending Moment	ft-lb (N-m)	0.5	(0.68)
Weight	lb/ft (kg/m)	0.068	(0.10)
Tensile Strength	lb (kg)	160	(72.6)
Flat Plate Crush	lb/in. (kg/mm)	40	(0.71)

Environmental Specifications

Performance Property	°F	°C
Installation Temperature Range	-40/+185	-40/+85
Storage Temperature Range	-94/+185	-70/+85
Operating Temperature Range	-40/+185	-40/+85

Electrical Specifications

Performance Property	Units	US	(metric)
Velocity of Propagation	%	85	
Dielectric Constant	NA	1.38	
Time Delay	nS/ft (nS/m)	1.20	(3.92)
Impedance	ohms	50	
Capacitance	pF/ft (pF/m)	23.9	(78.4)
Inductance	uH/ft (uH/m)	0.060	(0.20)
Shielding Effectiveness	dB	>90	
DC Resistance			
Inner Conductor	ohms/1000ft (/km)	1.39	(4.6)
Outer Conductor	ohms/1000ft (/km)	1.65	(5.4)
Voltage Withstand	Volts DC	2500	
Jacket Spark	Volts RMS	8000	
Peak Power	kW	16	

Attenuation vs. Frequency (typical)

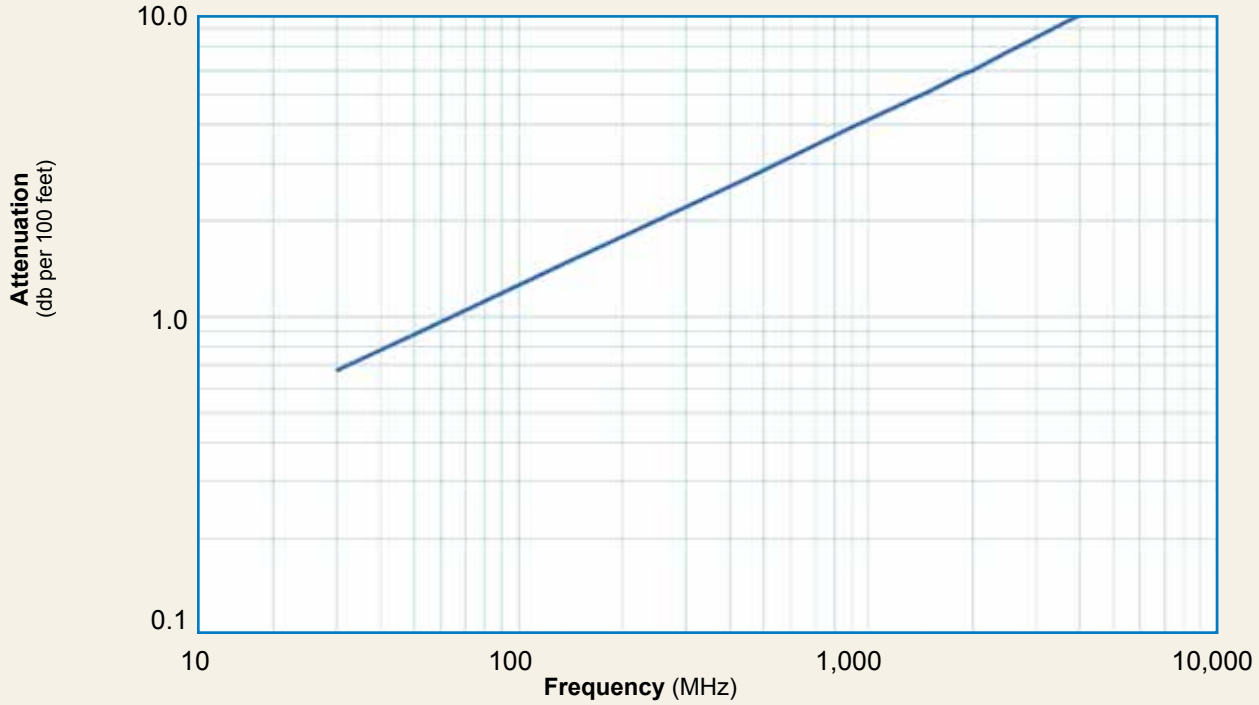

Frequency (MHz)	30	50	150	220	450	900	1500	1800	2000	2500	5800
Attenuation dB/100 ft	0.7	0.9	1.5	1.9	2.7	3.9	5.1	5.7	6.0	6.8	10.8
Attenuation dB/100 m	2.2	2.9	5.0	6.1	8.9	12.8	16.8	18.6	19.6	22.2	35.5
Avg. Power kW	3.33	2.57	1.47	1.20	0.83	0.58	0.44	0.40	0.37	0.33	0.21

Calculate Attenuation =

$(0.122290) \cdot \sqrt{FMHz} + (0.000260) \cdot FMHz$ (interactive calculator available at http://www.timesmicrowave.com/cable_calculators)

Attenuation:

VSWR=1.0 ; Ambient = +25°C (77°F)

Power:

VSWR=1.0; Ambient = +40°C; Inner Conductor = 100°C (212°F); Sea Level; dry air; atmospheric pressure; no solar loading

TIMES MICROWAVE SYSTEMS

LMR®-400
Flexible Low Loss Communications

Connectors

Interface	Description	Part Number	Stock Code	VSWR** Freq.	(GHz)	Coupling Nut	Inner Contact Attach	Outer Contact Attach	Finish* Body /Pin	Length in	(mm)	Width in	(mm)	Weight lb	(g)
1. 7-16 DIN Female	Straight Jack	TC-400-716-FC	3190-376	<1.25:1	(2.5)	NA	Solder	Clamp	S/S	1.6	(41)	1.13	(28.7)	0.281	(127.5)
2. 7-16 DIN	Right Angle	TC-400-716M-RA-D	3190-2598	<1.35:1	(6)	Hex	Solder	Crimp	A/S	1.7	(43..20	1.98	(50.3)	0.374	(169.5)
3. 7-16 DIN Male	Straight Plug	EZ-400-716M-X	3190-2524	<1.25:1	(6)	Hex	Spring Finger	Crimp	A/G	1.6	(39.5)	1.38	(35)	0.277	(126.0)
4. 7-16 DIN Male	Straight Plug	TC-400-716-MC	3190-279	<1.25:1	(2.5)	Hex	Solder	Clamp	S/S	1.4	(36)	1.40	(35.6)	0.268	(121.6)
5. 7-16 DIN Male	Right Angle	TC-400-716MC-RA	3190-1671	<1.25:1	(<3)	Hex	Solder	Clamp	A/S	2.4	(61.5)	1.88	(47.8)	0.35	(159)
6. 7-16DIN Male	Right Angle	EZ-400-716M-RA-X	3190-2545	<1.35:1	(6)	Hex	Spring Finger	Crimp	A/G	1.6	(41.7)	1.75	(44.3)	0.374	(0.17)
7. BNC Male	Straight Plug	TC-400-BM	3190-318	<1.25:1	(2.5)	Knurl	Solder	Crimp	N/S	1.7	(43)	0.56	(14.2)	0.063	(28.6)
8. BNC Male	Straight Plug	EZ-400-BM-X	3190-2852	<1.35:1	(2)	Knurl	Spring Finger	Crimp	A/G	1.7	(42.7)	0.56	(14.2)	0.066	(29.9)
9. BNC Male	Right Angle	EZ-400-BM-RA-X	3190-2847	<1.35:1	(2)	Knurl	Spring Finger	Crimp	A/G	1.9	(48.0)	1.32	(33.5)	0.097	(44.0)
10. HN Male	Straight Plug	TC-400-HNM	3190-923	<1.25:	(<1)	Knurl	Solder	Clamp	S/G	2.3	(59.2)	0.88	(22.4)	0.25	(113.4)
11. HN Male	Right Angle	TC-400-HNM-RA	3190-2541	<1.25:1	(2.5)	Hex	Solder	Crimp	A/G	1.6	(41.4)	1.56	(39.6)	0.198	(90.0)
12. QDS Male	Straight Plug	TC-400-QDSM	3190-620	<1.25:	(<3)	Knurl	Solder	Clamp	A/G	1.8	(46.6)	1.00	(25.4)	0.25	(113.4)
13. UHF Male	Straight Plug	EZ-400-UM	3190-997	<1.25:1	(2.5)	Knurl	Spring Finger	Crimp	N/G	1.8	(48)	0.80	(20.3)	0.076	(34.4)
14. Mini-UHF	Straight Plug	TC-400-MUHF	3190-520	<1.25:1	(2.5)	Knurl	Solder	Crimp	N/G	1.1	(28)	0.50	(12.7)	0.020	(9.1)
15. N Female	Straight Jack	TC-400-NFC	3190-299	<1.25:1	(2.5)	NA	Solder	Clamp	N/S	1.6	(41)	0.75	(19.1)	0.119	(54.0)
16. N Female	Straight Jack	EZ-400-NF-X	3190-2818	<1.25:1	(2.5)	NA	Spring Finger	Crimp	N/G	1.8	(45)	0.66	(16.8)	0.105	(47.6)
17. N Female	Straight Jack	TC-400-NF-X	3190-2815	<1.25:1	(2.5)	NA	Solder	Crimp	N/G	1.8	(45)	0.66	(16.8)	0.105	(47.6)
18. N Female	Bulkhead Jack	EZ-400-NF-BH	3190-518#	<1.25:1	(2.5)	NA	Spring Finger	Crimp	N/G	1.8	(46)	0.88	(22.4)	0.102	(46.3)
19. N Female	Bulkhead Jack	TC-400-NFC-BH (A)	3190-872	<1.25:1	(2.5)	NA	Solder	Clamp	A/G	1.8	(46)	0.88	(22.4)	0.145	(65.8)
20. N Male	Straight Plug	SC-400-NM	3190-1454	<1.25:1	(2.5)	Knurl	Solder	Crimp	N/G	1.5	(38)	0.75	(19.1)	0.090	(40.8)
21. N Male	Straight Plug	TC-400-NMC	3190-6077	<1.25:1	(2.5)	Knurl	Solder	Clamp	N/G	1.5	(38)	0.70	(17.8)	0.121	(54.9)
22. N Male	Straight Plug	EZ-400-NMC-2-D	3190-2640	<1.25:1	(2.5)	Hex/Knurl	Spring Finger	Clamp	N/G	1.5	(38)	0.75	(19.1)	0.121	(54.9)
23. N Male	Straight Plug	EZ-400-NMH-X	3190-2590	<1.25:1	(10)	Hex/Knurl	Spring Finger	Crimp	A/G	1.5	(38)	0.89	(22.6)	0.103	(46.8)
24. N Male	Straight Plug	TC-400-NMH-X	3190-2626	<1.25:1	(10)	Hex/Knurl	Solder	Crimp	A/G	1.5	(38)	0.89	(22.6)	0.113	(51.3)
25. N Male	Straight Plug	EZ-400-NMK-D	3190-661	<1.25:1	(10)	Knurl	Spring Finger	Crimp	S/G	1.5	(38)	0.75	(22.6)	0.113	(51.3)
26. N Male	Right Angle	EZ-400-NMH-RA-X	3190-2638	<1.35:1	(6)	Hex/Knurl	Spring Finger	Crimp	A/G	1.87	(47)	1.42	(36.0)	0.177	(80.2)
27. N Male	Right Angle	TC-400-NMH-RA-SS	3190-1668	<1.25:1	(2.5)	Hex	Solder	Crimp	SS/G	1.5	(38.1)	0.89	(2.6)	0.130	(59.0)
28. N Male	Right Angle	TC-400-NMH-RA-D	3190-2293#	<1.35:1	(6)	Hex/Knurl	Solder	Crimp	A/G	1.8	(46)	1.25	(31.8)	0.130	(59.0)
29. N Male	Right Angle	TC-400-NMC-RA (A)	3190-870	<1.35:1	(2.5)	Hex	Solder	Clamp	A/G	1.8	(46)	1.25	(31.8)	0.150	(68.0)
30. N Male	Reverse Polarity	TC-400-NM-RP	3190-960	<1.25:1	(2.5)	Knurl	Solder	Crimp	N/G	1.5	(38)	0.75	(19.1)	0.090	(40.8)
31. SMA Male	Straight Plug	TC-400-SM-X	3190-3046	<1.25:1	(8)	Hex	Solder	Crimp	N/G	1.2	(29)	0.50	(12.7)	0.032	(14.5)
32. TNC Female	Reverse Polarity	TC-400-TF-RP	3190-1063	<1.25:1	(2.5)	NA	Solder	Crimp	N/G	1.8	(46)	0.55	(14.0)	0.074	(33.6)
33. TNC Female	Reverse Polarity	EZ-400-TF-RP	3190-795	<1.25:1	(2.5)	NA	Spring Finger	Crimp	A/G	1.8	(46)	0.55	(14.0)	0.074	(33.6)
34. TNC Male	Straight Plug	TC-400-TM-X	3190-2532	<1.25:1	(6)	Hex/Knurl	Solder	Crimp	A/G	1.9	(48)	0.67	(17.5)	0.075	(34.3)
35. TNC Male	Straight Plug	EZ-400-TM-X	3190-2533	<1.25:1	(6)	Hex/Knurl	Spring Finger	Crimp	A/G	1.9	(48)	0.67	(17.5)	0.075	(34.3)
36. TNC Male	Reverse Polarity	TC-400-TM-RP	3190-1062	<1.25:1	(2.5)	Knurl	Solder	Crimp	N/G	1.7	(43)	0.59	(15.0)	0.074	(33.6)
37. TNC Male	Reverse Polarity	EZ-400-TM-RP	3190-794	<1.25:1	(2.5)	Knurl	Spring Finger	Crimp	A/G	1.7	(43)	0.59	(15.0)	0.074	(33.6)
38. TNC Male	Right Angle	TC-400-TM-RA-D	3190-2671	<1.35:1	(6)	Hex/Knurl	Solder	Crimp	A/G	1.4	(35)	1.41	(35.8)	0.130	(59.0)
39. TNC Male	Right Angle	EZ-400-TM-RA-X	3190-2800	<1.24:1	(6)	Hex	Spring Finger	Crimp	A/G	2.0	(50.0)	0.62	(15.7)	0.130	(59.0)

* Finish metals: N=Nickel, S=Silver, G=Gold, SS=Stainless Steel, A=Alballoy **VSWR spec based on 3 foot cable with a connector *Available in bulk pack

Install Tools and Hardware

Install Tools and Hardware

Type	Part Number	Stock Code	Description
Crimp Tool	HX-4	3190-200	Crimp Handle
Crimp Dies	Y1719	3190-202	.429" Hex Dies
Crimp Tool	CT-400/300	3190-666	Crimp tool for LMR 400 connectors
Crimp Rings	CR-400	3190-830	Crimp rings for TC/EZ-400 connectors (package of 10)
Strip Tool	ST-400C-2	3190-1972	Prep tool for EZ-400-NMC-2 two piece clamp style connector
Strip Tool	CST-400	3192-004	Combination prep tool for LMR-400 crimp and clamp style connectors
Mid-Span Strip Tool	GST-400	3190-2174	For ground strap attachment
Replacement Blades	RB-456	3190-421	Replacement blades for Strip Tool
Deburr Tool	DBT-U	3192-001	Removes center conductor rough edges
Cutting Tool	CCT-01	3190-1544	Cable end flush cut tool
Replacement Blade	RB-01	3190-1609	Replacement blade for cutting tool
Tool Kit	TK-400EZ	3190-1601	Tool kit for LMR-400 Crimp Connectors (includes CCT-01, CST-400, CT-400/300, Tool Pouch)
Replacement Blade Kit	RB-CST	3192-086	Replacement blade kit for all CST strip tools
Ground Kit	GK-S400TT	GK-S400TT	Standard Grounding Kit (each)
Hoisting Grip	HG-400T	HG-400T	Laced Type (each)

ANTCOM CORPORATION . 367 Van Ness Way, Suite 602 . Torrance, CA 90501 . Tel: (310) 782-1076 . Fax: (310) 782-1086 . E-mail: antennas@antcom.com . http://www.antcom.com

"-HF" for High Iridium/Inmarsat/Thuraya-Rejection Front End Filter Option: -22dB@1616MHz, -34dB@(1625-1660)MHz
"-HFO" for Additional Omnistar Rejection: -27dB@1545MHz

NOTICE OF PROPRIETARY RIGHTS
THIS DOCUMENT CONTAINS CONFIDENTIAL TECHNICAL DATA INCLUDING TRADE SECRETS PROPRIETARY TO ANTCOM CORP. DISCLOSURE OF THIS DATA TO YOU IS EXPRESSLY CONDITIONED UPON YOUR ASSENT THAT ITS USE IS LIMITED TO USE WITHIN YOUR COMPANY ONLY (AND DOES NOT INCLUDE MANUFACTURE OR PROCESSING USES). ANY OTHER USE IS STRICTLY PROHIBITED WITHOUT PRIOR WRITTEN CONSENT OF ANTCOM, CORP.

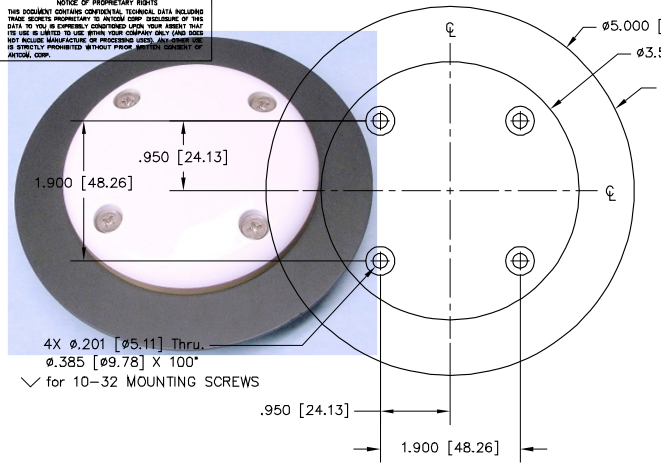

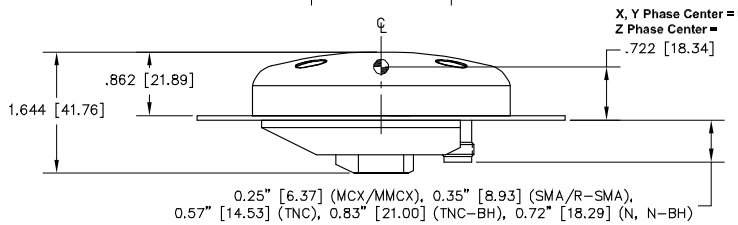

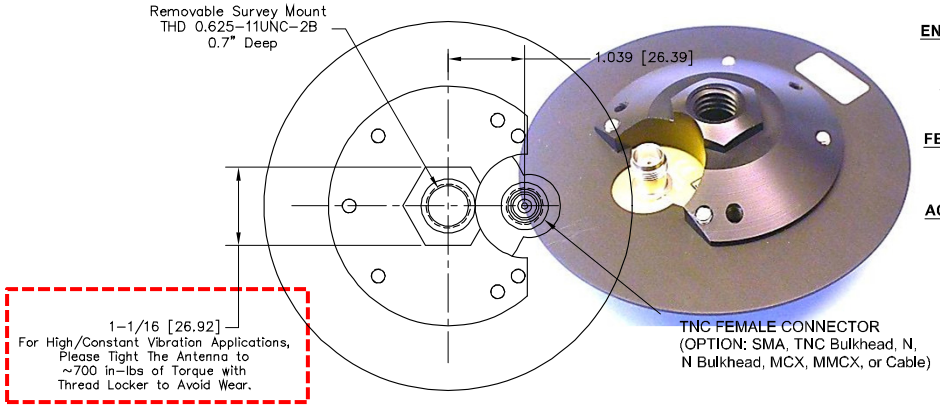

SPECIFICATIONS

REVISIONS				
ZONE	REV	DESCRIPTION	DATE	APPROVED
	A	INITIAL	11/11/11	S.H
	B	NEW MOUNT	5/19/16	S.H

ELECTRICAL:

	L5 GPS E5, E5a, E5b Galileo L5 IRNSS	L2 GPS B2 Compass	L2 GLONASS E6 Galileo B3 Compass	OmniSTAR / L-Band L6 Galileo B1 Compass	L1 GPS E1, E2 Galileo L1 IRNSS	L1 GLONASS
FREQUENCY:	1176.45 ± 12 MHz 1164.45 - 1219.14 MHz 1176.45 ± 15 MHz	1227.60 ± 12 MHz 1207.14 ± 10 MHz	1252.50 ± 7.5 MHz 1266.75 - 1290.75 MHz 1268.52 ± 10 MHz	1542.50 ± 14.0 MHz 1542.50 ± 5.0 MHz 1561.098 ± 10 MHz	1575.42 ± 15.0 MHz 1575.42 ± 17.0 MHz 1575.42 ± 12.0 MHz	1609 ± 7.0 MHz
RADIATION PATTERN:		HEMISPHERICAL				
POLARIZATION:	RHCP	RHCP	RHCP	RHCP	RHCP	RHCP
VSWR:	< 2.0:1	< 2.0:1	< 2.0:1	< 2.0:1	< 2.0:1	< 2.0:1
IMPEDANCE:	50 ohms	50 ohms	50 ohms	50 ohms	50 ohms	50 ohms
ANTENNA GAIN (dBic):						
@ 90 ° (ZENITH):	- 5	+ 2.8	+ 1.1	+ 0.7	+ 3.9	+ 1.3
@ 10 ° Elevation:	- 11	- 3.1	- 5.0	- 6.0	- 3.1	- 5.2
@ 20 ° Elevation:	- 10	- 2.0	- 4.1	- 5.2	- 2.1	- 4.0
@ 30 ° Elevation:	- 9	- 1.1	- 3.0	- 3.0	- 0.0	- 2.0
@ 60 - 90 ° Elevation:	> - 6.5	> 1.8	> 0.8	> -0.7	> + 3.0	> + 0.5
BEAM WIDTH (3dB):	102 Deg.	100 Deg.	97 Deg.	90 Deg.	95 Deg.	96 Deg.
AXIAL RATIO:	1.0 dB	1.5 dB	1 dB	1.5 dB	1.5 dB	3 dB
LIGHTNING PROTECTION:		DC GROUNDING				
LNA GAIN:	35 dB	35 dB	35 dB	33 dB	33 dB	33 dB
LNA NOISE FIGURE:	3.0 dB	3.0 dB	3.0 dB	3.0 dB	3.0 dB	3.0 dB
LNA P1dB Out:	+13 dBm	+13 dBm	+13 dBm	+13 dBm	+13 dBm	+13 dBm
LNA DC POWER:		2.5V/20mA, 3V/29mA, 3.3V/35mA, (2.5-24)V/<50mA				
POWER HANDLING:		1 Watt CW, Optional: 10 Watts 1 Microsec Pulse (-AL-)				

MECHANICAL:

SIZE: DIAMETER: 3.50 in.[88.90 mm]
HEIGHT: 0.86 in. [21.89 mm] - (Optional for Passive)

WEIGHT: 14.5 oz. (411 g)

FINISH: SKYDROL RESISTANT POLYURETHANE ENAMEL
BASE IRIDITE PER MIL-C-5541F CLASS 1A

MATERIAL: 6061-T6 ALUMINUM ALLOY BASE
COMPOSITE RADOME, IMPACT, ABRASION, UV, SOLVENT, SKYDROL RESISTANCE, AND FIRE RETARDANT

CONNECTOR: TNC FEMALE CONNECTOR
(OPTION: SMA, BNC, TNC Bulkhead, N, N Bulkhead, MCX, MMCX)

ENVIRONMENTAL:

TEMPERATURE: -67 °F TO +185 °F [-55 °C TO +85 °C]
70,000 ft.

VIBRATION: > 30 G's
HERMETICALLY SEAL

FEDERAL & MILITARY SPECIFICATIONS:

FAA TSO-C144, DO-160D, D0-228, MIL-C-5541, MIL-E-5400, MIL-I-45208A, MIL-STD-810, AND SAE J1455

ACCEPTANCE TEST PROCEDURE:

ATP-GPS-L1L2-100

QUANTITY REQD	DESCRIPTION	PART NO	FINISH	ITEM NO
4	MOUNTING SCREWS: 10-32, 3/4"	MS24693C274	–	5
1	5" DIA. GROUND PLANE	12G1215P001-B6	–	3
1	SURVEY ANTENNA MOUNT	MTR-3 Rev A		2
			–	

PARTS LIST

P/N: G5Ant-53AT1

SIZE:		LNA:	CABLE'S LENGTH:	CONNECTOR:	COLOR:
1: 2" SQ.	42: ARINC 743	A: WITH LNA	X: NO CABLE	S: SMA; SMB; SMBR; B: BNC	-1: GLOSS WHITE #17925 PER FED-STD-595B
1.9: 1.9" SQ.	53: 3.5" DIA. ON 5" GROUND PLANE	B: WITHOUT LNA		M: MCX; MM: MMCX;MMR: MMCX-R	-2: LUSTERLESS GRAY #36320 PER FED-STD-595B
2: 2.6" DIA.	72: 7" DIA. CHOKE RING			N: N; NB: N-Bulkhead	-3: CAMO GREEN #34094 PER FED-STD-595B
3: 3.5" DIA.	5: Bare on 5In [126mm] Dia. Ground Plane			T: TNC; TB: TNC-Bulkhead	-4: LUSTERLESS BLACK #37038 PER FED-STD-595B
4: MINI ARINC	X.X: Bare on X.XIn Dia. Ground Plane			SMC, SSMC, SSMB, SSMA	-5: DESERT TAN #33446 PER FED-STD-595B

UNLESS OTHERWISE SPECIFIED DIMENSIONS ARE IN INCHES
TOLERANCES ARE:
FRACTIONS ± 1/64 DECIMALS .XX± .015 .XXX± .005 ANGLES ± 1°
TOLERANCE SYM PER ANSI Y14.5
REMOVE ALL BURRS
BREAK EXTERNAL EDGES .005 TO .015
FILLETS R .025 TO R .030
SCREW THREADS PER MIL-S-8879
DIA'S ON A COMMON ℄ ∅ .005
MACHINED SURFACES 125
DO NOT SCALE DRAWING

ORIGINALLY DRAWN	S. HUYNH	NOV-11-11
ORIGINALLY DESIGNED	S. HUYNH	NOV-11-11
UPDATED	S. HUYNH	May-20-15
UPDATE DRAWN	P. TRAN	May-20-15
APPROVED	S. HUYNH	May-20-15

ANTCOM CORP. TORRANCE CALIFORNIA

SURVEY MOUNT
L1L2Glonass/L1L2GPS/OmniStar
G5 ANTENNA

SIZE D | CAGE NO 3CVE1 | DRAWING NO G5Ant-53AT1 | REV B
SCALE 1/1 | SHEET 1 OF 1

MobileMark
antenna solutions

US Office: Tel: 800.648.2800 or +1.847.671.6690
UK Office: Tel: (+44) 1543 459 555
www.mobilemark.com

Omni-Directional Antennas, WiFi 2.4 GHz

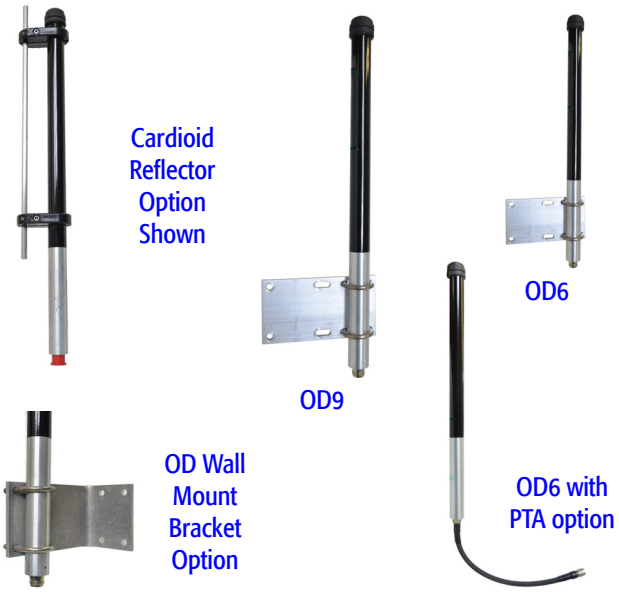

- 3 dBi, 6 dBi, 9 dBi & 12 dBi antennas provide uniform omni coverage
- Unique design allows economical build out
- Mounting kit includes all hardware needed
- Reflector options provide directional beamshaping & sectorization

The OD Series antennas provide omni-directional coverage for WiFi 2.4 GHz applications. Four models are available from 3-12 dBi gain.

These antennas are colinear arrays. Unique phasing cancels out-of-phase current distribution, improving performance. The OD Series are free space antennas; no ground plane is required.

Unique options for the OD series are add-on Reflector Kits that beam shape the omni pattern. Reflector options are available to provide cardioid shape in 90º, 120º & 180º patterns. These can result in improved directional gain and isolation for reduced interference.

The antennas are durable and rugged. They can withstand the harshest environments of snow, wind, rain and ice.

The feed assembly is made of precision machined aluminum components and is irridited for weather protection. These antennas come with all the hardware needed to install it to a mast.

For ISM, Part 15 compliant connectors are available (reverse polarized), please consult your sales representative.

Model #	Freq. (MHz)	Gain	Applications
OD3-2400-BLK	2400-2485	3 dBi	WiFi, ISM, Video
OD6-2400-BLK	2400-2485	6 dBi	WiFi, ISM, Video
OD9-2400-BLK	2400-2485	9 dBi	WiFi, ISM, Video
OD12-2400-BLK	2400-2485	12 dBi	WiFi, ISM, Video

Color options available for above models
WHT-White or BLK-Black

Pigtail Cable Option
1ft (30 cm) RG-8 Cable & RevTNC add "-PTA" to model
Other connectors available

Model	Other Options
ODR9-2400K	Add-on 90º Reflector kit for OD9
ODR9-2400T120K	Add-on 120º Reflector kit for OD9
ODR9-2400T180K	Add-on 180º Reflector kit for OD9

Reflectors are also available for 3, 6 & 12 dBi models

OD-WMK — Wall Mount Bracket

Specifications

Frequency & Gain:	See above
VSWR:	2:1 max over range
Nominal Impedance:	50 ohms
Max. Power (continuous):	100 watts
Vertical Beamwidth (-3 dB point):	
3 dBi Model	55 degrees
6 dBi Model	25 degrees
9 dBi Model	14 degrees
12 dBi Model	7 degrees
Wind Load (flat plate equiv.):	30-40 sq. inches (194-258 sq.cm)
Rated Wind Velocity:	120+ mph (193+kph)
Operating Temp:	-40º to +85º C
Lightning Protection:	External suggested
OD Series Interface:	N Jack (Female)
Antenna Diameter:	1" (25 mm), main mast
Length/Weight:	
3 dBi Models	14", 1.5 lbs (36 cm, 0.7 kg)
6 dBi Models	17", 1.5 lbs (43 cm, 0.7 kg)
9 dBi Models	29", 2.0 lbs (74 cm, 0.9 kg)
12 dBi Model	41", 2.5 lbs (104cm, 1.1 kg)
Mounting Kit:	Mast mount kit included
Mounting Dimensions:	Use mast up to 2.5" (6.4 cm)
Material:	Fiberglass radome with aluminum body
Options:	Reflector Option Kits Pigtail Cable Option Part 15 Reverse Connectors Wall Mount Bracket
Shock & Vibration:	EN 300 019-2-4, IEC 60068
Water Ingress:	IPx5

OD6-2400 Antenna

Omni Directional Antenna
6 dBi, 2400-2485 MHz

These plots can be used for the following models:

OD6-2400
OD6-2400PTA
OD6-2400PT2

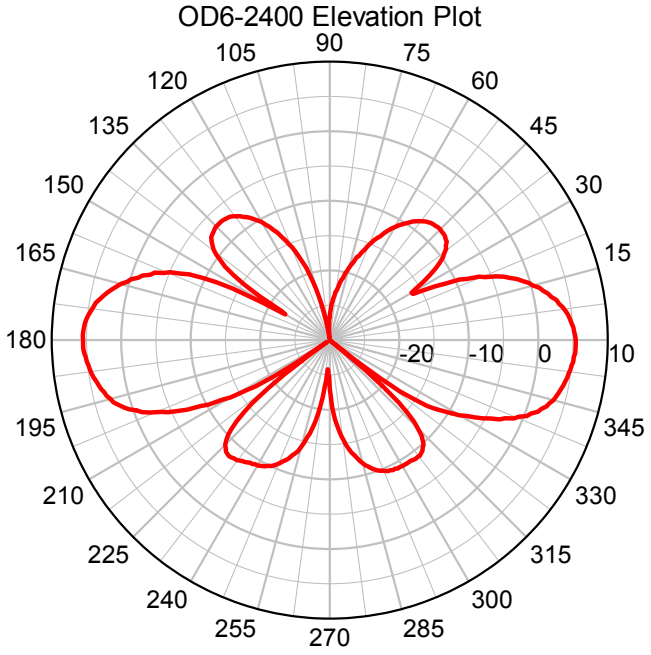

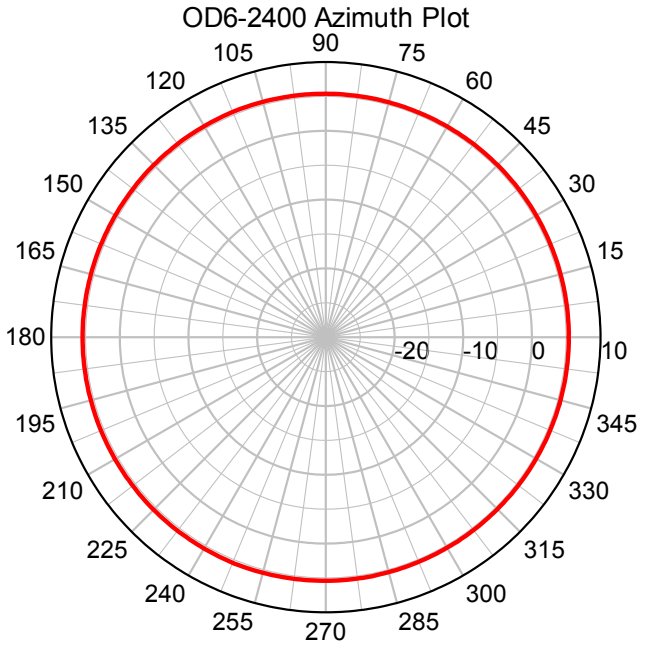

Office & Headquarters: 3900-B River Road, Schiller Park, IL 60176 Tel: 800-648-2800 or 847-671-6690 Fax: 847-671-6715
UK Office: 106 Anglesey Business Park, Hednesford, Staffs. WS12 1NR UK Tel: (+44) 1543-878343 Fax: (+44) 1543-871714
Visit our web page at www.mobilemark.com. Specifications subject to change without notice (7/2005).