Installation and Maintenance Manual

Wirnet iBTS

	Written by	Approved by	Validated by
Name	MGI	YDE	RDU
Entity	DRD	CTO	DRD
Date	08/30/2016	08/30/2016	08/30/2016

History

Date	Modification	Author	Version
03/17/2016	Preliminary version	MGI	0.1
04/06/2016	Removed specification part	MGI	0.2
06/08/2016	Updated accessories list	MGI	0.3
07/05/2016	Updates for IEC 60950-1 compliance	MGI	0.4
07/11/2016	Updates for FCC and IC certification	MGI	0.5
08/30/2016	Minor updates after internal review	MGI	0.6

INDEX

1. Description of the Wirnet iBTS 16
1.1 Modular architecture 16
1.2 Mechanical implementation for standard casing 19
1.2.1 Standard casing 19
1.2.2 Stickers 21
1.3 Mechanical implementation for compact casing 22
1.3.1 Compact casing 22
1.3.2 Stickers 25
1.4 Block Diagram 26
1.4.1 Common functionalities 26
1.4.2 Standard version of Wirnet iBTS 28
1.4.3 “Four Lora Modules” version of Wirnet iBTS 29
1.4.4 Compact version of Wirnet iBTS 30
1.5 Power consumption 31
1.6 Description of the modules 32
1.6.1 CPU module 32
1.6.1.1 Mechanical description 32
1.6.1.2 Connectors and user interfaces 33
1.6.1.3 CPU module characteristics 34
1.6.2 WAN module 36
1.6.2.1 Mechanical description 36
1.6.2.1 Connectors and user interfaces 37
1.6.2.2 WAN module characteristics 38
1.6.2.3 Supported bands 38
1.6.2.3.1 LTE - Europe and APAC Mini PCI Express card 38
1.6.2.3.1 LTE - Americas Mini PCI Express card 39
1.6.3 LoRa module – LoRa LOC 40
1.6.3.1 Mechanical description 40
1.6.3.1.1 Single “LoRa-LOC” module 40

1.6.3.1.2 Four “LoRa-LOC” modules 41
1.6.3.2 Connectors and user interfaces 42
1.6.3.2.1 Single LoRa-LOC module 42
1.6.3.2.2 Four LORA-LOC modules 44
1.6.3.3 LoRa LOC modem characteristics 45
1.6.3.4 Front-end boards 46
1.6.3.4.1 Front-end board - Single module 46
1.6.3.4.2 Front-end board - Four modules 47
1.6.3.5 Modulations and data rates 48
1.6.3.6 Frequency bands and channelization 48
1.6.3.7 Output Power 50
1.6.3.8 Out of band emissions 50
1.6.3.9 Sensitivity 50
1.6.3.10 RSSI and SNR 51
1.6.3.11 Out of band blockers rejection 52
1.6.3.11.1 868MHz 52
1.6.3.11.2 915MHz 53
1.6.3.11.3 923MHz 53
1.7 Description of the accessories 54
1.7.1 PoE injectors 54
1.7.1.1 Indoor Midspan PoE injector 30W 54
1.7.1.2 Indoor Midspan PoE injector 60W 56
1.7.1.3 Outdoor Midspan PoE injector 30W 57
1.7.1.4 Outdoor Midspan PoE injector 60W 59
1.7.2 LoRa antennas 61
1.7.2.1 Omnidirectional antenna 868MHz 3dBi 61
1.7.2.2 Omnidirectional antenna 915MHz 3dBi 62
1.7.2.3 Omnidirectional antenna 915MHz 6dBi 63
1.7.3 Cavity filters 64
1.7.3.1 862-867MHz cavity filter 64
1.7.3.2 920-925MHz cavity filter 65
1.7.4 GNSS and WAN antennas 67

1.7.4.1 GNSS antenna 67
1.7.4.2 LTE antenna 67
1.7.4.3 GNSS/LTE magnetic antenna 68
1.7.5 Cables 69
1.7.5.1 RJ45 PoE cable 69
1.7.5.2 Earthing cables 70
1.7.6 Surge protections 71
1.7.6.1 RF coaxial surge protection 71
1.7.6.2 Indoor Ethernet surge protection 71
1.7.6.3 Outdoor Ethernet surge protection 72
1.7.7 Mounting kits 74
1.7.7.1 Notched V-shaped pole mounting kit 74
1.7.7.2 Universal antenna bracket 74
1.7.7.3 Dome antenna bracket 75
1.7.8 Debug tool 77
2. Regulations 79
2.1 Wirnet iBTS 868 79
2.1.1 Europe / CE 79
2.1.2 India 80
2.1.3 South Africa 81
2.1.4 Saudi Arabia 81
2.1.5 United Arab Emirates 81
2.1.6 Russia 82
2.2 Wirnet iBTS 915 82
2.2.1 USA / FCC 83
2.2.2 Canada / IC 84
2.3 Wirnet iBTS 923 85
2.3.1 Australia 86
2.3.2 Hong-Kong 87
2.3.3 Korea (Republic of) 88
2.3.4 New-Zealand 89
2.3.5 Singapore 90

2.3.6 Japan 91
3. Key parameters to optimize the radio performance 93
3.1 Height of the site 93
3.2 Propagation model vs area type 94
3.3 Fresnel ellipsoid 96
3.4 Co-localization with GSM/UMTS/LTE transmitters 98
3.4.1 Wirnet iBTS 868 100
3.4.2 Wirnet iBTS 915 101
3.4.3 Wirnet iBTS 923 101
4. Installation procedure 102
4.1 How to open the enclosure 102
4.1.1 Standard casing version 102
4.1.2 Compact casing version 103
4.2 Installation topology 106
4.2.1 Single Wirnet iBTS gateway installation 106
4.2.2 Multi-Wirnet iBTS installation 107
4.3 Electric distribution to the Wirnet iBTS 108
4.3.1 Safety 108
4.3.2 Mains supply 109
4.3.3 POE supply 109
4.3.4 Auxiliary power supply 109
4.4 Inserting an additional module inside the enclosure 110
4.5 Mounting of the enclosure 111
4.5.1 General considerations 111
4.5.2 Antennas mountings kits 111
4.5.2.1 GPS, LTE and LoRa antenna considerations 111
4.5.2.2 Distance between antennas 112
4.5.2.2.1 LoRa antenna vs. LTE antennas 112
4.5.2.2.2 LoRa space diversity 113
4.5.2.3 Universal antenna bracket 114
4.5.2.4 Dome antenna bracket 116
4.5.3 Mounting of the compact enclosure 118

4.5.3.1 Compact casing mounting kit 118
4.5.3.2 Wall mounting 118
4.5.3.3 Pole mounting by U-bolt 119
4.5.3.4 Metallic strapping mounting 120
4.5.4 Mounting of the standard enclosure 120
4.5.4.1 Standard casing mounting kit 120
4.5.4.2 Wall mounting 122
4.5.4.3 Pole mounting by U-bolt 122
4.5.4.4 Metallic strapping mounting 123
4.5.5 Mounting of the accessories 124
4.5.5.1 Indoor PoE injectors 124
4.5.5.2 Outdoor PoE injectors 124
4.5.5.3 Indoor Ethernet surge protection 125
4.5.5.4 Outdoor Ethernet surge protection 125
4.5.5.5 RF coaxial surge protection 127
4.5.5.6 Cavity filters 127
4.6 Setting connections 128
4.6.1 Earthing 128
4.6.1.1 Earthing of the Wirnet iBTS mounting kit 129
4.6.1.2 Earthing of the Wirnet iBTS Compact mounting kit 130
4.6.1.3 Earthing of the RF coaxial surge protection 131
4.6.1.4 Earthing of the Ethernet surge protection 131
4.6.1.5 Earthing of the outdoor PoE injector 132
4.6.2 RF antennas 133
4.6.2.1 GNSS antenna 137
4.6.2.2 LTE antenna 138
4.6.2.3 GNSS / LTE combo antenna 139
4.6.2.4 LoRa RF Antenna 139
4.6.2.4.1 Common generalities 139
4.6.2.4.2 Single LoRa module / single omnidirectional antenna 141
4.6.2.4.3 Single LoRa module / dual omnidirectional antennas / diversity 141
4.6.2.4.4 Single LoRa module / single dual polarization antenna 142

4.6.2.4.5 Two LoRa modules / two omnidirectional antennas / diversity 142
4.6.2.4.6 Two LoRa modules / two dual polarization antennas 143
4.6.2.4.7 Three LoRa modules / three sectors antennas 143
4.6.2.4.8 Three LoRa modules / three sectors antennas / dual polarization 144
4.6.2.4.9 Four LoRa modules / single omnidirectional antenna 144
4.6.2.4.10 Four LoRa modules / dual omnidirectional antennas / diversity 145
4.6.2.4.11 Four LoRa modules / dual polarization antenna 145
4.6.3 Ethernet connection 146
4.6.4 Mains supply 148
4.6.5 Auxiliary power supply 148
4.7 Commissioning 150
4.7.1 USIM card 150
4.7.2 Power ON 151
4.7.3 Functional check 151
4.7.4 Configuration 151
4.8 Lighting protections 152
5. Maintenance of the Wirnet iBTS 156
5.1 Simple checks 156
5.1.1 Wirnet iBTS enclosure 156
5.1.2 User interface 156
5.1.3 Cables and antennas 156
5.1.4 PoE injector 157
5.2 Adding or replacing a module 157
5.3 Interfaces for debug or maintenance purposes 157
5.3.1 Proprietary debug interface 157
5.3.2 USB interface 159
5.3.3 ON/OFF button 160
5.3.4 Local WEB maintenance interface 161
5.3.4.1 Configuring network parameters 162
5.3.4.2 Configure credentials 162
6. List of the accessories 163
7. KERLINK support 166

FIGURES

Figure 1: LoRa Network topology 15
Figure 2: Wirnet iBTS external view....17
Figure 3: Wirnet iBTS internal view 17
Figure 4: Enclosure internal view 20
Figure 5: Insertion of the modules inside the enclosure 21
Figure 6: Wirnet iBTS Compact external view 22
Figure 7 : Wirnet iBTS Compact internal view....23
Figure 8: Insertion of the modules inside the cabinet 24
Figure 9: Common Wirnet iBTS block diagram....26
Figure 10: Standard Wirnet iBTS block diagram....28
Figure 11: Wirnet iBTS “4 LoRa modules” block diagram 29
Figure 12: Wirnet iBTS Compact block diagram 30
Figure 13: Mechanical description of the CPU module 32
Figure 14: Connectors and user interfaces of the CPU module 34
Figure 15: Mechanical description of the WAN module....36
Figure 16: Connectors and user interfaces of the CPU module 37
Figure 17: Mechanical description of the LoRa – LOC module....40
Figure 18: Mechanical description of the four LoRa LOC modules configuration....41
Figure 19: Connectors and user interfaces of the LoRa LOC module 43
Figure 20: RF1 and RF2 connectors of the LoRa LOC module 43
Figure 21: Connectors and user interfaces of the 4 LoRa LOC modules....44
Figure 22: Front-end board block diagram 46
Figure 23: Front-end 4 modules board block diagram 47
Figure 24: Example of SNR, RSSI and RSSI+SNR plots at 125KHz BW / SF7 52
Figure 25 : indoor 30W POE injector 55
Figure 26 : 60W POE injector 57
Figure 27 : Outdoor 30W POE injector 59
Figure 28 : Outdoor 60W POE injector 60
Figure 29 : Radiation pattern of omnidirectional 868MHz/3dBi antenna....61
Figure 30 : Radiation pattern of omnidirectional 915MHz/3dBi antenna....62
Figure 31 : Radiation pattern of omnidirectional 915MHz/6dBi antenna....63
Figure 32 : Dimensions of the 862-867MHz cavity filter....64
Figure 33 : Frequency response of the 862-867MHz cavity filter 65
Figure 34 : Dimensions of the 920-925MHz cavity filter....66
Figure 35 : Frequency response of the 920-925MHz cavity filter 66
Figure 36 :RJ45 T-568A plug....70
Figure 37 : P8AX Citel....71
Figure 38 : MJ8-POE-B Citel....72
Figure 39 : PD-OUT/SP11 Microsemi....73
Figure 40 : Dimensions of the notched V shaped plate....74
Figure 41 : Universal antenna bracket dimensions 75
Figure 42 : Dome antenna bracket dimensions....76

Figure 43 : Dome antenna bracket with notched V shaped bolt....77
Figure 44 : WIRMA2 Debug Tool connected to the CPU module....78
Figure 45 : Channels allocation in Australia....86
Figure 46 : Channels allocation proposal in Singapore....87
Figure 47 : Channels allocation proposal in Korea....88
Figure 48 : Channels allocation proposal in New-Zealand....90
Figure 49 : Channels allocation proposal in Singapore....91
Figure 50 : Channels allocation proposal in Japan....92
Figure 51 : Urban (small city) Hata propagation model – RSSI (dBm) vs distance (meters) vs height of the antenna....93
Figure 52 : Rural countryside Hata propagation model - RSSI (dBm) vs distance (meters) vs height of the antenna....94
Figure 53 : Hata propagation model vs area configuration (Height = 12m) – RSSI (dBm) vs distance (m)....95
Figure 54 : Hata propagation model vs area configuration (Height = 30m) – RSSI (dBm) vs distance (m)....95
Figure 55 : Fading effects due to obstacles....96
Figure 56 : Fresnel ellipsoid clearance....97
Figure 57 : Fresnel ellipsoid and earth curvature....97
Figure 58 : Typical antenna gain pattern of a GSM BTS....99
Figure 59 : Typical gain of 3dBi omnidirectional antenna....99
Figure 60 : Typical gain of a sectorial antenna....100
Figure 61: Wirnet iBTS – plastic clips on the lid....102
Figure 62: Wirnet iBTS – 4x M5 screws....103
Figure 63 : Open points of the compact enclosure....104
Figure 64 : Opening of the compact enclosure with screwdriver....105
Figure 65 : Single station installation (with USIM)....106
Figure 66 : Single station installation (No USIM)....106
Figure 67 : Multi-station installation (No USIM)....107
Figure 68 : Power distribution in the installation....108
Figure 69 : Position of the universal antenna support when mounted on the compact enclosure support....113
Figure 70 : Wall mount of the universal antenna bracket....114
Figure 71 : Pole mounting of the universal antenna bracket using strapping....114
Figure 72 : Universal antenna bracket with compact casing mounting kit....115
Figure 73 : LoRa antenna mounted on universal antenna bracket....116
Figure 74 : N connector introduced in the hole of the dome antenna bracket....117
Figure 75 : Antenna installed on the dome antenna bracket....117
Figure 76 : Compact casing mounting kit dimensions....118
Figure 77 : Compact casing - Wall mount....118
Figure 78 : Compact casing - Pole mount using U-bolt....119
Figure 79 : Compact casing - rear view of the pole mounting using U-bolt (no pole represented)....119
Figure 80 : Compact casing - Pole mount using strapping....120
Figure 81 : Standard casing mounting kit dimensions....121
Figure 82 : Rear view of the standard casing with mounting kit....121
Figure 83 : Compact casing - Wall mount....122
Figure 84 : Standard casing - Pole mount using U-bolts....122

Figure 85 : Compact casing - rear view of the pole mounting using U-bolt (no pole represented) 123
Figure 86 : Standard casing - Pole mount using strapping 123
Figure 87 : Screws for indoor POE injectors mounting 124
Figure 88 : Screws for outdoor POE injectors mounting 124
Figure 89 : Mounting bracket for outdoor POE injectors 125
Figure 90 : Indoor Ethernet surge protection – DIN rail clip 125
Figure 91 : Outdoor Ethernet Surge protection – wall mounting 126
Figure 92 : Outdoor Ethernet Surge protection – pole mounting with strapping 126
Figure 93 : connection settings of the installation 128
Figure 94 : Standard casing – earthing with U bolt configuration 129
Figure 95 : Standard casing – earthing without U bolt configuration 129
Figure 96 : Compact casing – earthing with U bolt configuration 130
Figure 97 : Compact casing – earthing without U bolt configuration 130
Figure 98 : Earthing of the RF coaxial surge protection 131
Figure 99 : Earthing of the indoor Ethernet surge protection 132
Figure 100 : Earthing of the outdoor Ethernet surge protection 132
Figure 101 : Earthing of the outdoor PoE injector 133
Figure 102 : nominal configuration of N connectors - standard casing 134
Figure 103 : Recommended allocation of the N connectors – Standard casing 135
Figure 104 : Nominal configuration of N connectors - compact casing 136
Figure 105 : GNSS antenna cabling, internal and external 137
Figure 106 : LTE antenna cabling, internal and external 138
Figure 107 : GPS and LTE cabling within Wirnet iBTS Compact 139
Figure 108 : Connection of the RF coaxial cable 140
Figure 109 : attachment of the RF antenna coaxial cable 140
Figure 110 : Single LoRa module / single omnidirectional antenna connections 141
Figure 111 : Single LoRa module / dual omnidirectional antennas connections 141
Figure 112 : Single LoRa module / single dual polarization antenna connections 142
Figure 113 : Two LoRa modules / two omnidirectional antennas / diversity connections 142
Figure 114 : Two LoRa modules / two dual polarization antennas connections 143
Figure 115 : Three LoRa modules / three sectors antennas connections 143
Figure 116 : Three LoRa modules / three sectors antennas / dual polarization connections 144
Figure 117 : Four LoRa modules / single omnidirectional antenna connections 144
Figure 118 : Four LoRa modules / dual omnidirectional antennas / diversity connections 145
Figure 119 : Four LoRa modules / dual polarization antenna connections 145
Figure 120 : Ethernet connection on Wirnet iBTS side / cable gland 146
Figure 121 : Ethernet connection on Wirnet iBTS side 147
Figure 122 : Ethernet connection on PoE injector side 148
Figure 123 : Auxiliary DC power supply connector 149
Figure 124 : USIM Card 150
Figure 125 : Installation with recommended lighting protections 152
Figure 126 : Installation with recommended lighting protections / Outdoor PoE injector 154
Figure 127 : Wirma2 Debug tool connected to the Wirnet iBTS 158
Figure 128 : Serial port configuration 159
Figure 129 : USB connector of the Wirnet iBTS 159
Figure 130 : ON/OFF button of the Wirnet iBTS 160
Figure 131 : Local Ethernet interface of the Wirnet iBTS 161

REFERENCES

Reference	Document / link	Description
[1]	https://www.lora-alliance.org/For-Developers/LoRaWANDevelopers	LoRaWAN™ Specification V1.0.1 February 2016
[2]		E-CON-Product_Description_Wirnet_iBTS-V1.4.docx

GLOSSARY

Abbreviation	Description
ADC	Analog to Digital Converter
AES	Advanced Encryption Standard
AGC	Automatic Gain Control
AMR	Automatic Meter Reading
ANATEL	Agência NAcional de TELecomunicações (Brazilian agency of telecommunications)
AP	Access Point
APAC	Asia PACific
APC	Automated Power Control
API	Application Programming Interface
APN	Access Point Name
ARM	Advanced RISC Machine
BER	Bit error Rate
BLER	Block Error rate
BTS	Base Transceiver Station
BW	Band Width
CAN	Control Area Network
CDMA	Code Division Multiple Access
CMOS	Complementary Metal Oxide Semiconductor
CPU	Central Processing Unit
DAC	Digital to Analog Converter
DDR	Double Data Rate
DDRAM	Double Data Rate RAM
DHCP	Dynamic Host Configuration Protocol

DIN	Deutsches Institut für Normung (German Institute for Standardization)
DOTA	Download Over The Air
DSP	Digital Signal Processor
DVFS	Dynamic Voltage and Frequency Scaling
EDGE	Enhanced Data rates for GSM Evolution
EIRP	Equivalent Isotropically Radiated Power
EMC	ElectroMagnetic Compatibility
eMMC	Embedded Multi Media Card
FCC	Federal Communications Commission
FER	Frame Error Rate
FPGA	Field Programmable Gate Array
FTP	File Transfer Protocol
GNSS	Global Navigation Satellite System
GMSK	Gaussian Minimum Shift Keying
GPIO	General Purpose Input Output
GPRS	General Packet Radio Service
GPS	Global Positioning System
GSM	Global System for Mobile communication
HSPA	High Speed Packet Access
HTTP	HyperText Transfer Protocol
IC	Integrated Circuit or Industry Canada
IK	Mechanical Impact
IO	In / Out
IoT	Internet of Things
IP	Internet Protocol or Ingress Protection
IrDA	Infrared Data Association
ISM	Industrial Scientific and Medical
I2C	Inter Integrated Circuit
I2S	Inter IC Sound
KLK	KERLINK
KNET	KERLINK M2M network
LBT	Listen Before Talk
LDO	Low Drop Out
LED	Light-Emitting Diode
LNA	Low Noise Amplifier
LoRa	Long Range
LSZH	Low Smoke Zero Halogen
LTE	Long Term Evolution
LUT	Look Up table

LVDS	Low Voltage Differential Signaling
M2M	Machine to Machine
MIPS	Millions of Instructions Per Second
MFLOPS	Million FLoating-point Operations Per Second
NFS	Network File System
NMEA	National Marine Electronics Association
PA	Power Amplifier
PC	Personal Computer or Polycarbonate
PCB	Printed Circuit Board
PCI	Peripheral Component Interconnect
PER	Packet Error Rate
PLL	Phase Locked loop
PoE	Power over Ethernet
PU	Polyurethane
RAM	Random Access Memory
RF	Radio Frequency
RSSI	Received Signal Strength Indicator
RTC	Real Time Clock
RX	Receive
SAW	Surface Acoustic Wave
SDIO	Secure Digital Input Output
SI	Système d'Information
SIM	Subscriber Identity Module
SMA	SubMiniature version A
SMB	SubMiniature version B
SNR	Signal to Noise Ratio
SPDT	Single Pole Double Throw
SPI	Serial Peripheral Interface bus
SSH	Secure Shell
SSTP	Screened Shielded Twisted Pair
STP	Shielded Twisted Pair
TBD	To Be Defined
TCP	Transmission Control Protocol
TDOA	Time Difference On Arrival
TPE	ThermoPlastic Elastomer
TX	Transmit
UART	Universal Asynchronous Receiver Transmitter
UFL	Miniature coaxial RF connector manufactured by Hirose Electric Group
UICC	Universal Integrated Circuit Card

UMTS	Universal Mobile Telecommunications System
USB	Universal Serial Bus
USIM	Universal Subscriber Identity Module
UV	UltraViolet
VLIW	Very Long Instruction Word
WAN	Wide Area Network
WLAN	Wireless Local Area Network
VHF	Very High Frequency
3G	Third generation of mobile telecommunications technology
3GPP	3rd Generation Partnership Project
4G	Fourth generation of mobile telecommunications technology
8PSK	Eight Phase shift Keying

INTRODUCTION

The Wirnet iBTS station is part of the global Long Range Radio fixed network to provide M2M connectivity link between low power end-point and Internet Access.
The gateway architecture is specifically designed for the needs of public networks operators.

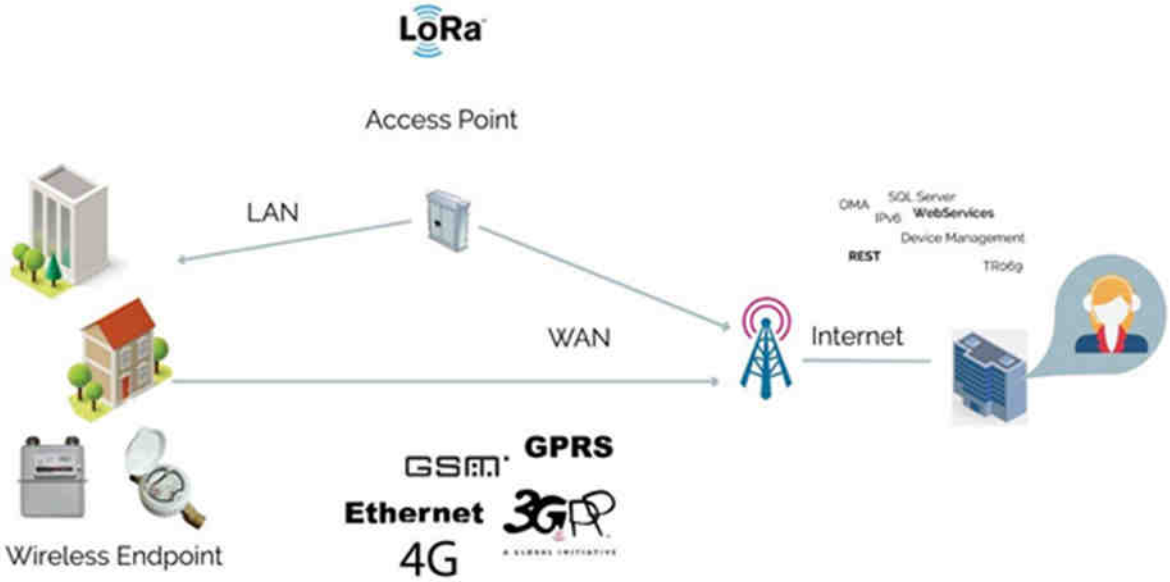

Figure 1: LoRa Network topology

The Wirnet iBTS is based on "Next Generation LoRa" technology provided by Semtech Company. It is compatible and interoperable with existing LoRa LPWAN and offers GPS-free geolocalization features.
Wirnet iBTS architecture is completely modular and upgradable to offer multiple configurations to cover different countries and areas around the world:

	Wirnet iBTS 868	Wirnet iBTS 915	Wirnet iBTS 923
geographical area	Europe, Russia Africa Middle East, India	North America Central America South America with the exception of Brazil	Asia : Indonesia, Malaysia, Korea, Japan, Taiwan, Hong Kong, Thailand, Vietnam, Papua New Guinea, Singapore, Philippines Oceania : Australia, New Zealand Brazil
ISM band	863 - 876 MHz	902 - 928 MHz	915 - 928 MHz
Downstream bandwidth (Tx of the LoRa IoT Station)	863 - 873MHz	902 - 928 MHz	920 - 928 MHz
Upstream bandwidth (Rx of the LoRa IoT Station)	863 - 873 MHz	902 - 928 MHz	915 - 928 MHz
WWAN capabilities	LTE 800/900/1800/2100/2600MHz HSPA 850/900/1900/2100 MHz GSM/GPRS/EDGE 850/900/1800/1900MHz	LTE 700/850/1700/1900MHz CDMA800/1900 HSPA 850/900/1700/1900/2100 MHz GSM/GPRS/EDGE 850/900/1800/1900MHz	LTE 800/900/1800/2100/2600MHz HSPA 850/900/1900/2100 MHz GSM/GPRS/EDGE 850/900/1800/1900MHz
Certifications	EN 300 220	FCC and IC CB scheme for : Mexico, Argentina, Chile, Bolivia, Colombia, Venezuela, Uruguay, Peru, Ecuador	FCC and EN 300 220 CB scheme for : for Japan, Korea, Australia, Singapore, Indonesia, New-Zealand, Brazil
filters for installation in already existing telco-area	Able to coexist with GSM 850/900/1800/1900 and HSPA-LTE 800/900/1800/1900/2100/2600 Usage in India requires a specific cavity filtre for coexistance with CDMA800	Able to coexist with GSM 850/1900, CDMA800/1900 & HSPA-LTE 700/850/1700/1900 Not able to share the same installation site with GSM900/HSPA900/LTE900 (if necessary, use a specific cavity filter)	Able to coexist with GSM850/900/1800/1900 and HSPA-LTE 850/900/1800/1900/2100 To use in Singapore and coexist with EGSM900 you need to add a specific cavity filter.

Please check the appropriate version for the dedicated country. Contact KERLINK if required.

The present document addresses all the above Wirnet iBTS versions.

1. Description of the Wirnet iBTS

1.1 Modular architecture

The Wirnet iBTS has a modular architecture allowing the operator to configure and upgrade the gateway to fulfill its needs.
Thanks to the modularity the operator is able to choose:

- The backhaul network: Ethernet or GPRS/EDGE/HSPA/CDMA/LTE
- The unlicensed band (ISM) where to operate the LoRa LPWAN: 868MHz, 902-928MHz or 915-928MHz
- The number of channels to operate the LoRa LPWAN: 8 to 64
- The antenna interface: single (omnidirectional), dual (space diversity or dual polarization) or tri (sectorization)

Four different modules can be integrated in the Wirnet iBTS:

- CPU Module, which includes the main following features:
  - Power management of the Wirnet iBTS
  - CPU
  - Memories
  - GNSS receiver (GPS)
- WAN Module, which provides the backhaul functionality:
  - Backup battery
  - 4G modem declined in 3 versions depending on the geographical area:
    - Europe
    - Americas
    - APAC
- LoRa module – LoRa LOC, which can be also derived in 3 versions :
  - 868MHz (863-873MHz)
  - 915MHz (902-928MHz)
  - 923MHz (915-928MHz)

The Wirnet iBTS can integrate from one to four « LoRa modules ». In this particular “4 LoRa modules” configuration, a specific “front-end” board and mechanical lid are used to combine the four “LoRa modules” together (see §1.4.3 for further details).
In its maximum size configuration, the Wirnet iBTS can then integrate six modules: one “CPU module”, one “WAN module” and four “LoRa modules”.

The Figure 2 below shows an external view of the Wirnet iBTS:

Figure 2: Wirnet iBTS external view

The Figure 3 below shows an internal view of the Wirnet iBTS, featuring three “LoRa modules”, one “CPU module” and one “WAN module”:

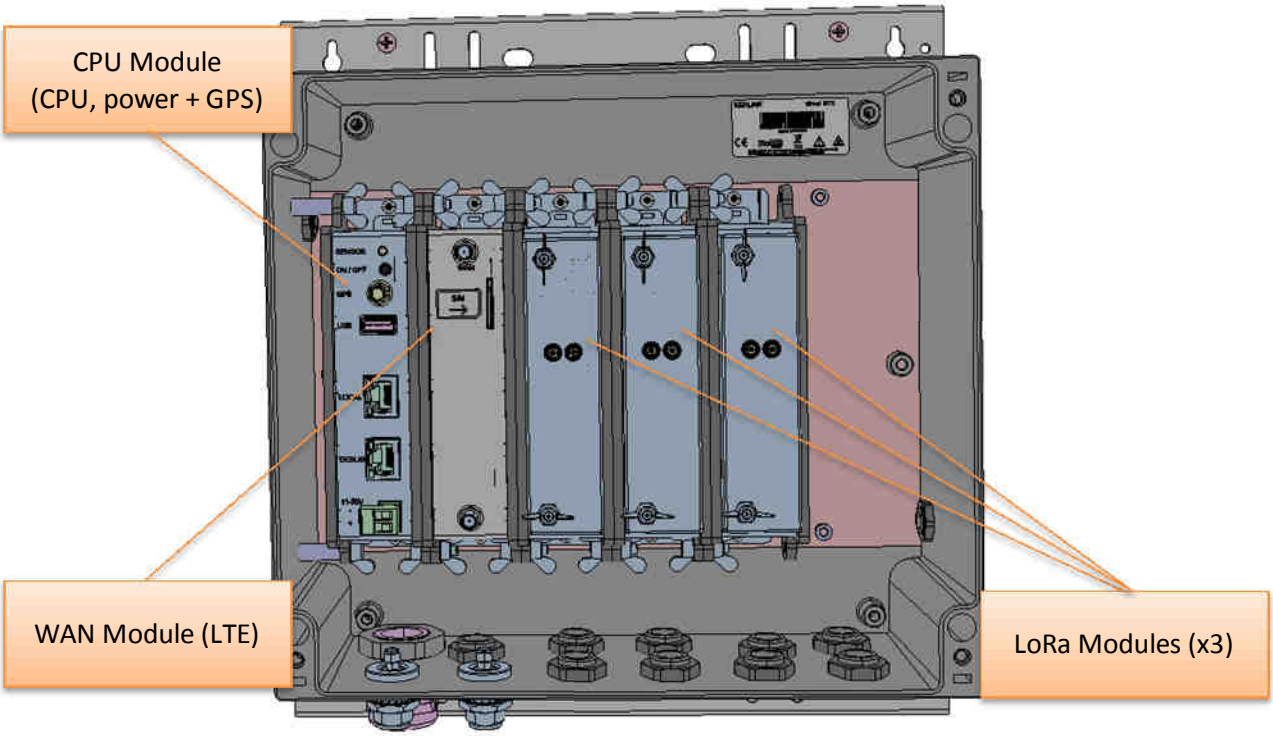

Figure 3: Wirnet iBTS internal view

As part of the Wirnet iBTS modularity, many accessories can be provided for configuration purpose:

- GNSS antennas
- LTE antennas
- LoRa antennas
- RF cavity filters
- PoE injectors
- Surge protections

The full list of accessories is detailed in §1.7 and §6.

1.2 Mechanical implementation for standard casing

1.2.1 Standard casing

The Wirnet iBTS station is built on a robust IP66 aluminum enclosure of 280 x 250 x 120 mm. It is composed of two separated parts: the frame and a lid. The lid tightens to the frame trough M5 screws, hidden by two plastic clip-on design covers.

A mounting kit is screwed on the back of the enclosure, allowing several mounting configurations: wall mount, pole mount and metallic strapping.

The left and right sides of the enclosure integrate two waterproof screw-in vents to equalize the pressure inside and outside. This reduces condensation by allowing air to flow freely into and out of the sealed enclosure. At the same time, they provide a durable barrier to protect the internal modules from contaminants like dust, sand, water, etc … improving reliability, safety and longer product life.

The bottom side of the enclosure is dedicated for the connectors:

- 1 x M25 cable gland used to introduce the Ethernet cable (PoE) inside the enclosure
- 3 x N-SMB adapters used as RF interfaces for the antennas:
  - 1 for GNSS antenna (GPS)
  - 1 for WAN antenna (GSM/HSDPA/LTE)
  - 1 for LoRa antenna. The number of LoRa antenna interfaces can be extended to 6.
- 8 x M16 blind stops. They are considered as provisions for N-SMB connectors to be used for additional antennas (LoRa or WAN) or external power supply cable gland.

Blind threaded standoffs are inserted in the rear side the enclosure. They are used to screw and maintain the modules inside the enclosure. The modules can be easily inserted and extracted for maintenance and upgradability purposes.

The Figure 4 below shows the different components inside the enclosure.

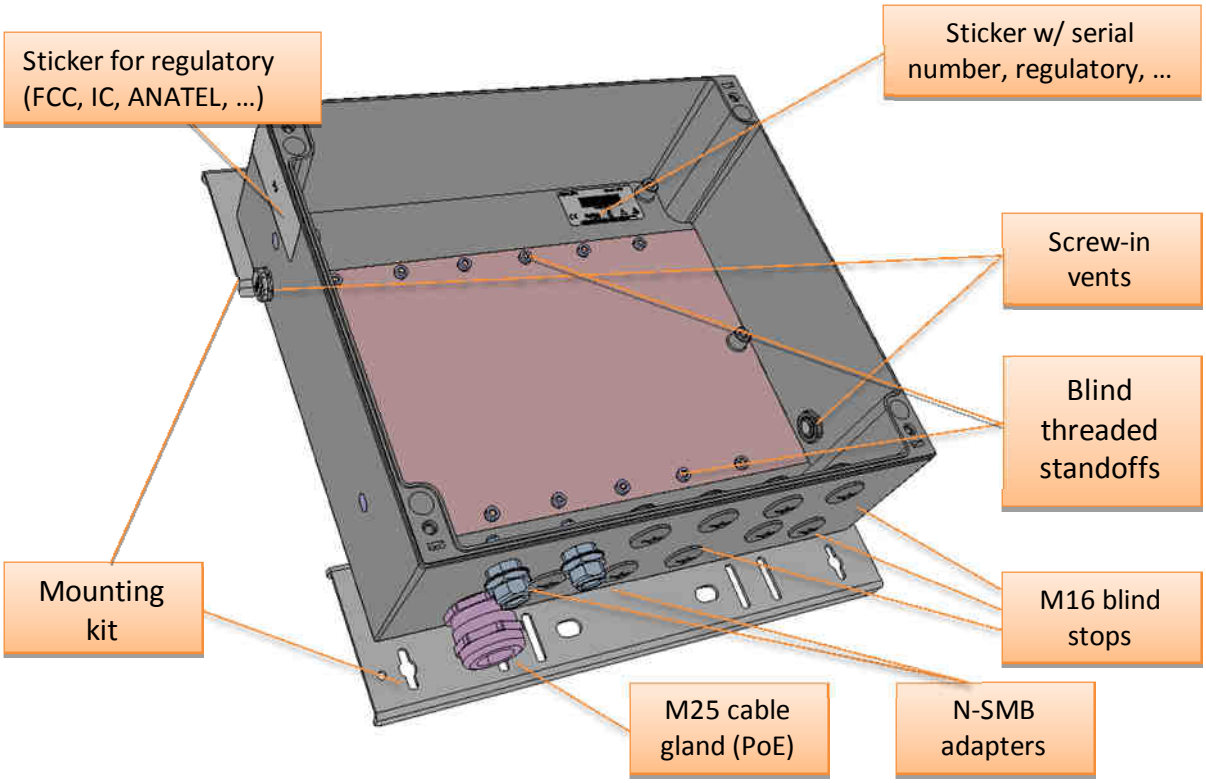

Figure 4: Enclosure internal view

The main characteristics of the enclosure are detailed hereafter:

Description	Specification
Enclosure material	Aluminum
Gasket material	TPE
Mounting kit material	Stainless steel
Color	RAL 9010
Dimensions with connectors	300 x 280 x 120 mm
Dimensions with connectors + mounting kit	300 x 320 x 125 mm
Weight – no modules	5.4 Kg
Weight – 3 modules configuration	7.2 Kg
Ingress protection	IP66 / EN 60529
Humidity	95% non-condensing
Impact resistance	IK08
Flammability rating	UL94-V0
Number of pressure equalizer	2
Enclosure temperature range	-40°C to +120°C
Wirnet iBTS operating temperature range	-20°C to +55°C
Connectors	1 x M25 cable gland (PoE) 3 x N-SMB adapters (extension to 11 max) 8 x M16 blind stops (provisions for N-SMB or cable gland)

The modules are screwed on the blind threaded standoffs to build the Wirnet iBTS according to customer requirements.
The modules are tightened all together with two mechanisms:

- the back panel board connectors,
- the wing screws assembling the mechanical sides (radiators) of the modules

SMB-SMB cables are provided to interconnect the RF interfaces of the modules to the SMB-N adapters, on the bottom side of the enclosure.

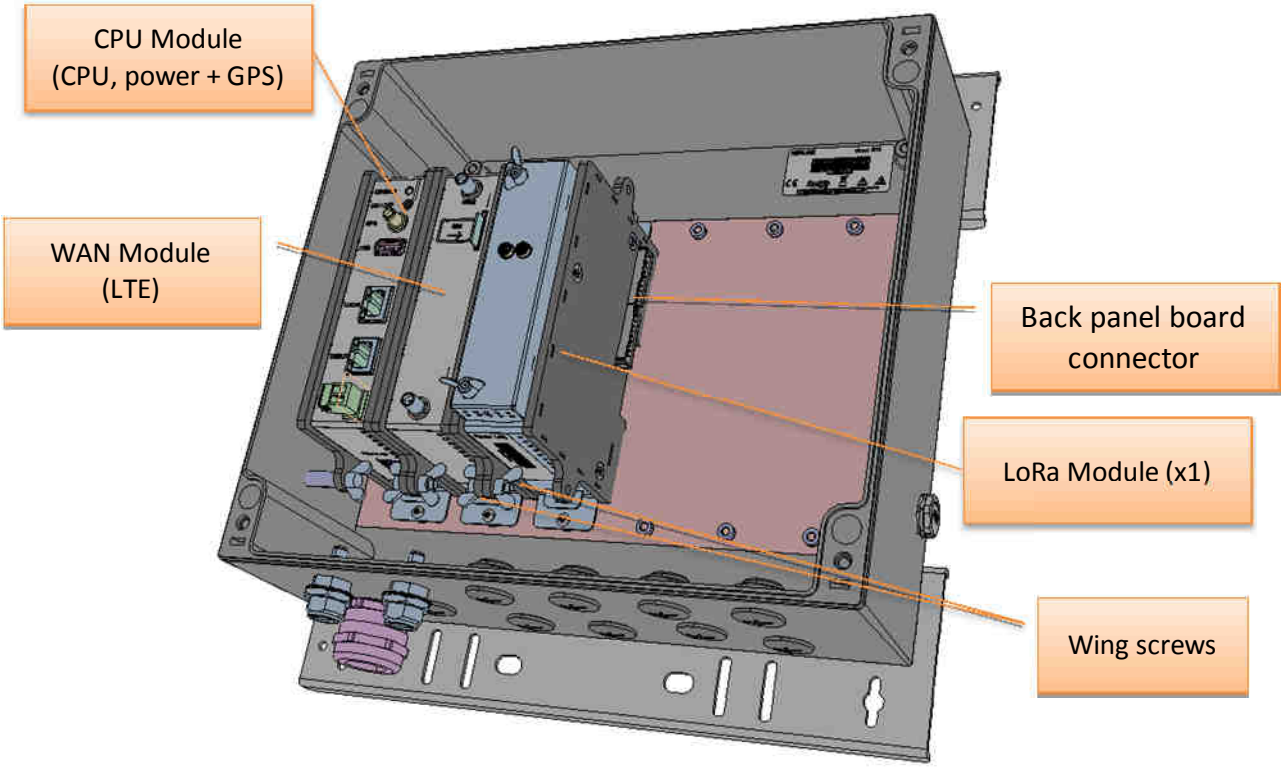

Figure 5: Insertion of the modules inside the enclosure

1.2.2 Stickers

The Wirnet iBTS has two stickers placed inside and outside the casing:

- A sticker on the rear of the Wirnet iBTS enclosure including serial number, regulatory markings and electrical information.
- A sticker outside the enclosure including regulatory marking, logo and sentences depending on the countries (FCC, IC, ANATEL, etc …).

The placement of the stickers is described on Figure 4.

1.3 Mechanical implementation for compact casing

1.3.1 Compact casing

The Wirnet iBTS Compact station is built on a high impact resistant IP67 polycarbonate wall mounting cabinet that withstands harsh industrial and outdoor environments.
It offers excellent flammability rating, good UV resistance and also good chemical resistance.
The dimensions of the cabinet are 260 mm x 170 mm x 120 mm.
It is composed of two separated parts: the frame and a lid. The lid tightens to the frame trough two hinges that can be opened or closed by simple clipping. No screws are required but only optional.

A mounting kit, with embedded antenna brackets, is screwed on the back of the enclosure, allowing several mounting configurations: wall mount, pole mount and metallic strapping.

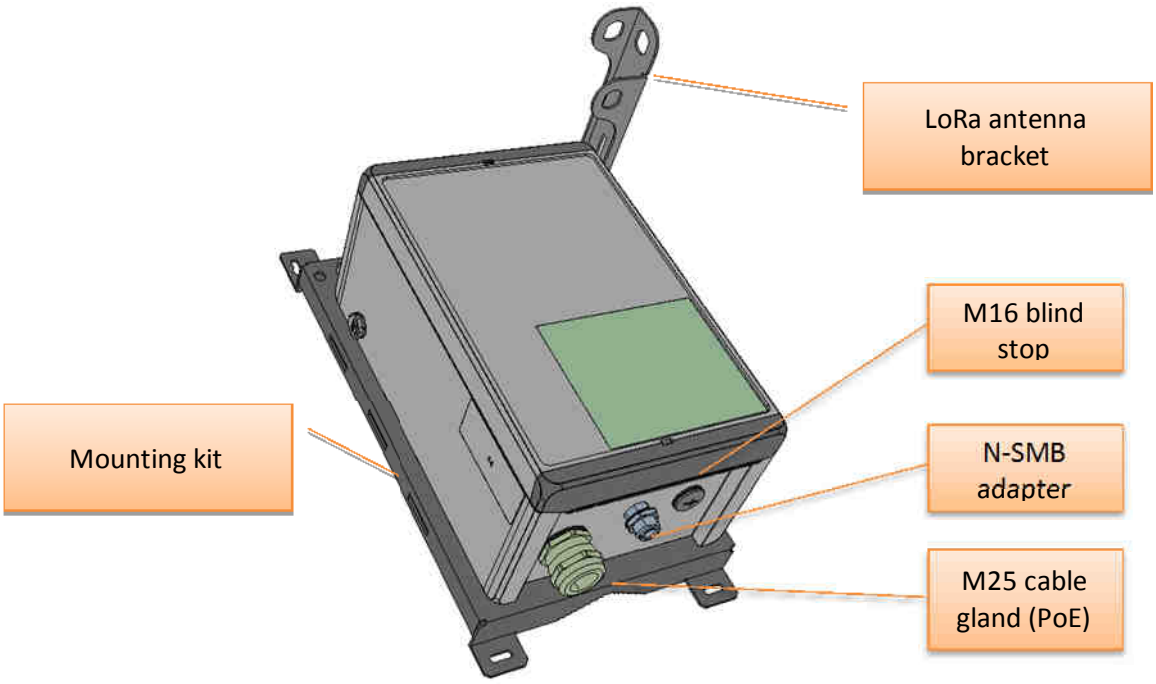

Figure 6: Wirnet iBTS Compact external view

The left and right sides of the enclosure integrate two waterproof screw-in vents to equalize the pressure inside and outside. This reduces condensation by allowing air to flow freely into and out of the sealed enclosure. At the same time, they provide a durable barrier to protect the internal modules from contaminants like dust, sand, water, etc … improving reliability, safety and longer product life.

The bottom side of the enclosure is dedicated for the connectors:

- 1 x M25 cable gland used to introduce the Ethernet cable (PoE) inside the enclosure
- 1 x N-SMB adapters used as RF interfaces for LoRa antenna. The number of LoRa antenna interfaces can be extended to two.

- 1 x M16 blind stop. It is considered as provision for an N-SMB connector to be used for additional LoRa antenna or external power supply cable gland.

An internal metal plate features a GNSS/LTE antenna bracket. An internal GNSS/LTE magnetic mount antenna is placed on this bracket.
Blind threaded standoffs are inserted in the rear side the enclosure. They are used to screw and maintain the modules inside the enclosure. The modules can be easily inserted and extracted for maintenance and upgradability purposes.

The Figure 7 below shows the different components inside the enclosure.

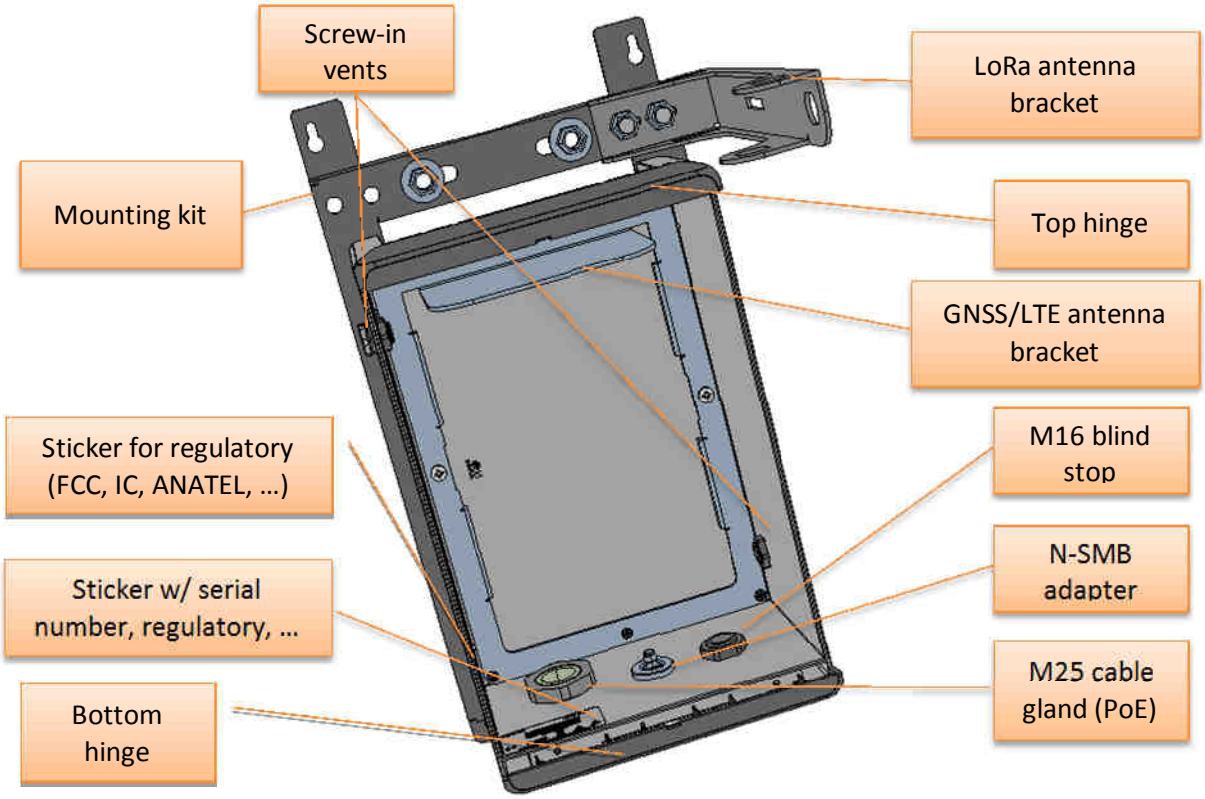

Figure 7 : Wirnet iBTS Compact internal view

The main characteristics of the cabinet are detailed hereafter:

Description	Specification
Enclosure material	Polycarbonate (PC)
Gasket material	Polyurethane (PU)
Mounting kit material	Stainless steel
Color	RAL 7035
Dimensions with connectors	280 x 170 x 120 mm
Dimensions with connectors + mounting kit	360 x 190 x 150 mm

Weight – 3 modules configuration	3 Kg
Ingress protection	IP66 / EN 60529
Humidity	95% non-condensing
Impact resistance	IK08
Flammability rating	UL94-V0
Number of pressure equalizer	2
Cabinet temperature range	-40°C to +105°C
Wirnet iBTS operating temperature range	-20°C to +55°C
Connectors	1 x M25 cable gland (PoE) 1 x N-SMB adapters (extension to 2 max) 1 x M16 blind stops (provision for N-SMB or cable gland)

The modules are screwed on the blind threaded standoffs to build the Wirnet iBTS Compact according to customer requirements.
The Wirnet iBTS Compact can embed up to 3 modules.
The modules are tightened all together with two mechanisms:

- the back panel board connectors,
- the wing screws assembling the mechanical sides (radiators) of the modules

SMB-SMB cables are provided to interconnect the RF interfaces of the modules to the SMB-N adapters, on the bottom side of the enclosure.

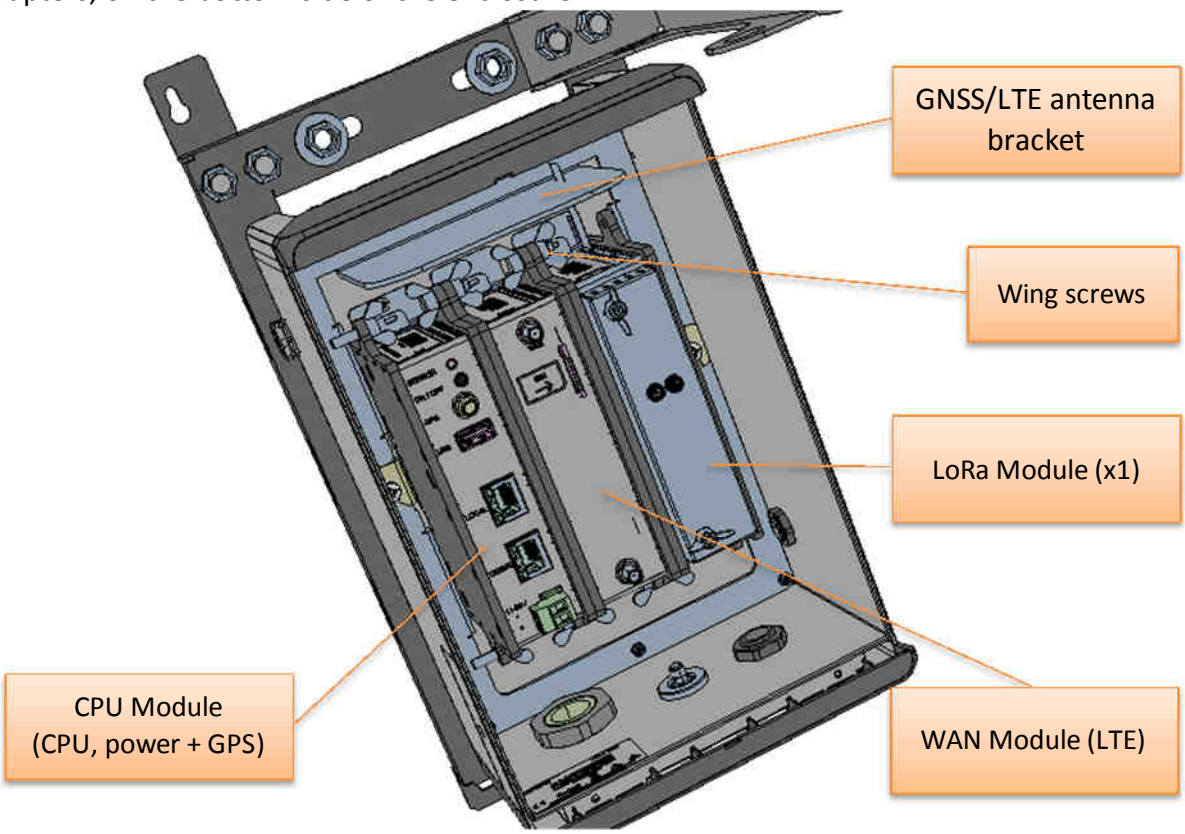

Figure 8: Insertion of the modules inside the cabinet

1.3.2 Stickers

The Wirnet iBTS Compact has two stickers placed inside and outside the casing:

- A sticker on the bottom of the Wirnet iBTS Compact cabinet including serial number, regulatory markings and electrical information.
- A sticker outside the cabinet including regulatory marking, logo and sentences depending on the countries (FCC, IC, ANATEL, etc …).

The placement of the stickers is described on Figure 7.

1.4 Block Diagram

1.4.1 Common functionalities

The following figure describes the hardware architecture and basic principles that are common to the many Wirnet iBTS versions. In this particular case, we consider a configuration with one “CPU module”, one “WAN module” and one “LoRa Module”.

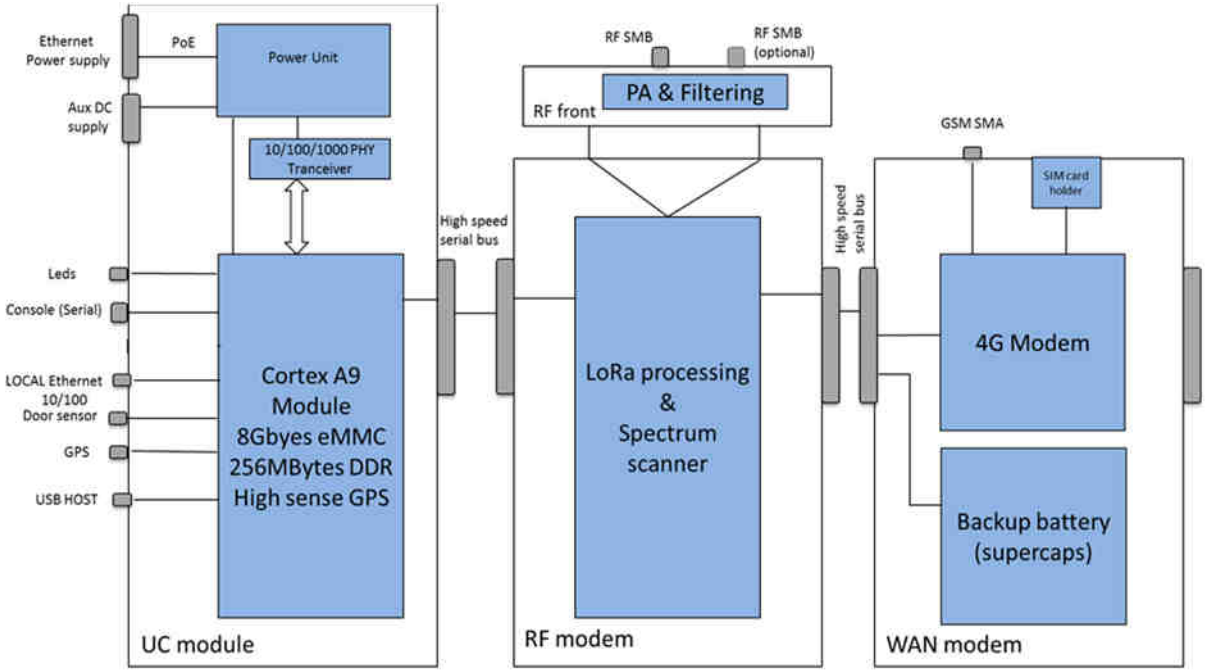

Figure 9: Common Wirnet iBTS block diagram

The Wirnet iBTS is power supplied by a PoE injector through the RJ45 cable.
The RJ45 cable is introduced into the enclosure through the M25 cable gland and connected to the RJ45 connector of the CPU module.
An alternate option of power supply consists in using an auxiliary power supply (11V-55V DC) and connects it to the Euroblock connector of the CPU module.

The CPU Module insures the main followings features:

- Power management unit
- Cortex A9 CPU
- Memories (8GB eMMC and 256Mb DDR)
- GNSS receiver (GPS) with one RF SMA connector to connect the GNSS antenna

The CPU module is connected to the other modules through a back panel board allowing, the management of all the modules inside the Wirnet iBTS.

The “WAN Module” provides the backhaul functionality. It includes:

- Backup battery
- A 4G Mini PCI Express module that can be declined in 2 versions depending on the geographical area:
  - Europe and APAC
  - Americas
- The USIM card holder
- A RF SMB connector to connect a LTE antenna
- A 868MHz or 915MHz notch filter to avoid desensitization of the LoRa receivers

The “LoRa modules” can be derived in 3 bands versions to address different countries:

- 868MHz (863-873MHz)
- 915MHz (902-928MHz)
- 923MHz (915-928MHz)

The RF front-end board is configured to support a single antenna (16 channels) or two antennas (2x8 channels).

1.4.2 Standard version of Wirnet iBTS

The following figure describes the functional architecture for the standard Wirnet iBTS version i.e. including from one to three "LoRa Modules":

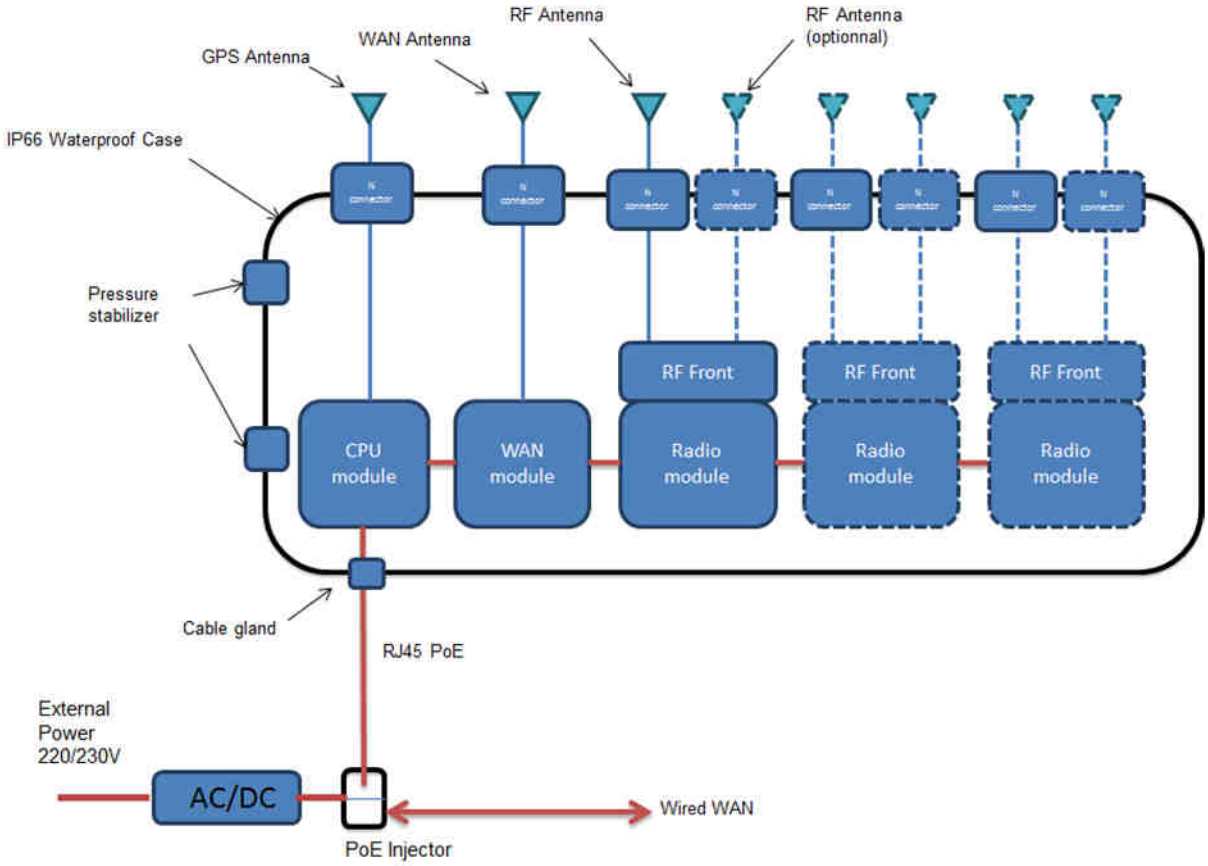

Figure 10: Standard Wirnet iBTS block diagram

The RF front-end board of the "Lora modules" can be derived in 3 bands versions to address different countries:

- 868MHz (863-873MHz)
- 915MHz (902-928MHz)
- 923MHz (915-928MHz)

The RF front-end board is configured to support a single antenna (16 channels) or two antennas (2x8 channels). This could lead then to a "six LoRa antennas" configurations in the maximum use case (tri-sectors, dual polarization antenna for instance).

The GPS (GNSS) connector, the WAN (LTE) connector and LoRa connectors are available on the bottom side of the enclosure. All antennas are external antennas.

1.4.3 "Four Lora Modules" version of Wirnet iBTS

The following figure describes the functional architecture for a "4 LoRa modules" version, featuring a maximum of 64 channels.

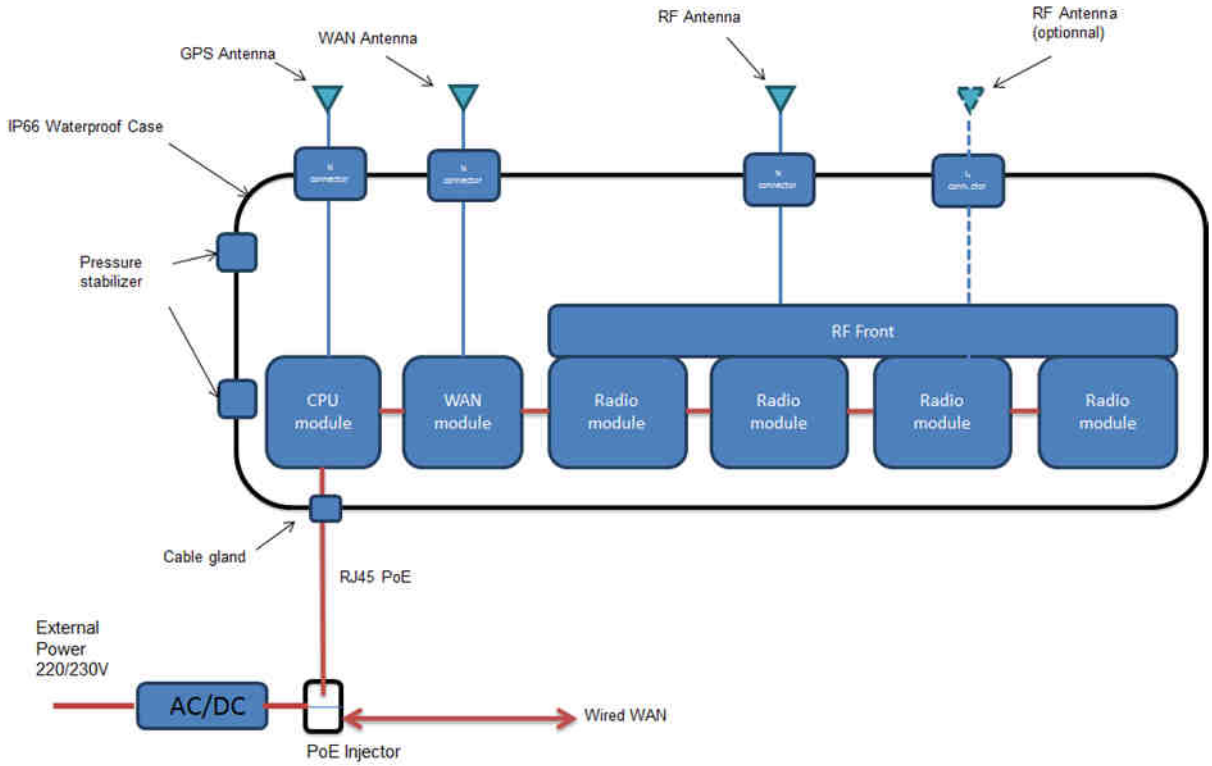

Figure 11: Wirnet iBTS "4 LoRa modules" block diagram

In this particular configuration, the mechanical front-end lids and front-end boards of each individual "LoRa Module" are removed. They are replaced by a bigger RF front end board and front-end lid that combine the 4 LoRa modules together.
This bigger RF front-end board can be derived in 2 bands versions to address different countries:

- 915MHz (902-928MHz)
- 923MHz (915-928MHz)

The 868MHz band is not available in this configuration.
The bigger RF front-end board is configured to support a single antenna (64 channels) or two antennas (2x32 channels).

The GPS (GNSS) connector, the WAN (LTE) connector and LoRa connectors are available on the bottom side of the enclosure. The antennas are all external antennas.

1.4.4 Compact version of Wirnet iBTS

The following figure describes the functional architecture of the Wirnet iBTS Compact:

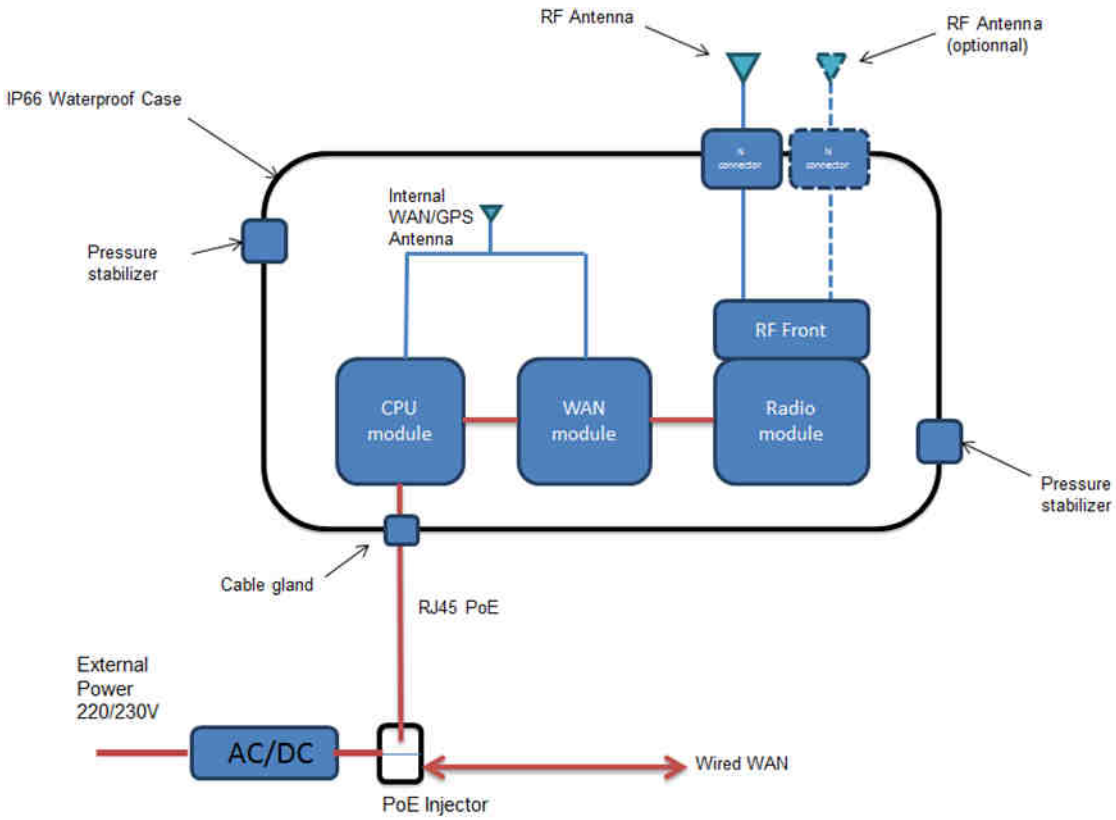

Figure 12: Wirnet iBTS Compact block diagram

The RF front-end board of the "Lora modules" can be derived in 3 bands versions to address different countries:

- 868MHz (863-873MHz)
- 915MHz (902-928MHz)
- 923MHz (915-928MHz)

The RF front-end board is configured to support a single antenna (16 channels) or two antennas (2x8 channels).

The Wirnet iBTS Compact embeds an internal GPS (GNSS) / WAN (LTE) combo antenna compared to external antenna for standard enclosure.

The LoRa connectors are available on the bottom side of the enclosure. The LoRa antennas are external antennas.

1.5 Power consumption

The maximum power consumption of each individual module is detailed hereafter:

Module	Power consumption
CPU module (20% load)	1.8W max
WAN module (HSPA, 25% Tx, 75% Rx)	1.7W max
LoRa LOC module (Rx mode)	6.5W max

The maximum power consumption per day of the Wirnet iBTS is then the following:

Wirnet iBTS	Power consumption
Wirnet iBTS Compact (1 LoRa LOC Module)	237Wh max
Wirnet iBTS with 2 x LoRa LOC Modules	392Wh max
Wirnet iBTS with 3 x LoRa LOC Modules	547Wh max
Wirnet iBTS with 4 x LoRa LOC Modules	702Wh max

Note: the power supply of the Wirnet iBTS must be a limited power source.

1.6 Description of the modules

1.6.1 CPU module

1.6.1.1 Mechanical description

The CPU module is composed of four main mechanical parts:

- A “three-sides” flange including:
  - the connectors and interfaces placement
  - venting of internal boards through many holes
- A rear plate with DIN rail clipping points and spring
- Two radiators used as right and left side flanges

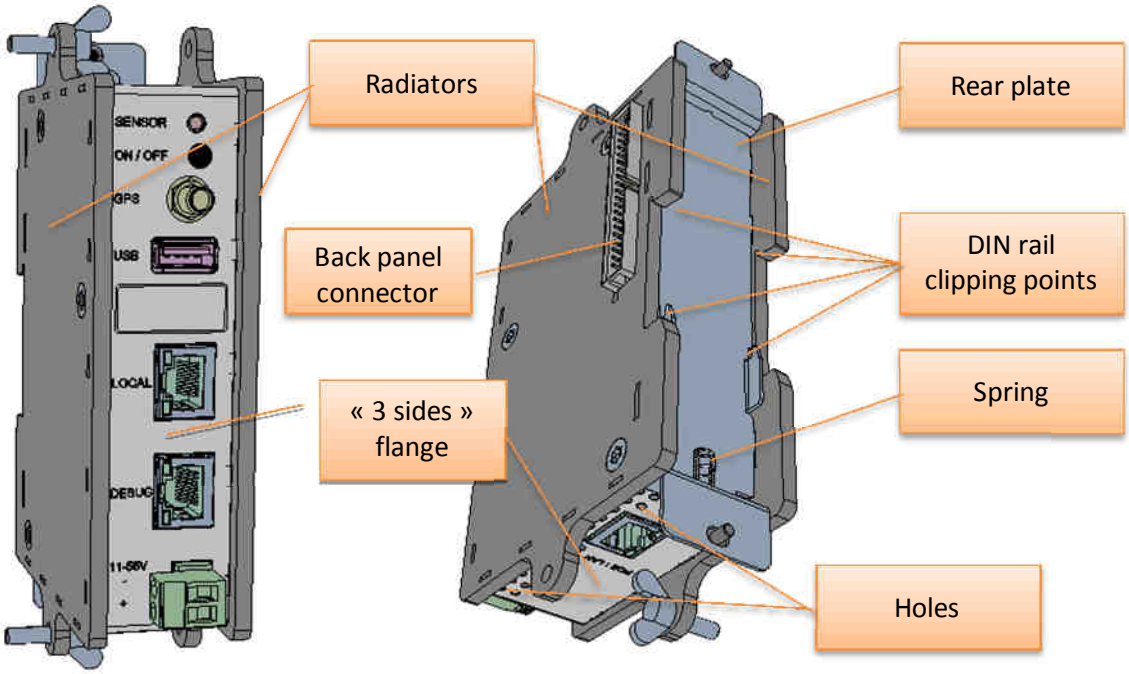

Figure 13: Mechanical description of the CPU module

The main mechanical characteristics of the CPU module are detailed hereafter:

Description	Specification
Radiators material	Aluminum
Other flanges material	Galvanized Steel
Dimensions	156 mm x 88 mm x 38 mm
Weight	500 g
Ingress protection	IP30

1.6.1.2 Connectors and user interfaces

The CPU module includes the following user interfaces and connectors:

Module side	Connector / interface	Description
Front side	Sensor	Light sensor to detect aperture of the enclosure
Front side	ON/OFF button	Press this button to power ON and power OFF the CPU module and therefore the Wirnet iBTS
Front side	GPS SMA RF connector	GPS input signal to be connected to the GPS antenna (internal or external)
Front side	USB type A connector	Used for firmware upgrade with a USB stick
Front side	RJ45 Local connector	Local Ethernet connection – interface to portable PC
Front side	RJ45 Debug connector	Serial debug interface – use debug tool described in §1.7.8
Front side	11-56V Euroblock connector	Auxiliary power supply. Polarity indicated on the front panel
Right side	Back panel HE10 40 contacts connector	Distributes the power supplies and high speed serial bus to other modules
Bottom side	RJ45 PoE connector	Ethernet + powers supply coming from PoE injector and introduced in the enclosure through the M25 cable gland

The three RJ45 connectors (PoE, LOCAL and debug) integrates 2 LEDs, one green and one orange. The behavior of the LEDs is detailed hereafter:

Connector	LED	Description
LOCAL	Green	Ethernet data activity
LOCAL	Orange	Ethernet Link
PoE/LAN	Green	Ethernet data activity
PoE/LAN	Orange	Ethernet Link
DEBUG	Green	Power status
DEBUG	Orange	Software status/ activity

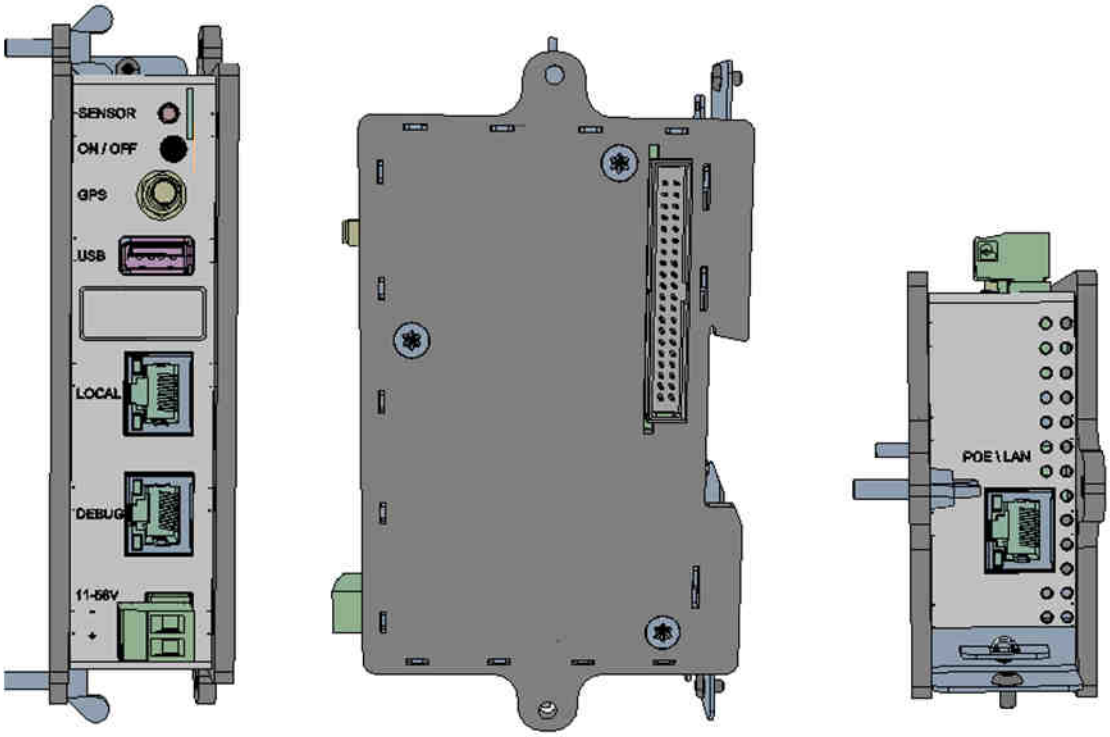

Figure 14: Connectors and user interfaces of the CPU module

Note: The debug interface is intended to be used by authorized and qualified personnel only. Only specific equipment developed by KERLINK must be connected to this interface (see §1.7.8.)

1.6.1.3 CPU module characteristics

The CPU module includes the following features:

Feature	Description
Processor	ARM Cortex A9, 800MHz core
Memories	256MB DDRAM – Volatile memory
	8GB eMMC– Non-volatile memory
Watchdog	Hardware type
Security	Secure core Information encryption Secure Boot Secure software download
RTC	RTC clock saved by back-up battery
GPS	Integrated high sensitivity GNSS module GPS L1C/A, GLONASS L1OF, BeiDou B1, QZSS L1C/A, SBAS L1C/A and Galileo E1B/C ready

	NMEA 0183, version 4.0
	Time pulse (PPS) accuracy < 20ns for LoRa geolocalization
Power	PoE controller 48V IEEE 802.3af/at
	LTPoE
	Auxiliary 11-56 VDC
	Backup-battery for RTC saving
	Integrated power management unit in CPU
Ethernet	10/100/1000 Base-T
	PoE IEEE802.3af/at and LTPoE++
	IEEE1588 version 2 time stamping compatible
	Automatic polarity correction
	1 x RJ45 WAN/POE
	1 x RJ45 LOCAL, interface to Portable PC
PLL	High performance, low jitter PLL
	PTP, IEEE1588 capabilities
	GPS PPS used as reference clock
	Free-run and holdover modes
USB	USB HS type A Slave
DEBUG	UART interface
	Debug tool to be used for UART to USB adaptation
Sensors	Light sensor to detect aperture of the enclose
	Pressure sensor
	Temperature sensor
Auto test	Internal power supplies check
	Interfaces and peripherals check
User interface	LED used for diagnostic (see §1.6.1.2)
	ON/OFF button
Operating temperature range	-20°C to +85°C
Current drain @48V	12mA in Power OFF mode (required to maintain PoE supply)
	35mA @ 20% load CPU + Ethernet Gbits (PoE)
	43mA @ 20% load CPU + Ethernet Gbits (PoE) + Local Ethernet

1.6.2 WAN module

1.6.2.1 Mechanical description

The WAN module is composed of four main mechanical parts:

- A “three-sides” flange including:
  - the connectors and interfaces placement
  - venting of internal boards through many holes
- A rear plate with DIN rail clipping points and spring
- Two radiators used as right and left side flanges

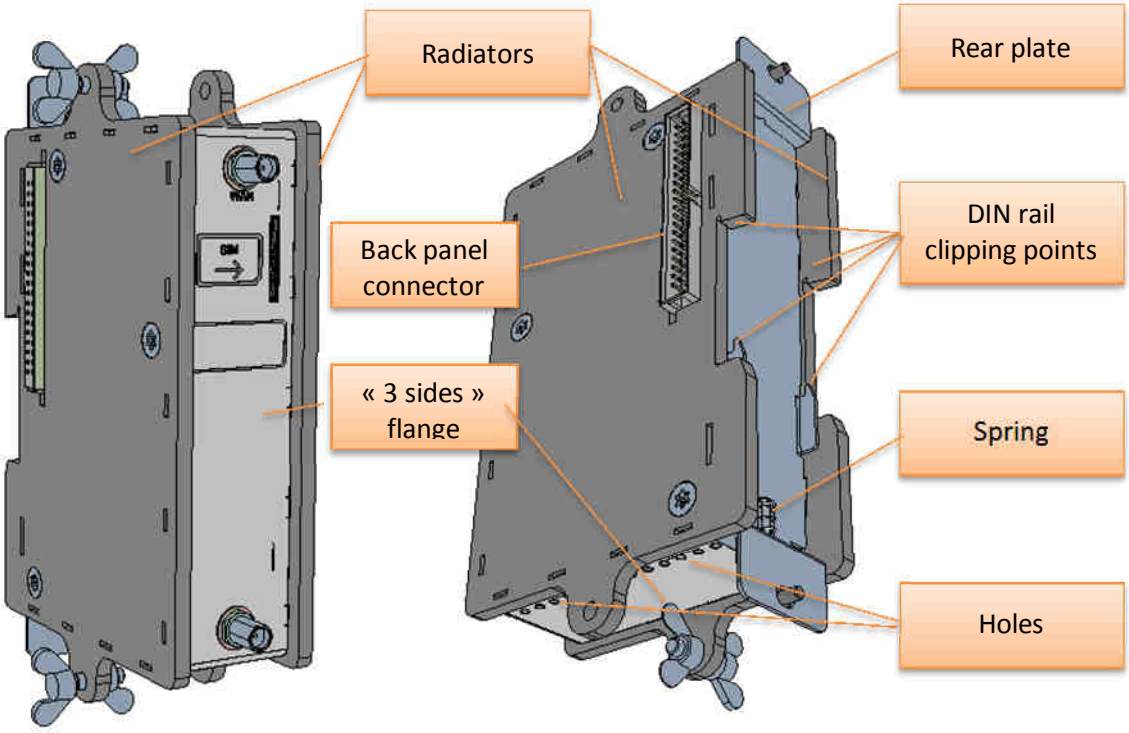

Figure 15: Mechanical description of the WAN module

The main mechanical characteristics of the WAN module are detailed hereafter:

Description	Specification
Radiators material	Aluminum
Other flanges material	Galvanized Steel
Dimensions	156 mm x 88 mm x 38 mm
Weight	500 g
Ingress protection	IP30

1.6.2.1 Connectors and user interfaces

The WAN module includes the following user interfaces and connectors:

Module side	Connector / interface	Description
Front side	WAN RF connector	WAN 4G RF signal to be connected to the LTE antenna (internal or external)
Front side	USIM connector	Push-push connector Insert USIM according to the besides picture
Right side	Back panel HE10 male 40 contacts connector	Transmit the power supplies and high speed serial bus to the next module
Left side	Back panel HE10 female 40 contacts connector	Receive the power supplies and high speed serial bus from the previous module

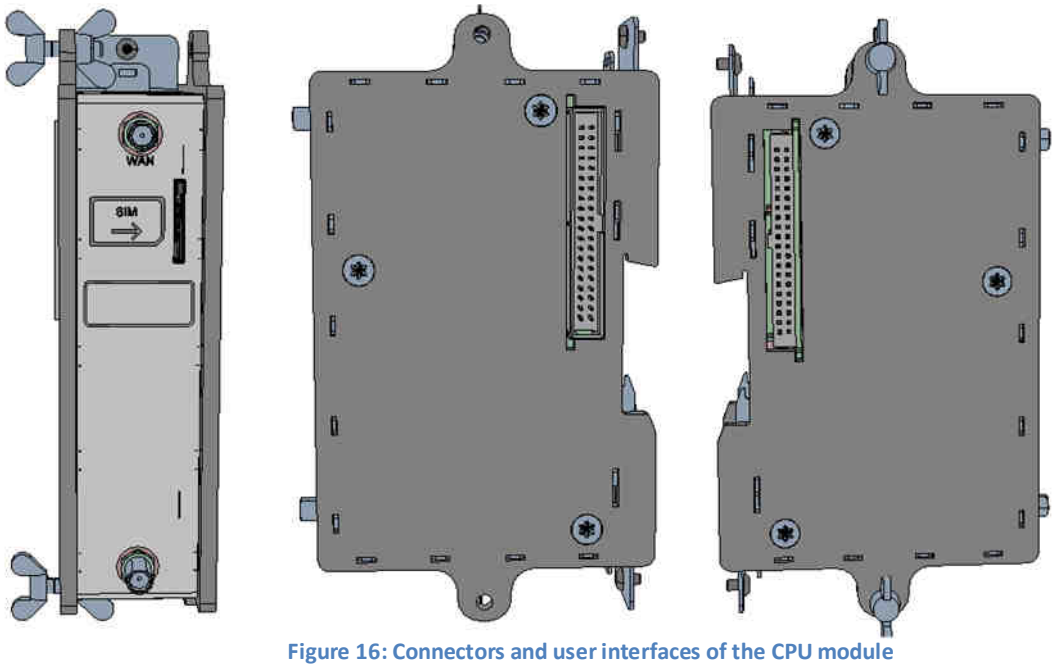

Figure 16: Connectors and user interfaces of the CPU module

Note: UFL to SMA coaxial cables are used to connect the Mini PCI Express card to the antennas.

1.6.2.2 WAN module characteristics

The WAN module supports the following features:

Feature	Description
Mini PCI Express Interface	USB only (no PCI Express interface available)
	Full Mini Card form factor (F1, F2)
	2 versions available (see § 1.6.2.3)
Backup battery	5 x 25F/2.7V supercapacitors
	15 minutes charging time
	Up to one minute capacity to ensure safe power down of the Wirnet iBTS
Operating temperature range	-20°C to +85°C
Current drain @48V	21mA HSPA Rx (attached)
	72mA HSPA Tx@Pout max

1.6.2.3 Supported bands

The WAN module embeds a Mini PCI express board is a LTE modem that can be provided in 2 versions:

- One for Europe and APAC
- One for Americas

1.6.2.3.1 LTE - Europe and APAC Mini PCI Express card

The first 4G Mini PCI Express card is dedicated to the European and APAC markets.
This module is already GCF approved and meets the Radio Equipment and Telecommunications Terminal Equipment (R&TTE) Directive of the European Union.

The bands and data rate supported by the module are the following:

Technology	Band	Data rate
LTE **3GPP Release 9**	Band 1 (2100MHz) Band 3 (1800MHz) Band 7 (2600MHz) Band 8 (900MHz) Band 20 (800MHz)	Category 3 • Downlink: o 100Mbps (20MHz BW) o 50Mbps (10MHz BW) • Uplink: o 50Mbps (20MHz BW) o 25Mbps (10MHz BW)
UMTS **HSPA** **3GPP Release 8**	Band 1 (2100MHz) Band 2 (1900MHz) Band 5 (850MHz) Band 8 (900MHz)	HSPA+ rates: • Downlink: up to 42Mbps (category 24) • Uplink: up to 5.76Mbps (category 6)

GSM **GPRS** **EDGE** **3GPP Release 99**	GSM 850 (850MHz) EGSM 900 (900MHz) DCS 1800 (1800MHz) PCS 1900 (1900MHz)	GPRS Multislot class 10 GPRS Multislot class 12 CS1 to CS4 MCS1 to MCS9 EDGE throughput up to 236kbps

1.6.2.3.1 LTE - Americas Mini PCI Express card

The next 4G Mini PCI Express card is dedicated to the American market.
This module is already PTCRB and CDG2 approved.
It is also FCC and IC certified:

- FCC ID: N7NMC7355
- IC ID: 2417C-MC7355

The bands and data rate supported by the module are the following:

Technology	Band	Data rate
LTE **3GPP Release 9**	Band 2 (1900MHz) Band 4 (1700/2100MHz) Band 5 (850MHz) Band 13 (700MHz) Band 17 (700MHz) Band 25 (1900MHz)	Category 3 • Downlink: o 100Mbps (20MHz BW) o 50Mbps (10MHz BW) • Uplink: o 50Mbps (20MHz BW) o 25Mbps (10MHz BW)
CDMA **EVDO release 0** **EVDO release A**	BC0 (800MHz) BC1 (1900MHz) BC10 (800MHz)	CDMA IS-856 (1xEV-DO Release A) • Up to 3.1 Mbps forward channel • Up to 1.8 Mbps reverse channel CDMA IS-2000 • Up to 153 kbps, simultaneous forward and reverse channel Circuit-switched data bearers up to 14.4 kbps
UMTS **HSPA** **3GPP Release 8**	Band 1 (2100MHz) Band 2 (1900MHz) Band 4 (1700/2100MHz) Band 5 (850MHz) Band 8 (900MHz)	HSPA+ rates: • Downlink: up to 42Mbps (category 24) • Uplink: up to 5.76Mbps (category 6)
GSM **GPRS** **EDGE** **3GPP Release 99**	GSM 850 (850MHz) EGSM 900 (900MHz) DCS 1800 (1800MHz) PCS 1900 (1900MHz)	GPRS Multislot class 10 GPRS Multislot class 12 CS1 to CS4 MCS1 to MCS9 EDGE throughput up to 236kbps

1.6.3 LoRa module – LoRa LOC

1.6.3.1 Mechanical description

1.6.3.1.1 Single "LoRa-LOC" module

The LoRa-LOC module is composed of five main mechanical parts:

- A "three-sides" flange including:
  - the connectors and interfaces placement
  - venting of internal boards through many holes
- A rear plate with DIN rail clipping points and spring
- Two radiators used as right and left side flanges
- A front-end lid, used as a shield for the front-end board

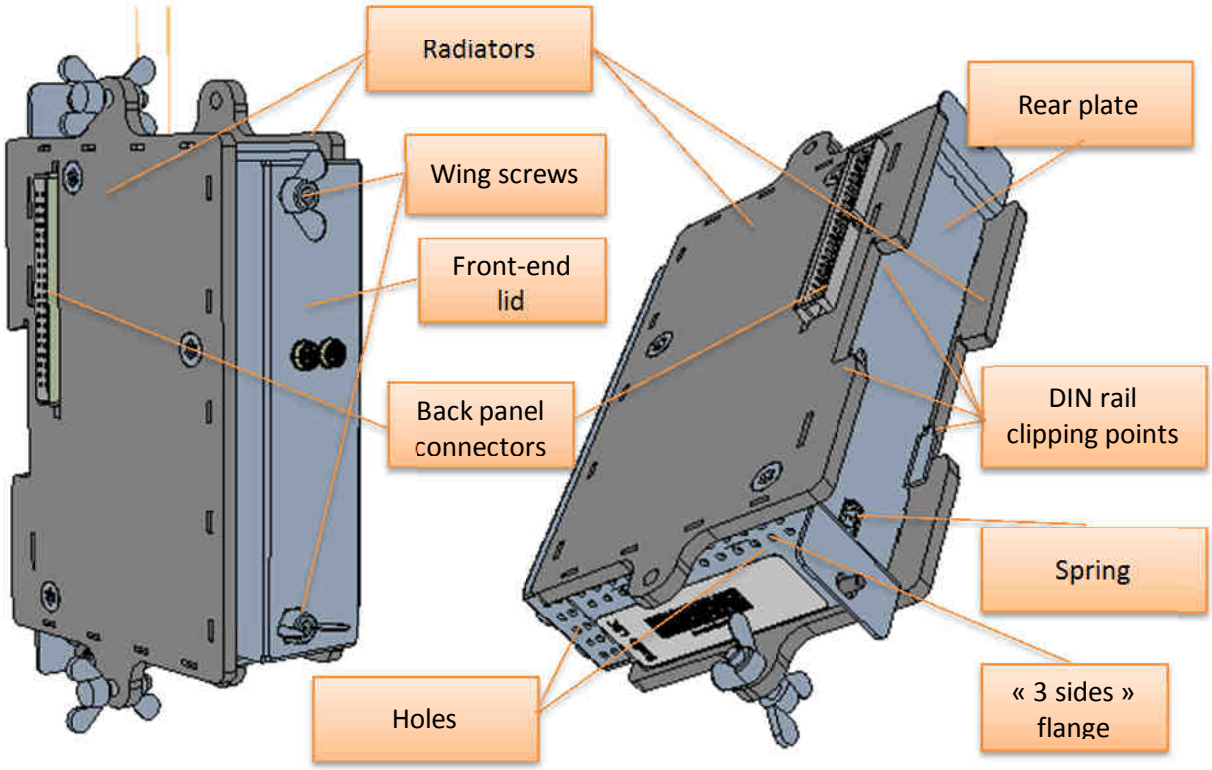

Figure 17: Mechanical description of the LoRa – LOC module

The rear plate and the two radiators side flanges are the same as the one used for the CPU module or the WAN module. The "three-sides" flange is different from the one used for the CPU module or WAN modules due to different interfaces and connectors but dimensions are the same.
The front-end lid is then a particular mechanical part dedicated only for the LoRa modules.
The front-end lid is tightened to the other mechanical parts through the wing screws on the front.

The main mechanical characteristics of the Lora module are detailed hereafter:

Description	Specification
Radiators material	Aluminum
Other flanges and lid material	Galvanized Steel
Dimensions	156 mm x 102 mm x 38 mm
Weight	600 g
Ingress protection	IP30

The Lora-LOC board integrates the LoRa-LOC modem based on the AD9361 transceiver (Analog Devices) and SX1301 (Semtech) + DSP as demodulators.

A front-end board embeds the radio transmitters and receivers. Three versions are derived to support the different unlicensed bands:

- 868MHz (863-873MHz)
- 915MHz (902-928MHz)
- 923MHz (915-928MHz)

1.6.3.1.2 Four "LoRa-LOC" modules

The four "LoRa-LOC" modules version is composed of 4 single LoRa-LOC RF modules.
The front-end board and the front-end lid of each individual module are removed and replaced by a single common front-end board and front-end lid, covering and combining the four modules together.

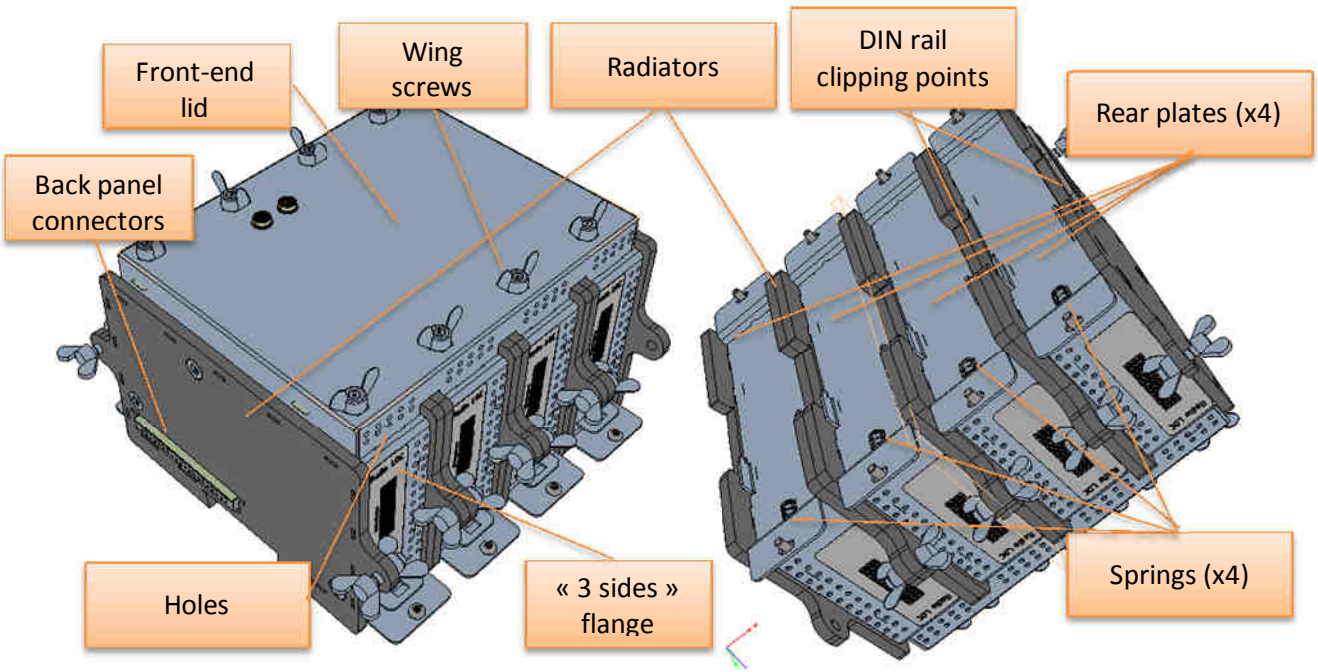

Figure 18: Mechanical description of the four LoRa LOC modules configuration

The rear plates and the two radiators side flanges are still unchanged.
The front-end lid is tightened to the other mechanical parts through the wing screws on the front.

The main mechanical characteristics of the Lora module are detailed hereafter:

Description	Specification
Radiators material	Aluminum
Other flanges and lid material	Galvanized Steel
Dimensions	156 mm x 102 mm x 152 mm
Total weight	1700 g
Ingress protection	IP30

Four Lora LOC boards are used. They integrate the AD9361 transceiver and SX1301 + DSP as demodulators, as described previously.

A front-end board embeds the radio transmitters and receivers. Two versions are declined to support the different unlicensed bands:

- 915MHz (902-928MHz)
- 923MHz (915-928MHz)

1.6.3.2 Connectors and user interfaces

1.6.3.2.1 Single LoRa-LOC module

The LoRa LOC module includes the following user interfaces and connectors:

Module side	Connector / interface	Description
Front side	LoRa RF SMB connector # RF1	LoRa RF signal to be connected to the LoRa antenna # 1
Front side	LoRa RF SMB connector # RF2	LoRa RF signal to be connected to the LoRa antenna # 2
Right side	Back panel HE10 male 40 contacts connector	Transmit the power supplies and high speed serial bus to the next module
Left side	Back panel HE10 female 40 contacts connector	Receive the power supplies and high speed serial bus from the previous module

The LoRa SMB RF connector's # RF1 and # RF2 are connected to the SMB/N adapters on the bottom side of the Wirnet iBTS via SMB coaxial cables.

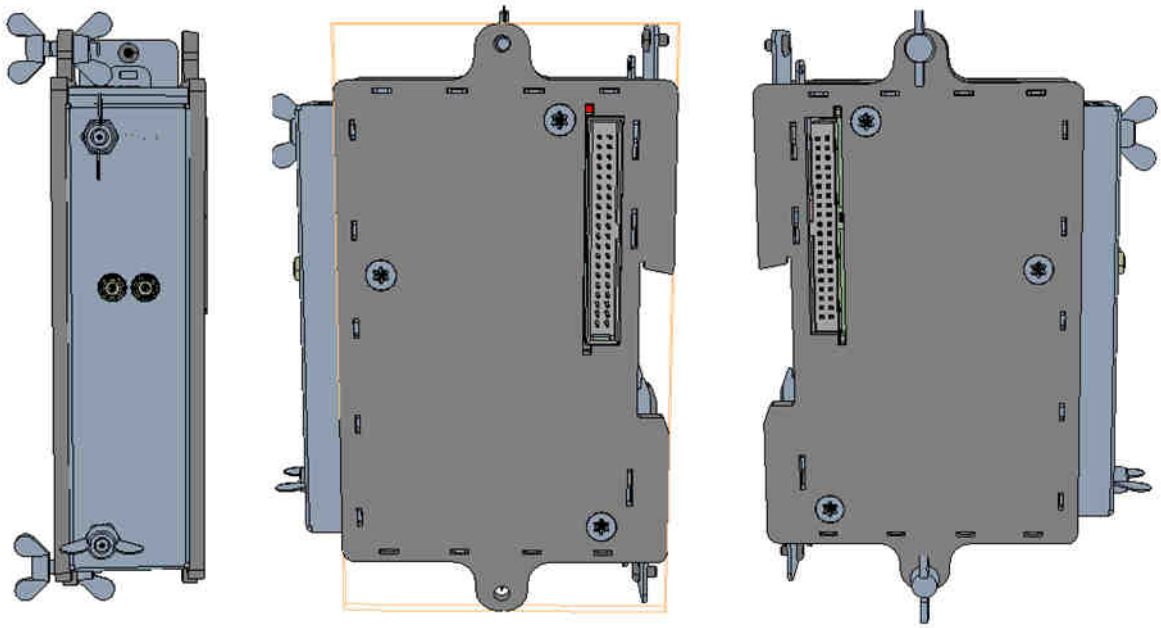

Figure 19: Connectors and user interfaces of the LoRa LOC module

The RF1 connector is on the left side of the front-end lid.
The RF2 connector is on the right side of the front-end lid.
The positions of the RF1 and RF2 connectors are indicated on the sticker on top of the LoRa LOC module as follows:

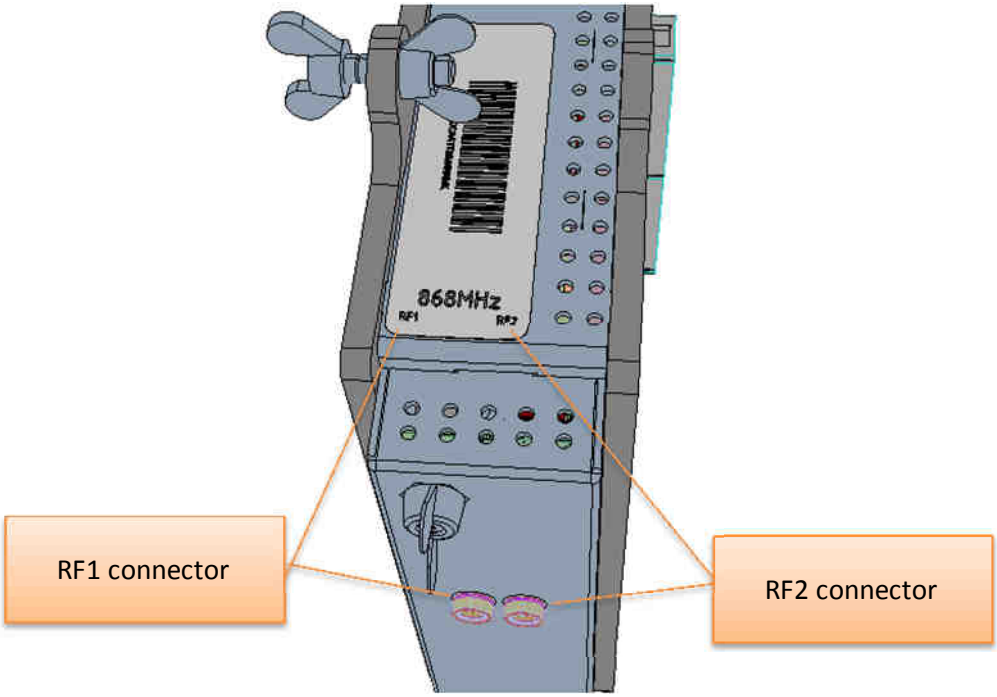

Figure 20: RF1 and RF2 connectors of the LoRa LOC module

Note: RF1 stands for RF path 1, RF2 stands for RF path 2.

1.6.3.2.2 Four LORA-LOC modules

The LoRa LOC "4 modules" configuration includes the following user interfaces and connectors:

Module side	Connector / interface	Description
Front side	LoRa RF SMB connector # RF1	LoRa RF signal to be connected to the LoRa antenna # 1
Front side	LoRa RF SMB connector # RF2	LoRa RF signal to be connected to the LoRa antenna # 2
Right side	Back panel HE10 male 40 contacts connector	Transmit the power supplies and high speed serial bus to the next module
Left side	Back panel HE10 female 40 contacts connector	Receive the power supplies and high speed serial bus from the previous module

The LoRa SMB RF connector's # RF1 and # RF2 are connected to the SMB/N adapters on the bottom side of the Wirnet iBTS via SMB coaxial cables.

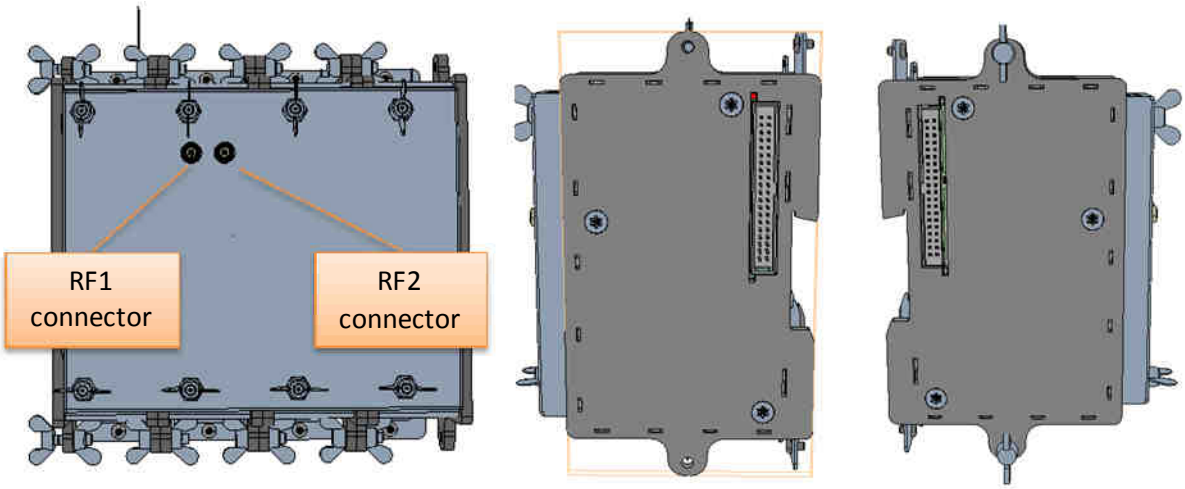

Figure 21: Connectors and user interfaces of the 4 LoRa LOC modules

The RF1 connector is on the left side of the front-end lid.
The RF2 connector is on the right side of the front-end lid.
The positions of the RF1 and RF2 connectors are indicated on the sticker on top of the LoRa LOC module (similar to single LoRa LOC module).

Note: RF1 stands for RF path 1, RF2 stands for RF path 2.

1.6.3.3 LoRa LOC modem characteristics

The mains characteristics of the LoRa-LOC modem are detailed in the following table:

Feature	Description
LoRa demodulator (x2)	Based on SX1301 digital signal processing engine from Semtech
	True antenna diversity or simultaneous dual-band operation
	10 programmable parallel receive paths
	Emulates 49 x LORA demodulators and 1 x (G)FSK demodulator per SX1301: • 8 x LoRa demodulator at dynamic data rate with 125KHz BW • 1 x LoRa demodulator at fixed data rate • 1 x (G) FSK demodulator
	Dynamic data-rate (DDR) adaptation Detect simultaneously 8 preambles corresponding to all data rates (Spreading Factor) at LoRa 125KHz BW
	2 MHz baseband BW
	FSK or LORA modulator
Geolocalization	Outdoor and indoor environments
	Synchronization with GPS PPS clock
	Combines RSSI and TDOA measurements
	Accuracy < 50m (90% confidence, high density coverage)
Transceiver	Based on Analog Devices AD9361
	70MHz to 6000MHz frequency range
	200 kHz to 56 MHz channel BW
	Integrated fractional-N synthesizers
	2 × 2 transceiver with integrated 12-bit DACs and ADCs - Dual transmitters: 4 differential outputs - Dual receivers: 6 differential or 12 single-ended inputs
	Highly linear broadband transmitter
	+8dBm typ. output power
	90dB output power control range
	164dBc/Hz Signal to Noise performance at 90MHz offset
	Receiver Noise Figure of 2 dB
	+40dBm IIP2 at max gain
	-18dBm IIP3 at max gain
	Independent automatic gain control
	DC offset correction, quadrature correction and digital filtering
	Very low LO leakage
Sniffer (x2)	Based on Semtech SX1239
	300MHz to 1020MHz frequency range
	FSK, GFSK, MSK, GMSK and OOK demodulator

	FSK Bit rates up to 300 kb/s
	Digital filtering, demodulation, AGC, AFC, synchronization and packet handling
	Accurate RSSI measurements through automatic gain calibration
	115dB Dynamic Range RSSI
	+35dBm to +75dBm IIP2 depending on AGC configuration
	-18dBm to +20dBm IIP3 depending on AGC configuration
	66 dB typ. CW interferer rejection at 1 MHz offset
	79 dB typ. CW interferer rejection at 10 MHz offset
Auto test	Check of the LoRa LOC module power supplies by M3 MCU
Operating temperature range	-20°C to +85°C
Current drain @48V	130mA in Receive Mode (all demodulators activated)
	120mA in Transmit mode@27dBm

1.6.3.4 Front-end boards

1.6.3.4.1 Front-end board - Single module

The following block diagram details the architecture of the front-end board, in a single module configuration:

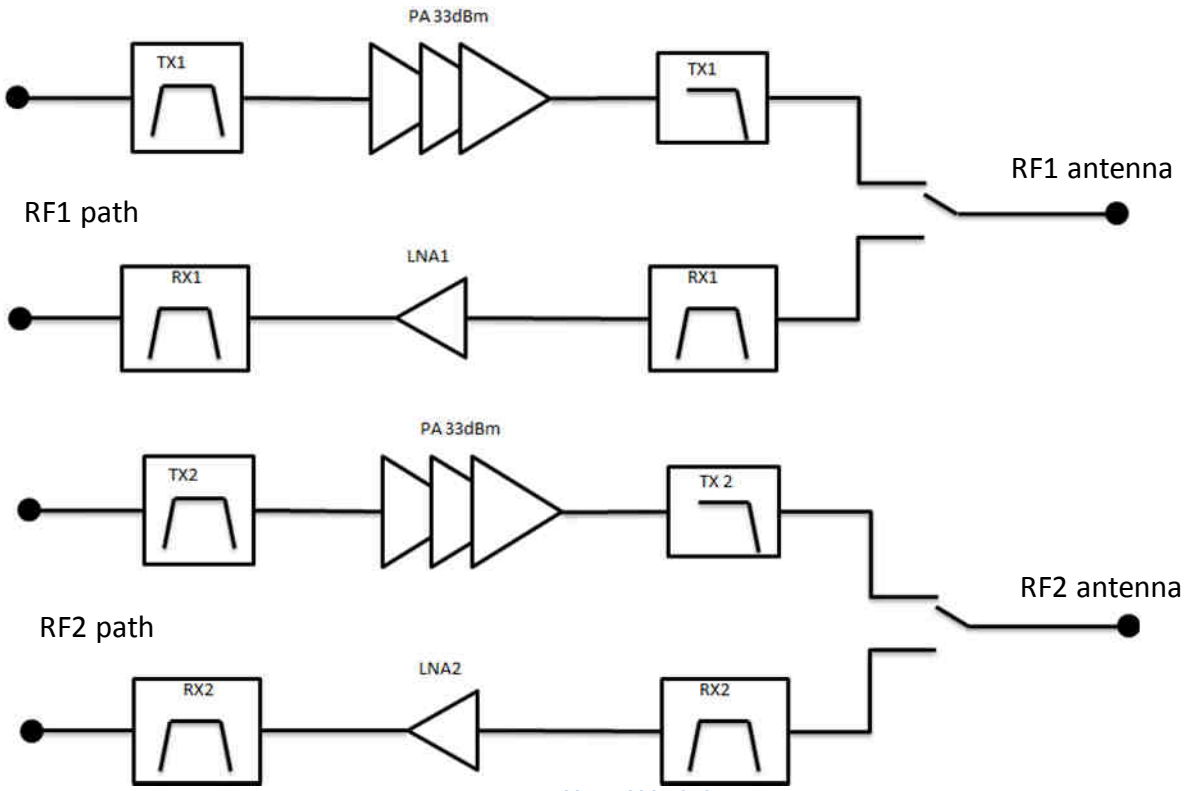

Figure 22: Front-end board block diagram

The front-end board integrates two duplicated TX and Rx paths (RF1 path and RF2 path). Each TX/RX path is connected to one SMB antenna port, referenced as RF1 and RF2.
Each path is detailed hereafter:

The front-end board is derived in three different versions to cover the unlicensed bands:

- 868MHz (863-873MHz)
- 915MHz (902-928MHz)
- 923MHz (915-928MHz)

The details of the frequency bands, channelization, out of band rejection are detailed in §1.6.3.6.

1.6.3.4.2 Front-end board - Four modules

The following block diagram details the architecture of the front-end board, in a four modules configuration:

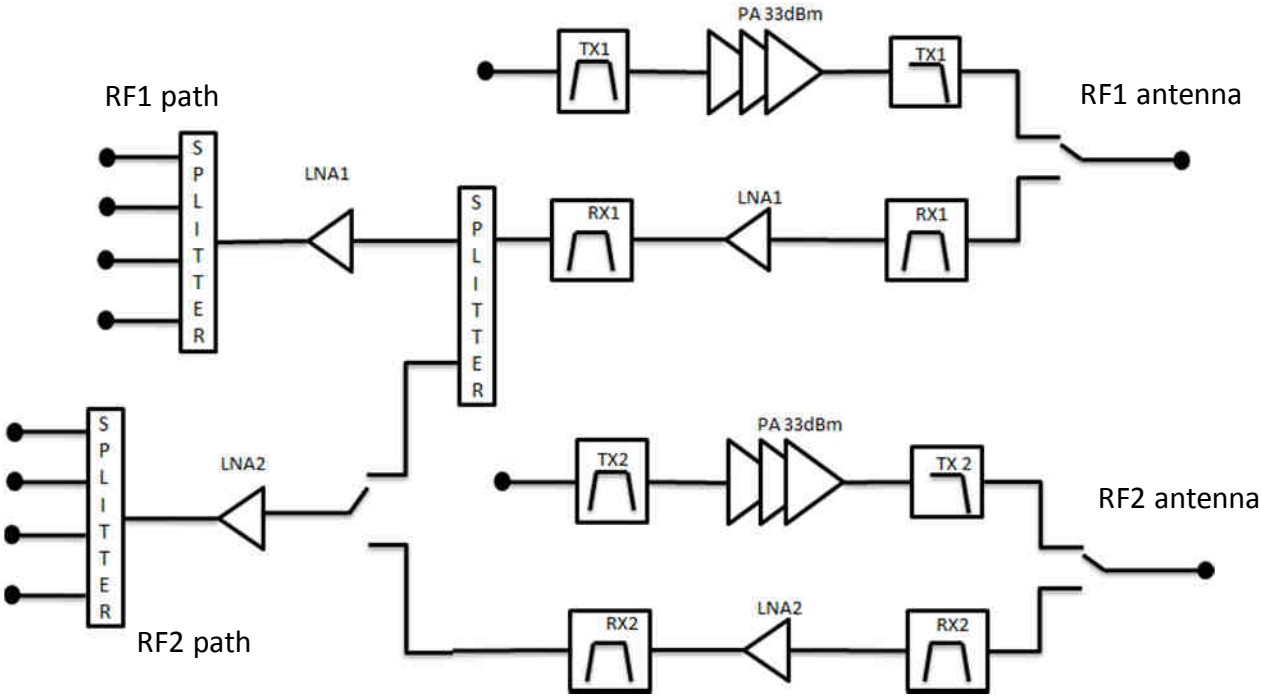

Figure 23: Front-end 4 modules board block diagram

The front-end board integrates two TX and two Rx paths (RF1 path and RF2 path). Each TX/RX path is connected to one SMB antenna port (RF1 and RF2 respectively).

The front-end board is derived in two different versions to cover the unlicensed bands:

- 915MHz (902-928MHz)
- 923MHz (915-928MHz)

The details of the frequency bands, channelization, out of band rejection are detailed in §1.6.3.6.

1.6.3.5 Modulations and data rates

The LoRa LOC module supports the following modulation schemes:

SF	BW (KHz)	Data rate (kbps)
7	500	21875
8	500	12500
9	500	7031
10	500	3906
11	500	2148
12	500	1172
7	250	10938
8	250	6250
9	250	3516
10	250	1953
11	250	1074
12	250	586
7	125	5469
8	125	3125
9	125	1758
10	125	977
11	125	537
12	125	293

Note : Payload may have to be adjusted to not overrule 400ms frame length, depending on the local regulations. In this case, SF11/125KHz and SF12/125KHz are not used.

1.6.3.6 Frequency bands and channelization

The frequency bands covered by the Wirnet iBTS depends on the version of the front-end module used (868, 915 or 923).

The downstream frequencies and upstream frequencies are listed in the following table:

Version	Link	Frequency range start/end
868	Upstream (RX Wirnet iBTS)	863MHz / 873MHz
868	Downstream (TX Wirnet iBTS)	863MHz / 873MHz
915	Upstream (RX Wirnet iBTS)	902MHz / 928MHz
915	Downstream (TX Wirnet iBTS)	902MHz / 928MHz
923	Upstream (RX Wirnet iBTS)	915MHz / 928MHz
923	Downstream (TX Wirnet iBTS)	920MHz / 928MHz

LoRaWAN specification defines a more accurate frequency plan and channelization, although different options could be envisaged.

The channels are summarized in the following table:

Version	Link	Channel frequency	LoRa BW (KHz)	Number of channels	Channel BW (KHz)
915	Upstream (RX Wirnet iBTS)	902,3+i*0,2MHz (i=0 à 63)	125	64	200
915	Upstream (RX Wirnet iBTS)	903,0+i*1.6MHz (i=0 à 7)	500	8	600
915	Downstream (TX Wirnet iBTS)	923,3+i*0.6MHz (i=0 à 7)	500	8	600
923	Upstream (RX Wirnet iBTS)	915,2+i*0,2MHz (i= 0 à 63)	125	64	200
923	Upstream (RX Wirnet iBTS)	915,9+i*1.6MHz (i=0 à 7)	500	8	600
923	Downstream (TX Wirnet iBTS)	919,8+i*0,2MHz (i= 0 à 40)	125	41	200
923	Downstream (TX Wirnet iBTS)	920,3+i*0.6MHz (i=0 à 12)	500	13	600
868	Upstream (RX Wirnet iBTS)	863,1+i*0,2MHz (i= 0 à 27)	125	28	200
868	Downstream (TX Wirnet iBTS)	863,1+i*0,2MHz (i= 0 à 27)	125	28	200
868	Upstream (RX Wirnet iBTS)	868,9+i*0,2MHz (i= 0 à 1)	125	2	200
868	Downstream (TX Wirnet iBTS)	868,9+i*0,2MHz (i= 0 à 1)	125	2	200
868	Upstream (RX Wirnet iBTS)	869,525MHz	125	1	250
868	Downstream (TX Wirnet iBTS)	869,525MHz	125	1	250
868	Upstream (RX Wirnet iBTS)	869,850MHz	125	1	300
868	Downstream (TX Wirnet iBTS)	869,850MHz	125	1	300
868	Upstream (RX Wirnet iBTS)	870,1+i*0,2MHz (i= 0 à 14)	125	15	200
868	Downstream (TX Wirnet iBTS)	870,1+i*0,2MHz (i= 0 à 14)	125	15	200

This document is the strict property of Kerlink and shall not be either copied nor sent without express written authorization of Kerlink
Kerlink m2m technologies reserved rights

Note : in South Korea, the channels defined for the "923" version must be shifted by 100KHz to meet Korean regulations i.e. 917.1MHz to 923.3MHz with 200KHz steps.

1.6.3.7 Output Power

The conducted output power can be adjusted from 0dBm to +31dBm.
This offers a wide range of adjustment to cover all specific countries EIRP requirements.
Antenna gain has to be considered to adjust the conducted output power to not overrule the max allowed EIRP.

Description	Specification
Conducted output power range	0dBm to +31dBm
Ripple in the band	+/- 2dB
Variation over temperature range (-20°C to +55°C)	+/- 2dB

1.6.3.8 Out of band emissions

Due to the very low noise transmitter, the LoRa LOC module is able to achieve excellent out of band emissions levels in the LTE, UMTS and GSM uplink or downlink bands.

The performances are summarized in the following table:

Version LoRa LOC module	LTE, UMTS or GSM band	Out of band emissions
868	E-GSM900 UL (880-915MHz)	-85dBm/100KHz
868	R-GSM900 UL (876-915MHz)	-75dBm/100KHz
868	LTE800 (832-862MHz)	-80dBm/100KHz
915	GSM850 DL (869-894MHz)	-85dBm/100KHz
923	GSM900 UL(890-915MHz)	-85dBm/100KHz
923	GSM900 DL(935-960MHz)	-85dBm/100KHz

The performances detailed here are worst case i.e. when transmitting at maximum output power at the edge of the band.
Out of band emissions in other LTE, UMTS or GSM bands are not detailed but are obviously better.
The LORA-LOC module is therefore ideal in co-localization with BTS.

1.6.3.9 Sensitivity

The sensitivity performance, depending on the version, at 10% PER, 20 bytes payload is the following:

Mode	868MHz	915MHz	923MHz
SF7/125KHz	-129dBm	-129dBm	-128dBm
SF10/125KHz	-133dBm	-133dBm	-132dBm
SF12/125KHz	-141dBm	-141dBm	-140dBm
SF7/250KHz	-126dBm	-126dBm	-125dBm
SF12/250KHz	-136dBm	-136dBm	-135dBm
SF7/500KHz	-122dBm	-122dBm	-122dBm
SF12/500KHz	-134dBm	-134dBm	-133dBm

The sensitivity may vary over the frequency band and over temperature as follows:

Description	Specification
Sensitivity variation over the band	+/- 1dB
Sensitivity variation over temperature range (-20°C to +60°C)	+/- 1dB

1.6.3.10 RSSI and SNR

The Wirnet iBTS is able to receive LoRa frames from -20dBm to -141dBm, depending on the LoRa BW and SF.
The Wirnet iBTS provides for each received frame, the RSSI and the SNR.
The RSSI is the "signal + noise" measurement of the received frame. Due to the wide spreading modulation, the LoRa receiver is able to demodulate signals below the noise floor i.e. with negative SNR.
To estimate the signal strength of the received frame, both SNR and RSSI have to be considered. As a rough estimate:

- If SNR >0, the signal strength = RSSI (dBm)
- If SNR <0, the signal strength = RSSI+SNR (dBm)

RSSI varies from -20dBm to -120dBm. -120dBm is the noise floor measured in a 200KHz BW.
SNR is between 10 to 15dB for strong signals. It is close to 0dB when the signal strength approaches -120dBm. It can decrease down to -7dB or -20dB depending on the SF:

Spreading Factor	LoRa demodulator SNR
SF7	-7.5dB
SF8	-10dB
SF9	-12.5dB
SF10	-15dB
SF11	-17.5dB
SF12	-20dB

The following picture is an example of LoRa receiver characterization at SF7 / 125KHz BW. It describes the SNR, RSSI and RSSI+SNR measured vs. the signal strength:

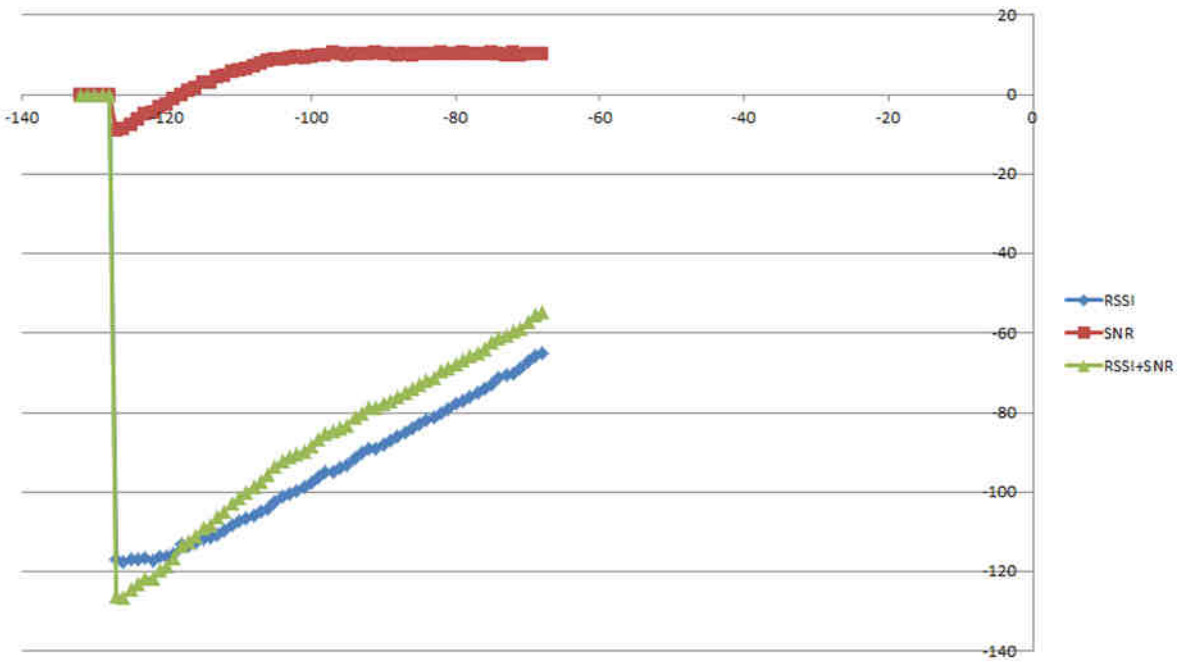

Figure 24: Example of SNR, RSSI and RSSI+SNR plots at 125KHz BW / SF7

1.6.3.11 Out of band blockers rejection

In the following tables, the out of band rejection is measured with a useful signal (LoRa) adjusted 3dB above the sensitivity. The blocker level (CW) is adjusted to reach 10% PER.
The level of the blockers is noticed in the table and also the difference (in dB) with the useful LoRa signal.

1.6.3.11.1 868MHz

The useful signal is adjusted at 869.525MHz.

The blockers rejections, at different SF are the following:

Offset	SF7/125KHz	SF10/125KHz	SF12/125KHz
+2MHz	-47dBm (79dB)	-	-
-2MHz	-48dBm (78dB)	-	-
+10MHz	-15dBm (111dB)	-	-
-10MHz	-40dBm (86dB)	-	-
821MHz	-14dBm (112dB)	-	-
880MHz	-15dBm (111dB)	-	-
935MHz	-	-	-
960MHz	-	-	-

1.6.3.11.2 915MHz

The useful signal is adjusted at 915MHz.

The blockers rejections, at different SF are the following:

Offset	SF7/125KHz	SF10/125KHz	SF12/125KHz
+2MHz	-49dBm (77dB)	-44dBm (86dB)	-46dBm (92dB)
-2MHz	-49dBm (77dB)	-44dBm (86dB)	-46dBm (92dB)
+10MHz	-35dBm (91dB)	-33dBm (97dB)	-33dBm (105dB)
-10MHz	-38dBm (91dB)	-36dBm (94dB)	-36dBm (102dB)
850MHz	-12dBm (114dB)	-12dBm (118dB)	-13dBm (125dB)
894MHz	-15dBm (111dB)	-15dBm (115dB)	-15dBm (123dB)
935MHz	-15dBm (111dB)	-15dBm (115dB)	-15dBm (123dB)
960MHz	-13dBm (113dB)	-13dBm (117dB)	-13dBm (125dB)

1.6.3.11.3 923MHz

The useful signal is adjusted at 923MHz.

The blockers rejections, at different SF are the following:

Offset	SF7/125KHz	SF10/125KHz	SF12/125KHz
+2MHz	-45dBm (80dB)	-	-43dBm (94dB)
-2MHz	-45dBm (80dB)	-	-40dBm (97dB)
+10MHz	-43dBm (82dB)	-	-40dBm (97dB)
-10MHz	-23dBm (102dB)	-	-34dBm (103dB)
850MHz	-	-	-
894MHz	-	-	-
910MHz	-	-	-
935MHz	-	-	-
960MHz	-	-	-

1.7 Description of the accessories

1.7.1 PoE injectors

Two kinds of Midspan PoE injectors can be provided with the Wirnet iBTS:

- Midspan PoE injector 30W
- Midspan PoE injector 60W

The Midspan PoE injector 30W is dedicated to the Wirnet iBTS Compact.
The Midspan PoE injector 60W is dedicated to the Wirnet iBTS featuring "LoRa-LOC" LoRa modules.
Both versions can be declined for indoor applications or outdoor applications.

Note 1: beware of the operating ambient temperature of the Midspan PoE injectors. Output power derating over +40°C has to be carefully considered to insure proper supply of the Wirnet iBTS. If the ambient temperature range cannot be guaranteed below +40°C, the Midspan PoE injector may have to be re-dimensioned. A 60W PoE injector could be then recommended instead of a 30W PoE injector. A 90W PoE injector could be also recommended instead of a 60W PoE injector.

Note 2: the power supply of the Wirnet iBTS must be a limited power source. All the PoE injectors listed below must then considered as limited power sources.

1.7.1.1 Indoor Midspan PoE injector 30W

The indoor Midspan PoE injector 30W characteristics are detailed in the following table:

Description	Specification
Ethernet data rates	10/100/1000Base-T
Number of ports	1
PoE compliance	IEEE 802.3at IEEE 802.3af backward compatible
PoE Output Power	30 Watts (Guaranteed)
PoE Output Voltage	55 VDC
PoE Pin Assignment and Polarity	4/5 (+), 7/8 (–)
Input Power Requirements	AC Input Voltage: 100 to 240 VAC AC Input Current: 0.8A @100-240VAC AC Frequency: 50 to 60 Hz
Dimensions	53 mm (W) x 32.5 mm (H) x 140 mm (L)
Weight	200g
Connectors	Shielded RJ-45, EIA 568A and 568B
Indicator	AC Power (Yellow) Channel Power (Green)

Operating Ambient Temperature	-20°C to +40°C @ 30W -20°C to +55°C @ 25W
Operating Humidity	Maximum 90%, Non-condensing
Storage Temperature	-20°C to +70°C
Storage Humidity	Maximum 95%, Non-condensing
Regulatory compliance	RoHS WEEE CE
Electromagnetic Emission & Immunity	FCC Part 15, Class B EN 55022 Class B (Emissions) EN 55024 (Immunity) VCCI
Safety Approvals	UL/cUL Per IEC 60950-1 GS Mark Per IEC 60950-1

Note 1: beware of the operating ambient temperature. Output power derating over +40°C has to be carefully considered to insure proper supply of the Wirnet iBTS.

The following figure details the indoor Midspan PoE injector 30W:

Figure 25 : indoor 30W POE injector

The indoor Midspan PoE injector 30W can be provided with E/F type cable (Europe) or B type cable (USA). See §6 to order the required version.

Note 2: this indoor PoE injector must be connected to an industrial electrical installation including lighting protections. It must include a main board with surge protections type 1 and a secondary board with surge protections type 2.
If the electrical installation does not meet those requirements, use an alternate PoE injector featuring better surge protection as detailed in §1.7.1.3.

Note 3: this PoE injector is intended for indoor applications only.
In case the PoE injector cannot be installed indoor, use an alternate PoE injector dedicated to outdoor applications as detailed in §1.7.1.3.

1.7.1.2 Indoor Midspan PoE injector 60W

The indoor Midspan PoE injector 60W characteristics are detailed in the following table:

Description	Specification
Ethernet data rates	10/100/1000Base-T
Number of ports	1
PoE compliance	IEEE 802.3at IEEE 802.3af compatible
PoE Output Power	60 Watts over 4 pairs
PoE Output Voltage	55 VDC
PoE Pin Assignment and Polarity	Data Pairs 1/2 (-) and 3/6 (+) Spare Pairs 7/8 (-) and 4/5 (+)
Input Power Requirements	AC Input Voltage: 100 to 240 VAC AC Input Current: 1.2A @100-240VAC AC Frequency: 50 to 60 Hz
Dimensions	62 mm (W) x 38 mm (H) x 151 mm (L)
Weight	320g
Connectors	Shielded RJ-45, EIA 568A and 568B
Indicator	AC Power (Yellow) Channel Power delivered over 4 pairs (Green)
Operating Ambient Temperature	-10°C to +40°C @ 60W -10°C to +55°C @ 30W
Operating Humidity	Maximum 90%, Non-condensing
Storage Temperature	-20°C to +70°C
Storage Humidity	Maximum 95%, Non-condensing
Regulatory compliance	RoHS WEEE CE
Electromagnetic Emission & Immunity	FCC Part 15, Class B EN 55022 Class B (Emissions) EN 55024 (Immunity) VCCI
Safety Approvals	UL/cUL Per IEC 60950-1 GS Mark Per IEC 60950-1

Note 1: beware of the operating ambient temperature. Output power derating over +40°C is critical and has to be carefully considered to insure proper supply of the Wirnet iBTS.

The following figure details the indoor Midspan PoE injector 60W:

Figure 26 : 60W POE injector

The indoor Midspan PoE injector 60W can be provided with E/F type cable (Europe) or B type cable (USA). See §6 to order the required version.

Note 2: this indoor PoE injector must be connected to an industrial electrical installation including lighting protections. It must include a main board with surge protections type 1 and a secondary board with surge protections type 2.
If the electrical installation does not meet those requirements, use an alternate PoE injector featuring better surge protection as detailed in §1.7.1.4.

Note 3: this PoE injector is intended for indoor applications only.
In case the PoE injector cannot be installed indoor, use an alternate PoE injector dedicated to outdoor applications as detailed in §1.7.1.4.

1.7.1.3 Outdoor Midspan PoE injector 30W

The outdoor Midspan PoE injector 30W characteristics are detailed in the following table:

Description	Specification
Ethernet data rates	10/100/1000Base-T
Number of ports	1
PoE compliance	IEEE 802.3at IEEE 802.3af backward compatible
PoE Output Power	30 Watts (Guaranteed)

PoE Output Voltage	55 VDC
PoE Pin Assignment and Polarity	4/5 (+), 7/8 (–)
Input Power Requirements	AC Input Voltage: 100 to 240 VAC AC Input Current: 1A @100-240VAC AC Frequency: 50 to 60 Hz
Dimensions	150 mm (W) x 70 mm (H) x 214 mm (L)
Weight	750g
Connectors	Shielded rugged RJ-45 with gasket EIA 568A and 568B
Indicator	None
Operating Ambient Temperature	-40°C to +55°C @ 30W -40°C to +65°C @ 15.4W
Operating Humidity	Maximum 95%, Non-condensing
Storage Temperature	-40°C to +85°C
Storage Humidity	Maximum 95%, Non-condensing
Ingress protection	IP66, NEMA 4X
Corrosion resistance	ASTM B-117
Regulatory compliance	RoHS WEEE CE
Electromagnetic Emission & Immunity	FCC Part 15, Class B EN 55022 Class B (Emissions) EN 55024 (Immunity) EN 61000-4-5 Class 5 (6kV CM) VCCI
Surge protection	GR-1089-CORE Issue 4 ITU-T K.20 6 kV on AC lines
Safety Approvals	UL 60950-1, UL 60950-22 GS Mark

Note 1: beware of the operating ambient temperature. Output power derating over +55°C has to be carefully considered to insure proper supply of the Wirnet iBTS.

The following figure details the outdoor Midspan PoE injector 30W:

Figure 27 : Outdoor 30W POE injector

Note 2: this PoE injector must be connected to an industrial electrical installation including at least a main board with surge protections type 1.

1.7.1.4 Outdoor Midspan PoE injector 60W

The outdoor Midspan PoE injector 60W characteristics are detailed in the following table:

Description	Specification
Ethernet data rates	10/100/1000Base-T
Number of ports	1
PoE compliance	IEEE 802.3at IEEE 802.3af compatible
PoE Output Power	60 Watts over 4 pairs
PoE Output Voltage	55 VDC
PoE Pin Assignment and Polarity	Data Pairs 1/2 (-) and 3/6 (+) Spare Pairs 7/8 (-) and 4/5 (+)
Input Power Requirements	AC Input Voltage: 100 to 240 VAC AC Input Current: 2A @100-240VAC AC Frequency: 50 to 60 Hz
Dimensions	150 mm (W) x 70 mm (H) x 214 mm (L)
Weight	750g
Connectors	Shielded rugged RJ-45 with gasket EIA 568A and 568B
Indicator	None
Operating Ambient Temperature	-40°C to +50°C @ 60W -40°C to +55°C @ 30W
Operating Humidity	Maximum 95%, Non-condensing

Storage Temperature	-40°C to +85°C
Storage Humidity	Maximum 95%, Non-condensing
Ingress protection	IP66, NEMA 4X
Corrosion resistance	ASTM B-117
Regulatory compliance	RoHS WEEE CE
Electromagnetic Emission & Immunity	FCC Part 15, Class B EN 55022 Class B (Emissions) EN 55024 (Immunity) EN61000-4-5 Class 5 (6kV CM) VCCI
Surge protection	GR-1089-CORE Issue 4 ITU-T K.20 6 kV on AC lines
Safety Approvals	UL 60950-1, UL 60950-22 GS Mark

Note 1: beware of the operating ambient temperature. Output power derating over +50°C is critical and has to be carefully considered to insure proper supply of the Wirnet iBTS.

The following figure details the outdoor Midspan PoE injector 60W:

Figure 28 : Outdoor 60W POE injector

Note 2: this PoE injector must be connected to an industrial electrical installation including at least a main board with surge protections type 1.

1.7.2 LoRa antennas

1.7.2.1 Omnidirectional antenna 868MHz 3dBi

The specifications of the omnidirectional 868MHz / 3dBi antenna are the following:

Item	Specification
Frequency range	868MHz +/- 5MHz
Impedance	50 ohms
Technology	Half wave
VSWR	<1.3:1
Max gain	3dBi
Polarization	Vertical
Power handling	50W
DC ground	Yes
Whip material	Fiberglass
Connector	N female
Length	30 cm
Weight	75g
IP rating	IP66K
Shock resistance	IK08
Wind resistance	150MPH
Operating temperature range	-20°C to +60°C
Salt, fog	EN 60068-2-52, severity 1

The radiation patterns are presented here after. They are measured at 870MHz (red), 868MHz (green) and 866MHz (blue):

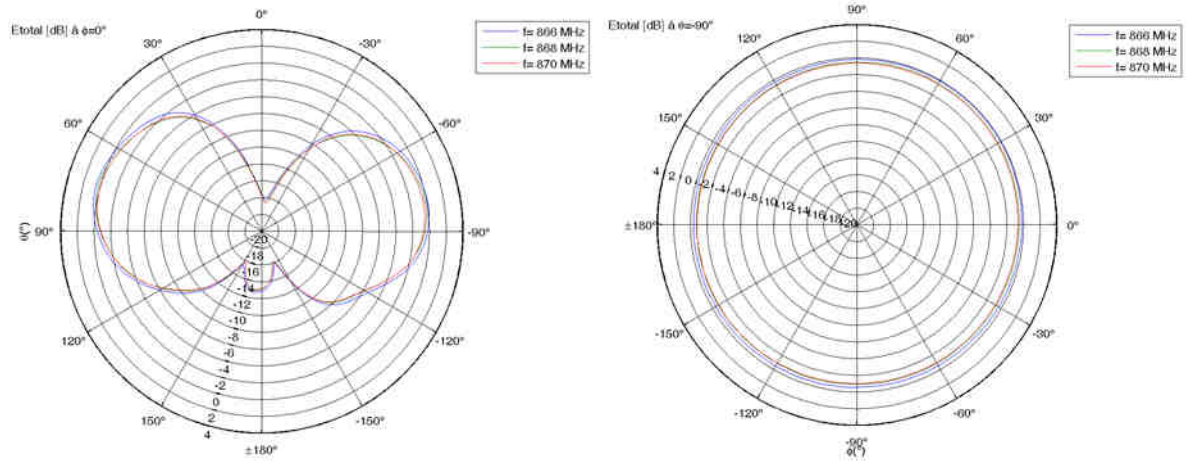

Figure 29 : Radiation pattern of omnidirectional 868MHz/3dBi antenna

1.7.2.2 Omnidirectional antenna 915MHz 3dBi

The specifications of the omnidirectional 915MHz / 3dBi antenna are the following:

Item	Specification
Frequency range	915MHz +/- 15MHz
Impedance	50 ohms
Technology	Half wave
VSWR	<1.3:1
Max gain	3dBi
Polarization	Vertical
Power handling	50W
DC ground	Yes
Whip material	Fiberglass
Connector	N female
Length	30 cm
Weight	75g
IP rating	IP66K
Shock resistance	IK08
Wind resistance	150MPH
Operating temperature range	-20°C to +60°C
Salt, fog	EN 60068-2-52, severity 1

The radiation patterns are presented here after. They are measured at 930MHz (red), 915MHz (green) and 900MHz (blue):

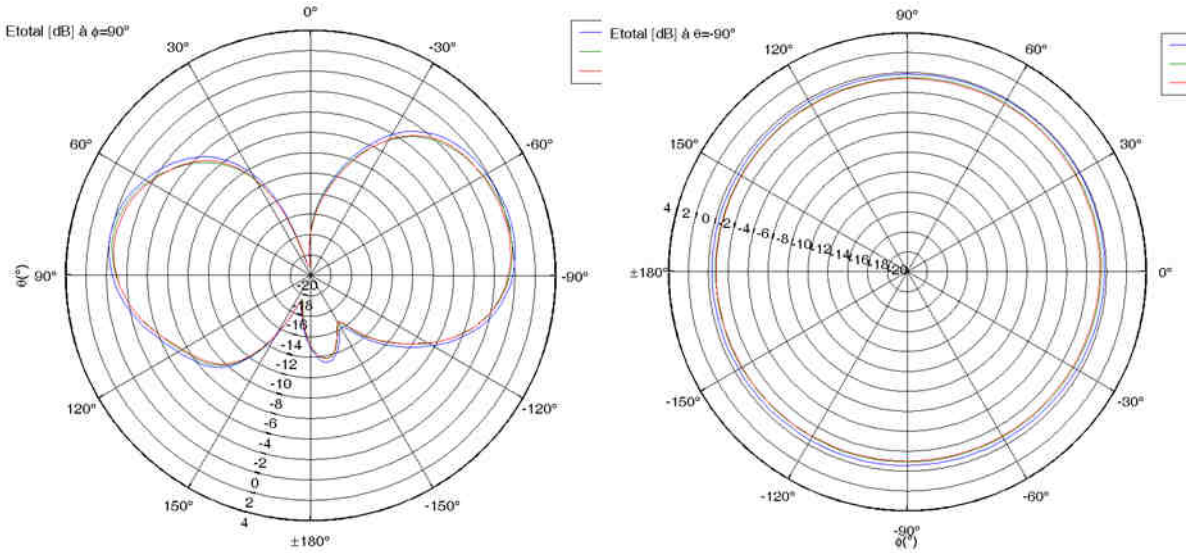

Figure 30 : Radiation pattern of omnidirectional 915MHz/3dBi antenna

1.7.2.3 Omnidirectional antenna 915MHz 6dBi

The specifications of the omnidirectional 915MHz / 6dBi antenna are the following:

Item	Specification
Frequency range	915MHz +/- 15MHz
Impedance	50 ohms
Technology	Collinear, dipole array
VSWR	<1.2:1
Max gain	6dBi
Polarization	Vertical
Power handling	50W
DC ground	No
Whip material	Fiberglass
Connector	N female
Length	100 cm
Weight	380g
IP rating	IP66K
Shock resistance	IK08
Operating temperature range	-20°C to +60°C
Salt, fog	EN 60068-2-52, severity 1

The radiation patterns are presented here after. They are measured at 900MHz (red), 915MHz (green) and 930MHz (blue):

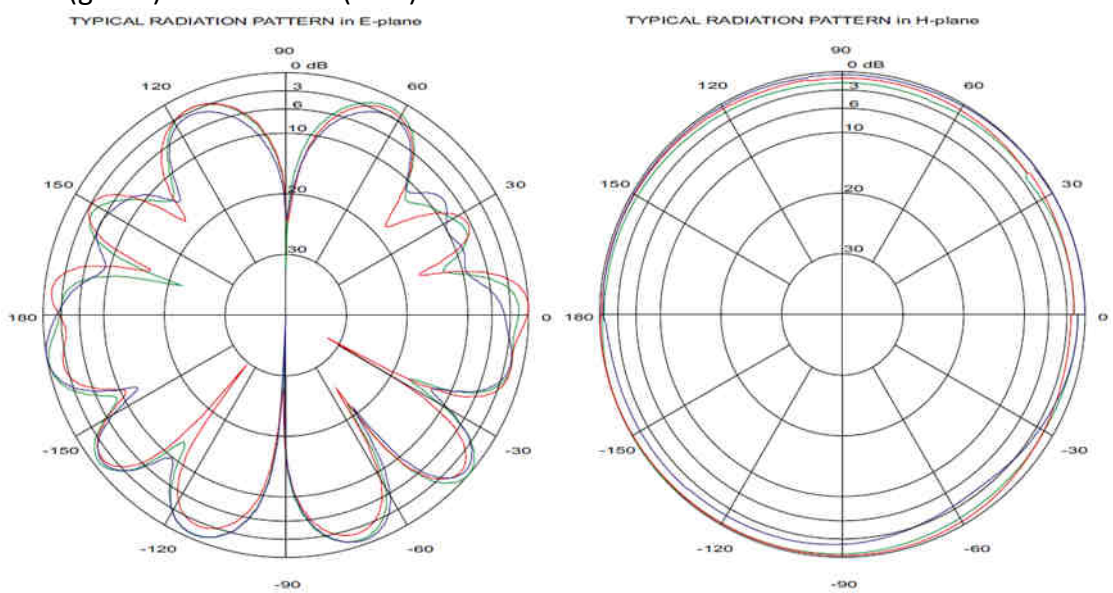

Figure 31 : Radiation pattern of omnidirectional 915MHz/6dBi antenna

KERLINK can provide two distinct references of 915MHz / 6dBi antennas, from two different suppliers. The first one must be installed on the universal antenna bracket whereas the second one has its own mounting kit. The second one cannot be installed on the universal antenna bracket.

1.7.3 Cavity filters

1.7.3.1 862-867MHz cavity filter

The 862-867MHz cavity filter is typically dedicated to the Indian market. The purpose of this filter is to avoid saturation and desensitization of the LoRa receiver due to co-located LTE850 or CDMA800 base stations.

The 862-867MHz cavity filter characteristics are detailed in the following table:

Characteristics	Specification
Center Frequency	864.5 MHz
Pass band	862-867MHz
Insertion losses	≤3dB
Ripple	≤1.2dB
Return Loss	≥18db
Rejection	≥60dB @ 857MHz & 872MHz ≥40dB @ 869MHz
Impedance	50 ohms
Power Handling	≤10W
Temperature	-30°C to+60°C
Connectors	N-Female / N-Male
Waterproof	IP66
Surface Finish	Black Paint
Dimensions (w/o N connectors)	150 x 80 x 50 mm

The dimensions of the 862-867MHz cavity filter are detailed hereafter:

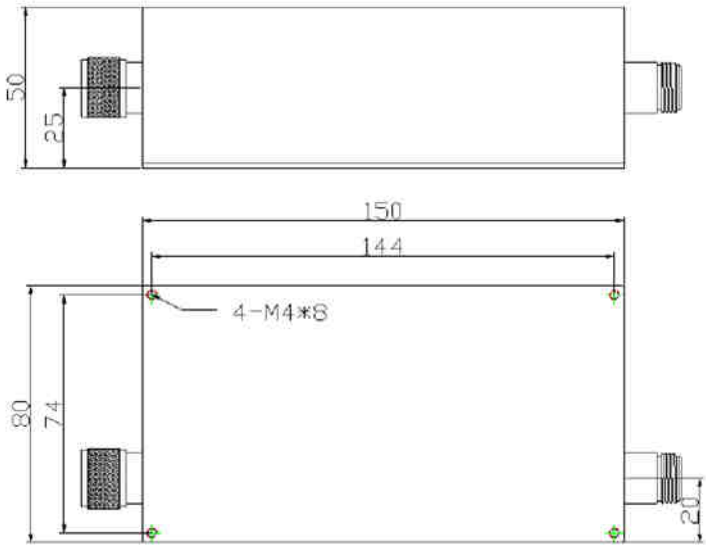

Figure 32 : Dimensions of the 862-867MHz cavity filter

The frequency response of 862-867MHz cavity filter is as follows:

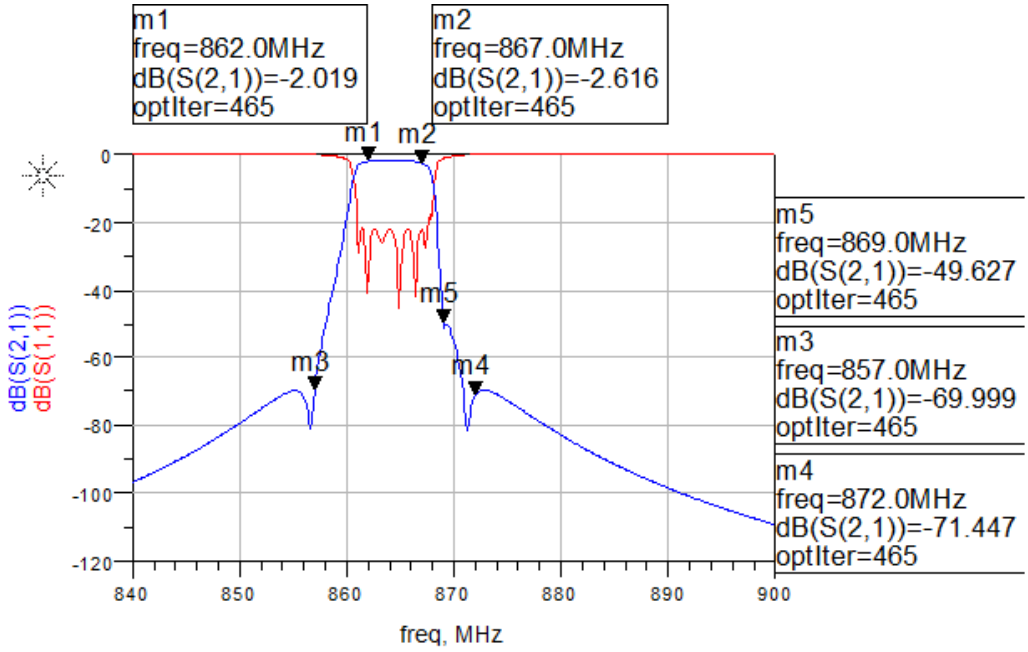

Figure 33 : Frequency response of the 862-867MHz cavity filter

1.7.3.2 920-925MHz cavity filter

The 920-925MHz cavity filter is typically dedicated to the Singapore market. The purpose of this filter is to avoid saturation and desensitization of the LoRa receiver due to co-located EGSM900 base stations.

The 920-925MHz cavity filter characteristics are detailed in the following table:

Characteristics	Specification
Center Frequency	922.5 MHz
Pass band	920-925MHz
Insertion losses	≤3dB
Ripple	≤1.2dB
VSWR	≤1.3:1
Rejection	≥60dB @ 915MHz ≥60dB @ 930MHz
Impedance	50 ohms
Power Handling	≤10W
Temperature	-30°C to+60°C
Connectors	N-Female / N-Male
Waterproof	IP66
Surface Finish	Black Paint
Dimensions (w/o N connectors)	128 x 74 x 48 mm

The dimensions of the 920-925MHz cavity filter are detailed hereafter:

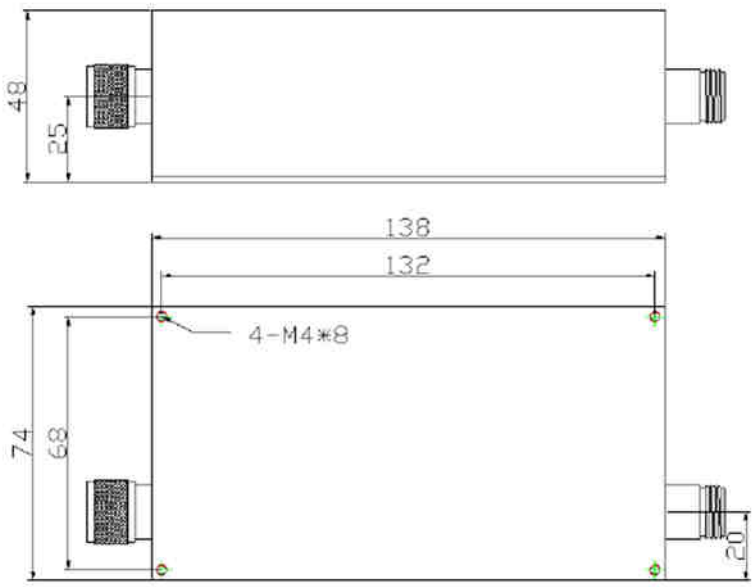

Figure 34 : Dimensions of the 920-925MHz cavity filter

The frequency response of 862-867MHz cavity filter is as follows:

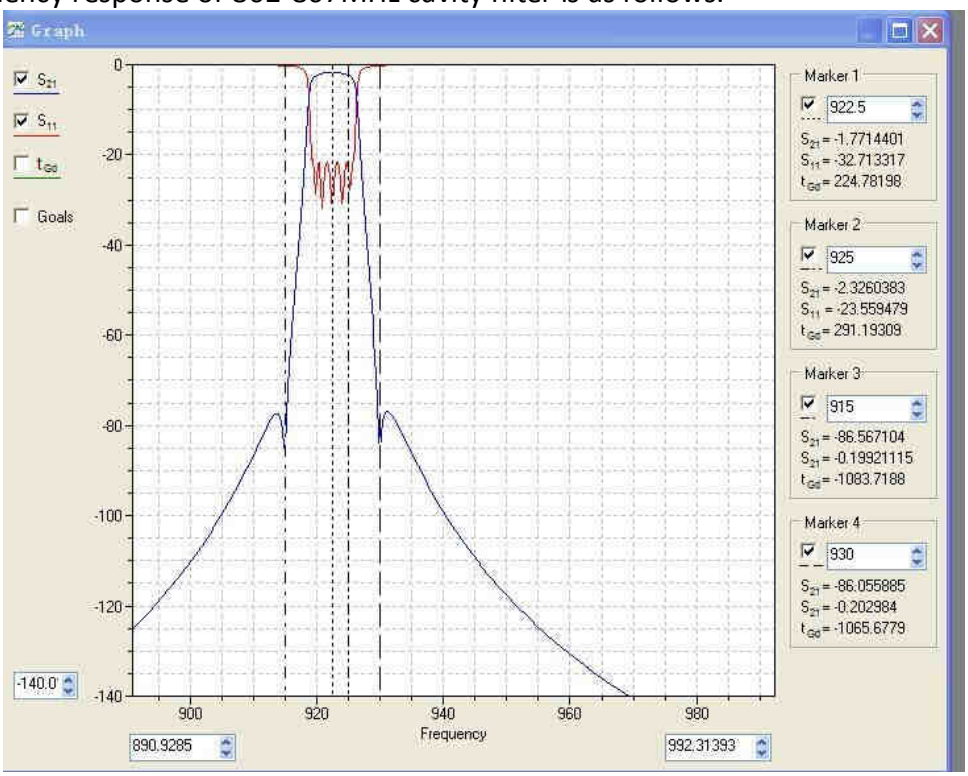

Figure 35 : Frequency response of the 920-925MHz cavity filter

1.7.4 GNSS and WAN antennas

1.7.4.1 GNSS antenna

The GNSS antenna is required for the Wirnet iBTS standard casing only, when featuring a "CPU module".
The Wirnet iBTS Compact embeds a GNSS/LTE internal antenna detailed in §1.7.4.3 and therefore does not require the GNSS antenna.

The GNSS antenna characteristics are detailed in the following table:

Characteristics	Detail	Specification
Frequency range		1572 - 1606 MHz
Antenna peak gain		3dBic
Typical VSWR		<2.0:1
Impedance		50 ohms
Polarization		RHCP
Noise figure		1.5dB typ
Total gain		27dB typ
Out of band rejection		30dB min at +/-100MHz
IIP3		-10dBm
IP1dB		-15dBm
Input voltage		3.0V - 5.5V
Current drain		11mA at 3V
Cable length		5 m
Cable type		RG58
Connector type		N male
Dimensions (DxH)	Diameter and Height	80 mm (D) x 42 mm (H)
Operating temperature		-40°C to +85°C
Wind resistance		> 200 km/h
IP rating		IP66

Note: a dome antenna bracket is provided with the GNSS antenna, allowing wall mounting, pole mounting and metallic strapping. Screws, nuts, U-bolt and metallic strapping are not provided by KERLINK.

1.7.4.2 LTE antenna

The LTE antenna is required for the Wirnet iBTS standard casing only, when featuring a "WAN module".
The Wirnet iBTS Compact embeds a GNSS/LTE internal antenna detailed in §1.7.4.3 and therefore does not require the LTE antenna.

The LTE antenna characteristics are detailed in the following table:

Characteristics	Detail	Specification
Frequency range	Band 1	698-960 MHz
	Band 2	1700-2700MHz
Peak gain	Band 1	4dBi
	Band 2	2dBi
Typical VSWR	Band 1 & 2	<2.4:1
Impedance		50 ohms
Polarization		Linear, Vertical
Radiation pattern		Omnidirectional
Type		No ground plane required
Power handling		10W min
Cable length		5 m
Cable type		RG58
Connector type		N male
Dimensions (DxH)	Diameter and Height	80 mm (D) x 42 mm (H)
Operating temperature		-40°C to +85°C
Wind resistance		> 200 km/h
IP rating		IP66

Note: a dome antenna bracket is provided with the LTE antenna, allowing wall mounting, pole mounting and metallic strapping. Screws, nuts, U-bolt and metallic strapping are not provided by KERLINK.

1.7.4.3 GNSS/LTE magnetic antenna

The GNSS/LTE magnetic antenna can be used with the Wirnet iBTS Compact casing only.
It is not required for the Wirnet iBTS standard casing.

The GNSS/LTE magnetic antenna characteristics are detailed in the following table:

Characteristics	Description	Detail	Specification
LTE antenna	Frequency range	Band 1	698-960 MHz
		Band 2	1700-2700MHz
	Peak gain	Band 1	1dBi
		Band 2	0dBi
	Typical VSWR	Band 1 & 2	<2.0:1
	Impedance		50 ohms
	Polarization		Vertical
	Radiation pattern		Omnidirectional
	Type		No ground plane required

GNSS antenna	Power handling	10W
	Frequency range	1574 - 1606 MHz
	Peak gain	3dBic
	Typical VSWR	<2.0:1
	Impedance	50 ohms
	Polarization	RHCP
	Type	Passive No ground plane required
	DC block	Yes
Mechanical	Mounting type	Magnetic mount
	Cable length (x2)*	15 cm
	Cable type (x2)	RG174
	Connector type (x2)*	SMA male, right angle
	Dimensions (DxH)	63 mm (D) x 16 mm (H)
	Operating temperature	-40°C to +85°C

Note: the antenna must be mounted on the internal GNSS/LTE bracket, a mechanical part provided as standard with the Wirnet iBTS Compact (see §1.3.1 and Figure 8).

1.7.5 Cables

The Wirnet iBTS are delivered with all required cables to start and operate the gateway, except the power supplies cables:

- RJ45 PoE cable is not provided by KERLINK
- Auxiliary power supply cable is not provided by KERLINK

The LoRa antennas are provided with 1m coaxial cable.
Specific installations may require deporting the LoRa antenna further. Extension coaxial cables are not provided by KERLINK.

The GNSS and LTE antennas are provided with 5m coaxial cable.
Specific installations may require deporting the GNSS antenna or LTE antenna further.
Deporting the GNSS antenna may be required to have a better sky view to optimize the reception of the satellites.
Deporting the LTE antenna may be required to optimize the LTE reception or improve isolation with other radio equipment's on the site.
Extension coaxial cables are not provided by KERLINK.

1.7.5.1 RJ45 PoE cable

This cable is not provided with the Wirnet iBTS.
It neither can be delivered as an accessory.

KERLINK recommends using a PoE cable with the following characteristics:

Characteristics	Specification
Category	6A
Shielding	STP (U/FTP) or SSTP (S/FTP)
Section conductors	AWG26 or bigger
External jacket	LSZH or PUR
Maximum length	100 meters
Operating temperature range	-20°C to +60°C

KERLINK recommends the following reference:
TELEGARTNER AMJ 500 U/FTP 4x2x0.55 LSZH Cat. 6A IEC 600332-1

The Ethernet cable must be provided with two RJ45 T 568A (or 568B) plugs on each side:

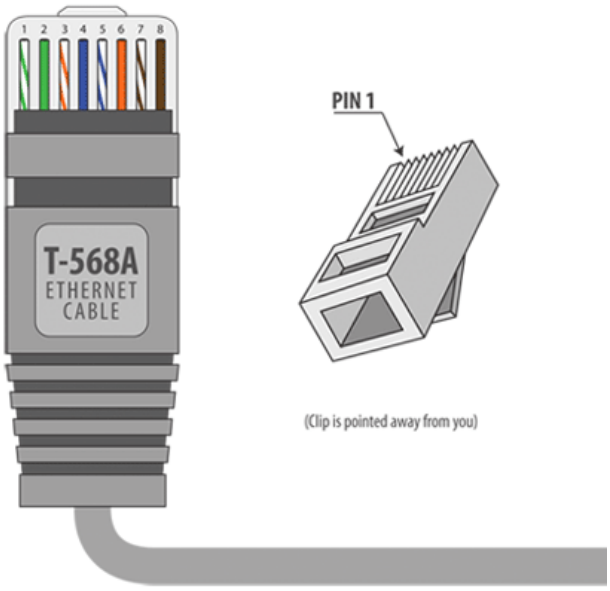

Figure 36 :RJ45 T-568A plug

1.7.5.2 Earthing cables

Several earthing cables, wires or tapes are required to connect the installation and the materials to earth for lighting immunity and electrical security.
The earthing cables are detailed hereafter with recommended wires and sections:

Cable description	Technical characteristics
Earthing of the Wirnet iBTS mounting kit	25mm^2, copper
Earthing of the antenna brackets (LoRa antenna, GNSS antenna, LTE antenna)	25mm^2, copper

Earthing of the RF coaxial surge protection	16mm^2, copper
Earthing of the Ethernet surge protection	16mm^2, copper
Earthing of the outdoor PoE injector	16mm^2, copper

Note: the earthing cables are not provided by KERLINK

1.7.6 Surge protections

In harsh environment, additional protections may be used to improve lightning immunity.
The Wirnet iBTS is not warranted by KERLINK in case of deterioration due to lighting.
KERLINK recommends adding surge protection, especially in high keraunic levels areas.

1.7.6.1 RF coaxial surge protection

For the antenna links (LoRa, GNSS, LTE), KERLINK recommends the P8AX09-6G-N/MF series from CITEL.
Protections must be installed in accordance to its own specifications.

The following picture describes the RF coaxial surge protection:

Figure 37 : P8AX Citel

Note: the RF coaxial surge protector must be connected to the Lightning Protection System down conductor, connecting the lighting rod to the earth. No cables are provided by KERLINK for that purpose.

1.7.6.2 Indoor Ethernet surge protection

For the Ethernet link, KERLINK recommends the MJ8-POE-A reference from CITEL.
This surge protection must be installed indoor, according to its own specifications.

The following picture describes the PoE surge protection:

Figure 38 : MJ8-POE-B Citel

Note: the PoE surge protector must be connected to the earth. No cables are provided by KERLINK for that purpose. See §1.7.5.2 for additional information.

1.7.6.3 Outdoor Ethernet surge protection

In case the Ethernet surge protection cannot be installed indoor, then KERLINK recommends the PD-OUT/SP11 reference from Microsemi.
This surge protection can be installed indoor, according to its own specifications.

The main characteristics of the PoE surge protection are:

Characteristics	Specification
Network	POE and Gigabit Ethernet, High POE (95W)
Technology	Clamping diode
SPD configuration	4 pairs + shielded
Connection to Network	RJ45 shielded connector female input/output
Format	Metallic box with connectors input/output
Mounting	Wall or pole mount
Operating temperature	-40°C to +85°C
Dimensions	30 x 30 x 190 mm
Weight	270g
Protection rating	IP66
Outdoor application	Yes
Failsafe behavior	Short-circuit
Disconnection indicator	Transmission interrupt
Remote signaling of disconnection	None
Nominal line voltage (Un)	48 Vdc

Max. DC operating voltage (Uc)	60 Vdc
Max. line current (IL)	2A
Protection level (Up)	500V
Nominal discharge voltage 8/20µs	10 kV
Impulse current **2 x 10/350µs Test - D1 Category (Iimp)**	100 A
Nominal discharge current **8/20µs Test x 10 - C2 Category (In)**	5 kA
Max data rate	1000 Mbps
Certifications	IEC 61643-21 / EN 61643-21 GR1089 ITU-T K.45 UL497B IEEE 802-3ab/3at

The following picture describes the PoE surge protection:

Figure 39 : PD-OUT/SP11 Microsemi

Note: the PoE surge protector must be connected to the earth. No cables are provided by KERLINK for that purpose. See §1.7.5.2 for additional information.

1.7.7 Mounting kits

1.7.7.1 Notched V-shaped pole mounting kit

The notched V-shaped pole mounting kit includes a notched V shaped plate and a U bolt with 2 nuts.
This mounting kit can be used in conjunction with the dome antenna brackets for pole mounting (see §1.7.7.3). The maximum diameter of the pole is 70mm.

The dimensions of the notched V shaped plate part are detailed hereafter:

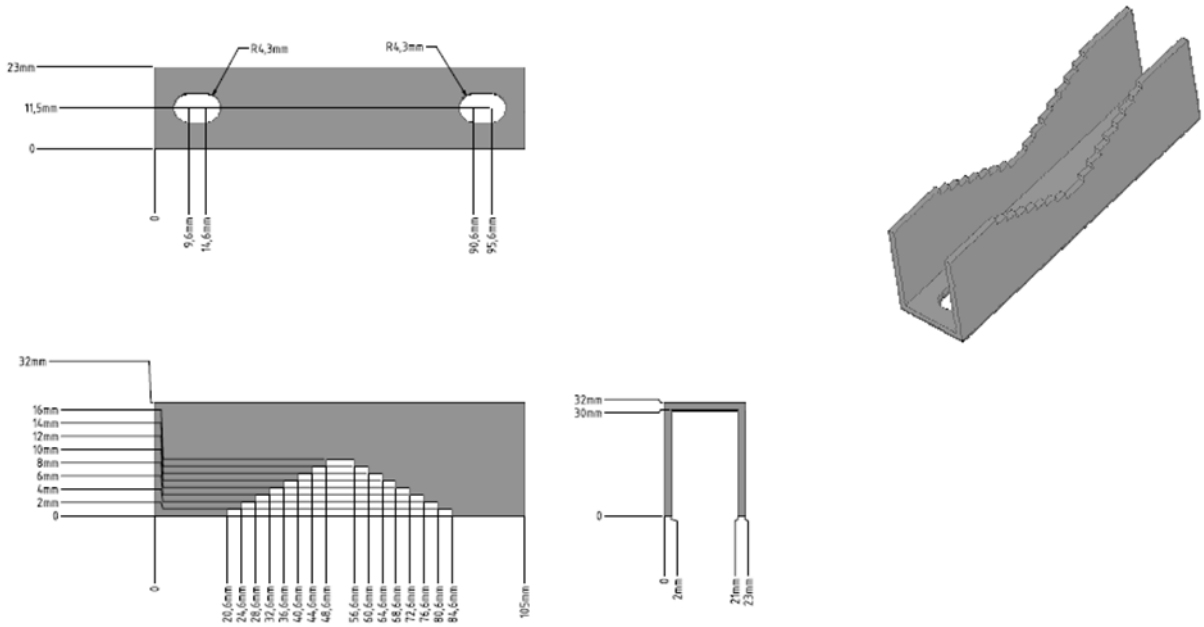

Figure 40 : Dimensions of the notched V shaped plate

1.7.7.2 Universal antenna bracket

The universal antenna bracket is used with the following antennas:

- 868MHz, 3dBi omnidirectional (see §1.7.2.1).
- 915MHz, 3dBi omnidirectional (see §1.7.2.2).
- 915MHz, 6dBi omnidirectional, except FT-RF antenna (see §1.7.2.3).

The universal antenna bracket is presented hereafter:

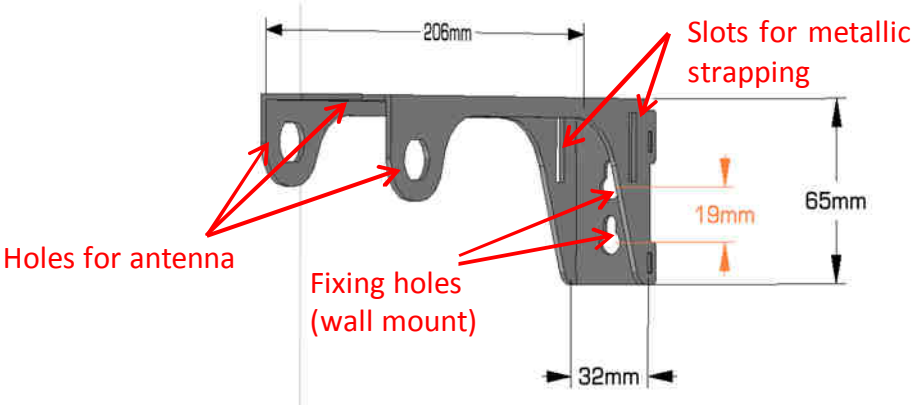

Figure 41 : Universal antenna bracket dimensions

The universal antenna bracket has 3 holes dedicated to the LoRa antenna N connector. The bracket can be then oriented in 3 different positions without compromising the antenna position.
The universal antenna bracket can be mounted:

- On a wall: use in this case two M4 screws separated by 19mm.
- On a pole: use metallic strapping through the two 5mm x 25mm slots.
- On the compact casing mounting kit, with 2 x M8 bolts and screws.

1.7.7.3 Dome antenna bracket

The dome antenna bracket is used for the following antennas:

- GNSS antenna (see §1.7.4.1)
- LTE antenna (see §1.7.4.2)
- GNSS/LTE combo antenna (see §1.7.4.3)

The dome antenna bracket is presented hereafter:

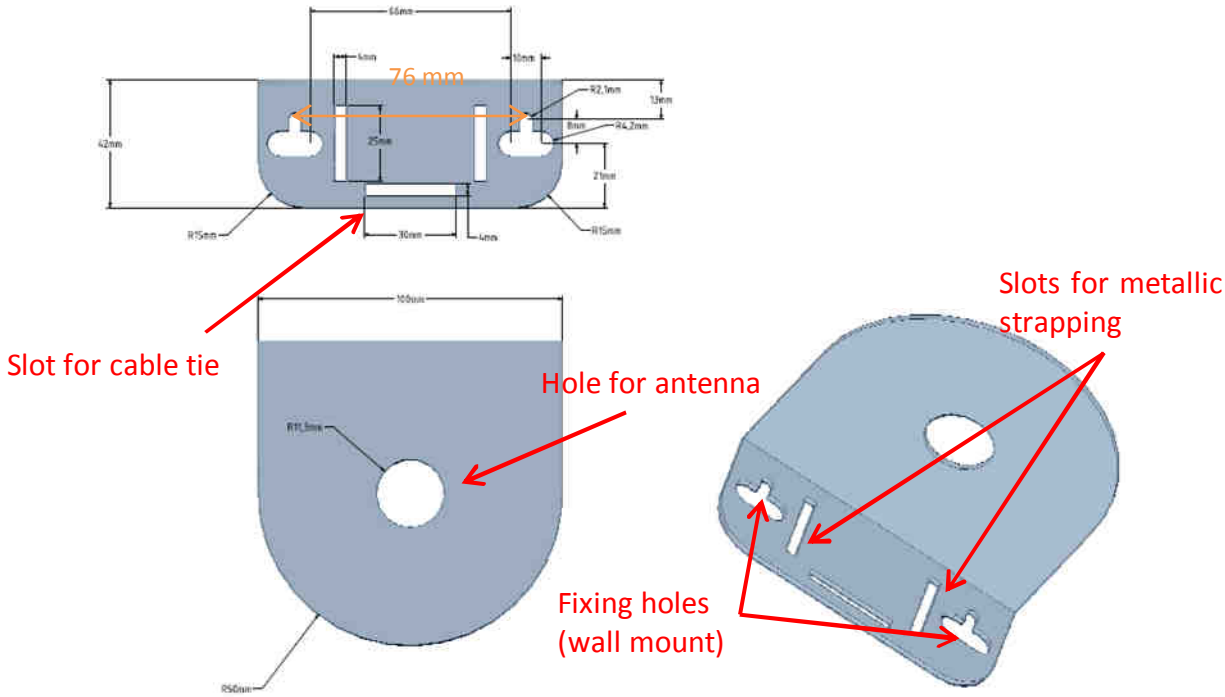

Figure 42 : Dome antenna bracket dimensions

The dome antenna bracket has a single hole dedicated to the LTE and / or GPS M22 screw.
The dome antenna bracket can be mounted:

- On a wall: use in this case 2 x M4 screws separated by 76mm (see figure above).
- On a pole: use metallic strapping through the two 4mm x 25mm slots (see figure above).
- On a pole: alternate option is to use the “notched V shaped plate and a U-bolt” as detailed in §1.7.7.1. The two parts are presented on the figure below. The maximum diameter of the pole is 60mm.

Another slot is available. It can be used for cable ties to tighten the RF coaxial cable to the antenna bracket.

Note 1: the M4 screws, the metallic strapping are not provided by KERLINK.

Note 2: the cables ties are not provided by KERLINK.

Note 3: the notched V shaped plate and a U-bolt can be provided by KERLINK as accessories (see §1.7.7.1).

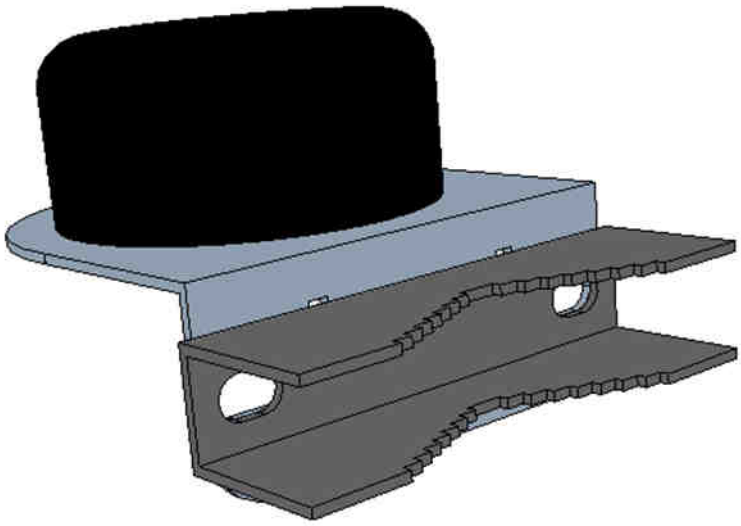

Figure 43 : Dome antenna bracket with notched V shaped bolt

1.7.8 Debug tool

The Wirnet iBTS has a proprietary serial debug interface named DEBUG available on the front panel of the CPU module.
This debug interface is intended to be used by authorized and qualified personnel only.
The WIRMA2 Debug tool is intended to be connected to the debug interface. It is mainly a simple UART to USB converter.

The main characteristics of the Wirma2 debug tool are:

Characteristics	Specification
UART Interface	RJ45 female
	3.3V internal LDO
	Up to 1Mb/s
USB2.0 interface	USB 2.0 A type
	USB Self Bus Powered at 5V
	Full Speed (12Mb/s)
Operating temperature range	0°C to +60°C
Chipset	FT232BL (FTDI)

The debug tool must be used with an Ethernet cable and a USB2.0 type A to type B male cable. They can be provided by KERLINK as options as detailed in §6.
The USB cable must be connected to a computer where must be installed HyperTerminal or Teraterm to visualize the traces.

The following picture describes the Wirma2 debug tool connected to the CPU module:

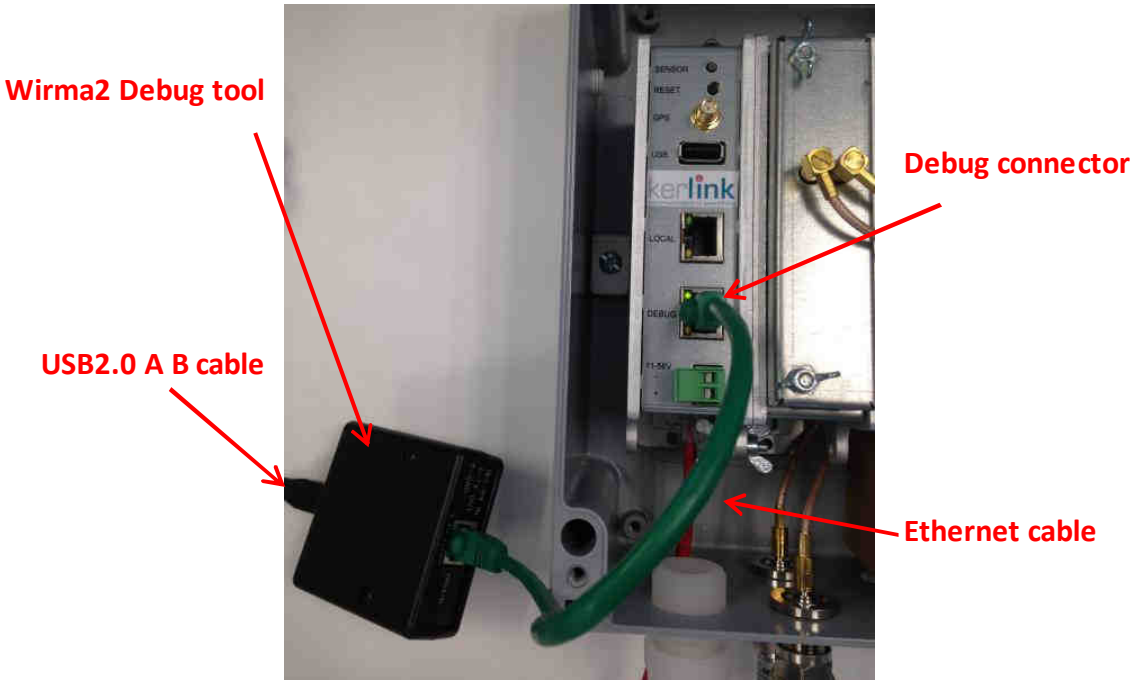

Figure 44 : WIRMA2 Debug Tool connected to the CPU module

2. Regulations

2.1 Wirnet iBTS 868

2.1.1 Europe / CE

Wirnet iBTS 868 complies with requirements listed in the article 3 of the R&TTE 1999/5/EC Directive until June 15th 2016 and the RED 2014/53/EU directive from June 16th 2016:

1. Electromagnetic compatibility (article 3.1-b of the R&TTE Directive)

   Applied standard(s): EN 301 489-1 issue 1.9.2
   EN 301 489-3 issue 1.4.1
   EN 301 489-7 issue 1.3.1
   EN 301 489-19 issue 1.2.1

2. Efficient use of the radio frequency spectrum (article 3.2 of the R&TTE Directive)

   Applied standard(s):
   EN 301 511 issue 9.0.2
   EN 301 908 issue 6.2.1
   EN 300 440-1 issue 1.6.1
   EN 300 440-2 issue 1.4.1
   EN 300 220-1 issue 2.4.1
   EN 300 220-2 issue 2.4.1

3. Safety (article 3.1-a of the R&TTE Directive)

   Applied standard(s): EN 60 950-1 (Ed. 2006/A11 : 2009/A1 : 2010/A12:2011)

4. Magnetic field exposure

   Applied standard(s): EN 50 385 Ed. 2002
   EN 62 479 Ed. 2010

The power supply of the Wirnet iBTS 868 must be a limited power source.

The Wirnet iBTS 868 is considered as a category 2 receiver according to the EN 300 220-1.
The Wirnet iBTS 868 has CE marking.

In Europe, the Wirnet iBTS 868 station must comply with the ERC 70-3 requirements regarding duty cycle and maximum EIRP. They are summarized in the following table:

ERC 70-03 Band	Frequency (MHz)	Power	Duty cycle
h1.3	863-865	14dBm ERP	0,1%
h1.3	865-868	14dBm ERP	1%
h1.4	868-868,6	14dBm ERP	1%
h1.5	868,7-869,2	14dBm ERP	0,1%

h1.6	869,4-869,65	27dBm ERP	10%
h1.7	869,7-870	14dBm ERP	1%
h2	870-873	14dBm ERP	0,1%
h2.1	870-873	14dBm ERP	1%
Annex2/c	870-873	27dBm ERP	2,5%

If the LoRa antenna is changed, the output power must be adjusted to take into account the gain of the antenna to not overrule the ERC 70-3 regulation.
Be careful, some countries in Europe may have specific frequency range, EIRP and duty cycles regulations. Check the local regulations before installing and commissioning the Wirnet iBTS 868.
For other countries, outside Europe, check the frequency range, the maximum EIRP and duty cycle allowed.

2.1.2 India

-Type approval and ISI Certification required-

In India, the Wirnet iBTS 868 can be used with the following limitations:

Item	Specification
Frequency range	865-867MHz
Max EIRP	4W
Max conducted power with 6dBi antenna	1W
Channelization	200KHz

The LoRaWAN specification defined for Europe (863-870MHz band) can be reused for India, but with the following limitations

- 125KHz BW only,
- Default channels and JointReq channels (868.1, 868.3 and 868.5MHz) are not available.

Therefore a new definition of the channels must be operated.
Ten channel are available such as 865.1MHz+n*0.2 (0<=n<=9).
Eight channels among these ten must be selected.
KERLINK recommends removing the first one and the last one in order to improve the band edge spectrum.
The recommended channels are then: 865.3MHz+n*0.2 (0<=n<=7).

Note: An 862-867MHz cavity filter may be required in India to avoid saturation and desensitization of the LoRa receiver due to co-located LTE850 or CDMA800 base stations. This cavity filter is described in §1.7.3.1.

2.1.3 South Africa

-ICASA Type approval required-

In South-Africa, the Wirnet iBTS 868 can be used with the following limitations:

Frequency (MHz)	Power	Duty cycle
868-868,6	14dBm ERP	1%
868,7-869,2	14dBm ERP	0,1%
869,4-869,65	27dBm ERP	10%
869,7-870	7dBm ERP	100%

The channel arrangement is the same as in Europe, according to the LoRaWAN specification.

2.1.4 Saudi Arabia

-CITC approval required-

In Saudi-Arabia, the Wirnet iBTS 868 can be used with the following limitations:

Frequency (MHz)	Power
865-868	14dBm ERP
868-868,6	14dBm ERP
868,7-869,2	14dBm ERP
869,4-869,65	27dBm ERP
869,7-870	7dBm ERP

The channel arrangement is the same as in Europe, according to the LoRaWAN specification.

2.1.5 United Arab Emirates

-TRA Type approval required-

In United Arab Emirates, the Wirnet iBTS 868 can be used with the following limitations:

Frequency (MHz)	Power
865-870	17dBm EIRP*
870-873	10dBm EIRP

*: can be increased to 20dBm EIRP with authorization of the TRA.

The channel arrangement is the same as in Europe, according to the LoRaWAN specification.

2.1.6 Russia

-Minsvyaz approval and EAC marking required-

In Russia, the Wirnet iBTS 868 can be used with the following limitations:

Frequency (MHz)	Power	Duty cycle
864-865	14dBm ERP	1%
868.7-869.2	14dBm ERP	N/A

The channel arrangement is the same as in Europe, according to the LoRaWAN specification, except default channels and JointReq channels (868.1, 868.3 and 868.5MHz) are not available.

2.2 Wirnet iBTS 915

The Wirnet iBTS 915 is compliant to:

- IEC 60950 -1

The power supply of the Wirnet iBTS 915 must be a limited power source.

The Wirnet iBTS 915 is also compliant to both FCC and IC regulations.
Applicable documents:

- CFR 47 FCC Part 15
  - FCC 47 CFR Part 15 : 2014 - Part 15- Radio frequency devices
  - FCC PART 15.247 - Operation within the bands 902–928 MHz, 2400–2483.5 MHz, and 5725–5850 MHz (frequency hopping and digitally modulated)
    - FCC Part 15.207 conducted emissions on AC mains in the band 150kHz – 30MHz
    - FCC Part 15.247 intentional radiated emissions
    - FCC Part 15.215 Additional provisions to the general radiated emissions limitations
- RSS 247
  - RSS-Gen – Issue 4, November 2014- General requirements and Information for the Certification of radio Apparatus
  - RSS-247 Issue 1, May 2015 - Digital Transmission Systems (DTSS), Frequency Hopping Systems (FHSS) and License-Exempt Local Area Network (LE-LAN) Devices

The associated FCC and IC identifiers of the Wirnet iBTS 915 are:

FCC ID : 2AFYS-KLK915IBTS
IC : 20637-KLK915IBTS
Model : WIRNET iBTS 915
Contains FCCID : N7NMC7355
Contient IC : 2417C-MC7355
Model : MC7355

The associated FCC and IC identifiers of the Wirnet iBTS Compact 915 are:

FCC ID : 2AFYS-KLK915IBTSC
IC : 20637-KLK915IBTSC
Model : WIRNET iBTS Compact 915
Contains FCCID : N7NMC7355
Contient IC : 2417C-MC7355
Model : MC7355

Some conditions have to be respected to maintain the FCC and IC compliance of the devices in USA and Canada. They are detailed in the following paragraphs.
For others countries, check the specific regulations regarding maximum EIRP and duty cycle allowed.

2.2.1 USA / FCC

As stated by the external sticker on the enclosure, “This device complies with Part 15 of the FCC Rules. Operation is subject to the following two conditions: (1) this device may not cause harmful interference, and (2) this device must accept any interference received, including interference that may cause undesired operation.”
Changes or modifications not expressly approved by the party responsible for compliance could void the user's authority to operate the equipment.

This equipment has been tested and found to comply with the limits for a Class A digital device, pursuant to part 15 of the FCC Rules. These limits are designed to provide reasonable protection against harmful interference when the equipment is operated in a commercial environment. This equipment generates, uses, and can radiate radio frequency energy and, if not installed and used in accordance with the instruction manual, may cause harmful interference to radio communications. Operation of this equipment in a residential area is likely to cause harmful interference in which case the user will be required to correct the interference at his own expense.

This device must be professionally installed.

Also, some specific recommendations for exposure to magnetic fields must be followed:
This equipment complies with FCC's radiation exposure limits set forth for an uncontrolled environment under the following conditions:

1. This equipment should be installed and operated such that a minimum separation distance of 20 cm is maintained between the radiator (antenna) and user's/nearby person's body at all times.
2. This transmitter must not be co-located or operating in conjunction with any other antenna or transmitter.

2.2.2 Canada / IC

This device complies with Industry Canada's license-exempt RSSs.
Operation is subject to the following two conditions:

1. This device may not cause harmful interference, and
2. This device must accept any interference received, including interference that may cause undesired operation of the device.

Le présent appareil est conforme aux CNR d'Industrie Canada applicables aux appareils radio exempts de licence.
L'exploitation est autorisée aux deux conditions suivantes:

1. *L'appareil ne doit pas produire de brouillage;*
2. *l'utilisateur de l'appareil doit accepter tout brouillage radioélectrique subi, même si le brouillage est susceptible d'en compromettre le fonctionnement.*

Under Industry Canada regulations, this radio transmitter may only operate using an antenna of a type and maximum (or lesser) gain approved for the transmitter by Industry Canada. To reduce potential radio interference to other users, that antenna type and its gain should be so chosen that the equivalent isotropically radiated power (EIRP) is not more than that necessary for successful communication.

This radio transmitter has been approved by Industry Canada to operate with the antenna types listed as accessories with the maximum permissible gain and required antenna impedance for each antenna type indicated. Antenna types not included in this list, having a gain greater than the maximum gain indicated for that type, are strictly prohibited for use with the device.

This equipment should be installed and operated such that a minimum separation distance of 20 cm is maintained between the radiator (antenna) and user's/nearby person's body at all times.

The radio transmitter has been approved by Industry Canada to operate with a maximum duty cycle of 40% to not overrule the 2.784 W/m2 RF Field Strength Limits for Devices. The duty cycle, in normal conditions, is far below this limit. Do not operate the Wirnet iBTS 915 out of the 40% duty cycle limit.

2.3 Wirnet iBTS 923

The Wirnet iBTS 923 is compliant to:

- IEC 60950-1
- CENELEC EN 60 950-1 (Ed. 2006/A11 : 2009/A1 : 2010/A12:2011)
- AS/NZS 60950.1 : 2003

The Wirnet iBTS 923 is also compliant to both FCC and CE regulations.
Applicable documents:

- CFR 47 FCC Part 15 :
  - FCC 47 CFR Part 15 : 2014 - Part 15- Radio frequency devices
  - FCC PART 15.247 - Operation within the bands 902–928 MHz, 2400–2483.5 MHz, and 5725–5850 MHz (frequency hopping and digitally modulated)
    - FCC Part 15.207 conducted emissions on AC mains in the band 150kHz – 30MHz
    - FCC Part 15.247 intentional radiated emissions
    - FCC Part 15.215 Additional provisions to the general radiated emissions limitations
- Article 3.2 of the R&TTE Directive :
  Applied standard(s):
  - EN 300 220-1, issue 2.4.1
  - EN 300 220-2, issue 2.4.1

  The Wirnet iBTS 923 is considered as a category 2 receiver according to the EN 300 220-1.
- AS/NZS 4268 2012 + A1 : 2013 : Radio equipment and systems – Short range devices – Limits and methods of measurement
- ARIB STD-T108 - 920MHz-Band Telemeter, Telecontrol and Data Transmission Radio Equipment
- Clause 2, Article 58-2 of Radio Waves Act (Republic of Korea)
- IDA Technical Specifications for Short Range Devices (IDA TS SRD) – Issue 1 Rev 7, April 2013

Note 2:
The power supply of the Wirnet iBTS 923 must be a limited power source.

Note 2:
Depending on the countries, check the specific regulations applying, especially regarding frequency range, maximum EIRP, duty cycle allowed, maximum transmit duration, carrier sense mandatory or not, etc …
Some specific rules are detailed hereafter for specific countries.

Note 3:
All proposed channel plans detailed in §2.3 use the FCC LoRaWAN implementation just changing actual frequencies and number of UL/DL channels.

- Upstream channel plan is fixed
- RX1 downstream channel and Data Rate are function of Upstream channel and Data Rate
- RX2 downstream channel and Data Rate are fixed but configurable

2.3.1 Australia

-ACMA declaration of conformity and RCM marking required-

In Australia, the Wirnet iBTS 923 can be used with the following limitations:

Item	Specification
Frequency range	915-928MHz
Max EIRP	1W (30dBm)
Max conducted power with 6dBi antenna	24dBm
Max conducted power with 3dBi antenna	27dBm

The frequency plan and channel allocation is defined in the very last release of LoRaWAN specification for Australia.
Its usage summarized hereafter:

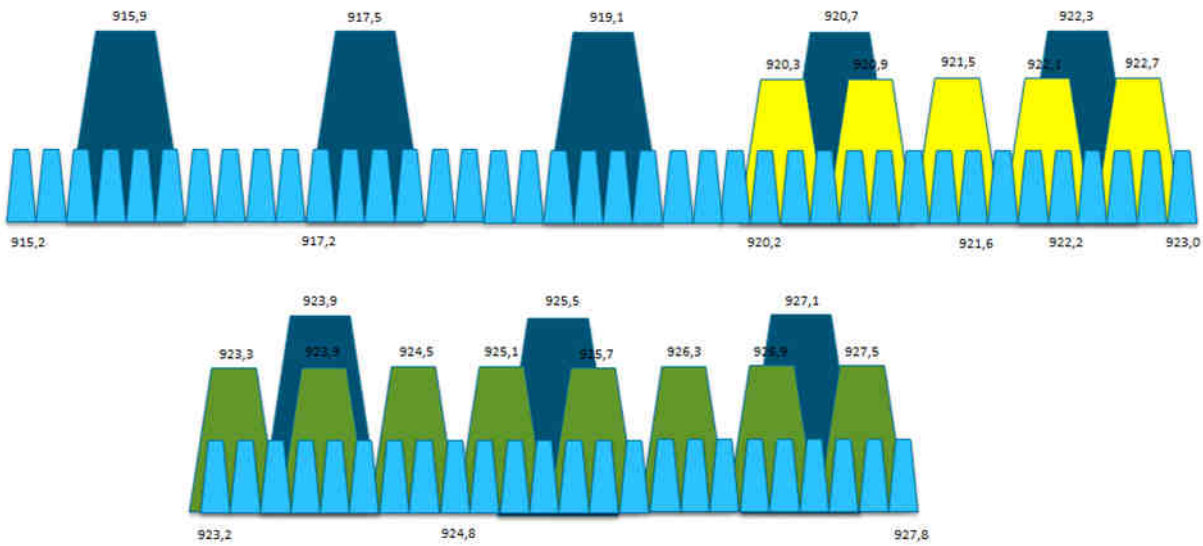

Figure 45 : Channels allocation in Australia

Note:
In the above figure:

- Upstream channels are in blue (64 channels, 200KHz spacing, 125KHz BW + 8 channels, 1600KHz spacing, 500KHz BW)
- 125KHz upstream channels are limited from SF7 to SF10 to meet 400ms maximum frame length
- Downstream channels are in green (8 channels, 600 KHz spacing, 500KHz BW)
- Unused channels are in yellow

2.3.2 Hong-Kong

-Voluntary Certification Scheme required to HKTEC-

In Hong-Kong, the Wirnet iBTS 923 can be used with the following limitations:

Item	Specification
Frequency range	920-925MHz
Max EIRP	26dBm
Max conducted power with 6dBi antenna	30dBm

The frequency plan and channel allocation is not yet defined in the LoRaWAN specification for Hong-Kong.
KERLINK recommends the following allocation:

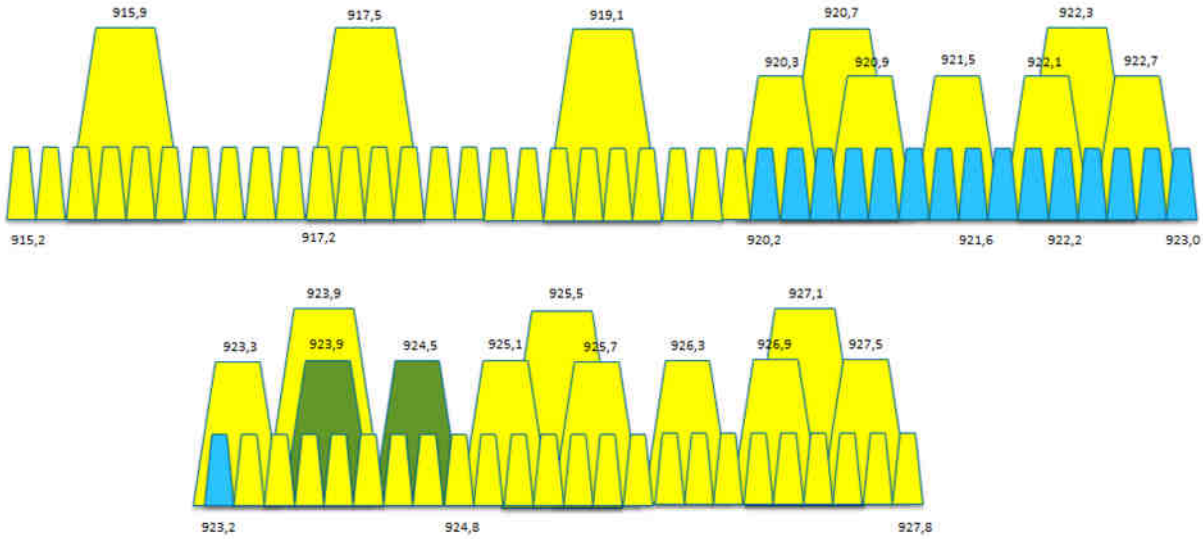

Figure 46 : Channels allocation proposal in Singapore

Note 1:
In the above figure:

- Upstream channels are in blue (16 channels, 200KHz spacing, 125KHz BW)

- Downstream channels are in green (2 channels, 600 KHz spacing, 500KHz BW)
- Unused channels are in yellow

The channels allocation can be organized differently if needed.

Note 2: A 920-925MHz cavity filter may be required in Hong-Kong to avoid saturation and desensitization of the LoRa receiver due to co-located EGSM900 base stations. This cavity filter is described in §1.7.3.2.

2.3.3 Korea (Republic of)

-RRA Certification and KC label required-

The iBTS station 923 is compliant the Clause 2, Article 58-2 of Radio Waves Act.
In Republic of Korea, the Wirnet iBTS 923 can be used with the following limitations:

Item	Specification
Frequency range	917-923.5MHz
Max EIRP	10mW (10dBm)
Max conducted power with 6dBi antenna	4dBm
Max conducted power with 3dBi antenna	7dBm
Carrier sense (LBT)	5ms / -65dBm
Transmit duration	< 4s
Pause duration	> 50 ms
Duty cycle	<2% in 20 s duration

The frequency plan and channel allocation is not yet defined in the LoRaWAN specification for Republic of Korea.
KERLINK recommends the following allocation:

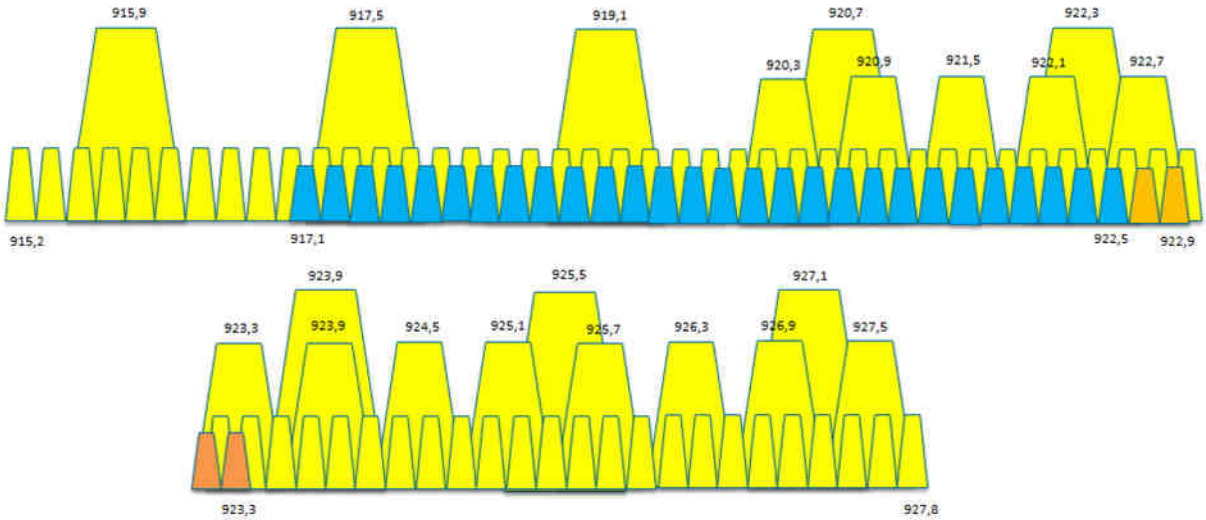

Figure 47 : Channels allocation proposal in Korea

Note:
In the above figure:

- Upstream channels are in blue and orange (32 channels, 200KHz spacing, 125KHz BW)
- Downstream channels are in orange (4 channels, 200 KHz spacing, 125KHz BW)
- Unused channels are in yellow
- Channels are offset by 100KHz compared to other countries due to Korean regulations constraints

The channels allocation can be organized differently if needed.

2.3.4 New-Zealand

-Declaration of conformity, R-NZ marking and Telepermit certification required-

In New-Zealand, the Wirnet iBTS 923 can be used with the following limitations:

Item	Specification
Frequency range	921-928 MHz all type of SRD
Frequency range	915-921 MHz for telemetry only
Max EIRP	1W (30dBm)
Max conducted power with 6dBi antenna	24dBm
Max conducted power with 3dBi antenna	27dBm

The frequency plan and channel allocation is not yet defined in the LoRaWAN specification for New-Zealand.
In case of telemetry application, the full 915-928 MHz band can be used. Therefore, a frequency plan and channel arrangement similar to Australia can be used (see § 2.3.1).
If the application is not dedicated to telemetry, then KERLINK recommends the following allocation:

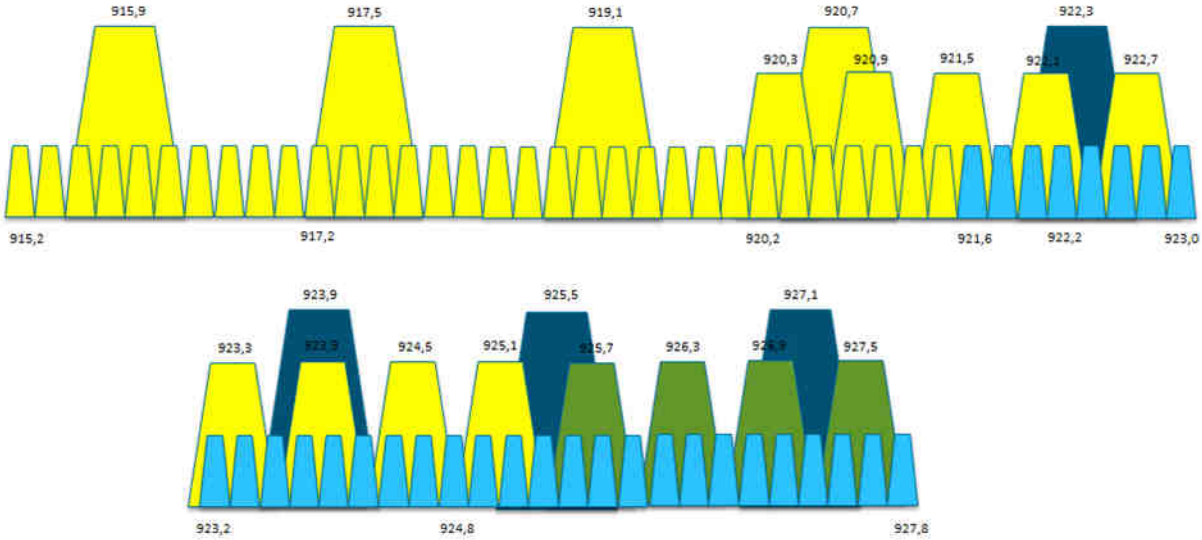

Figure 48 : Channels allocation proposal in New-Zealand

Note:

In the above figure:

- Upstream channels are in blue (32 channels, 200KHz spacing, 125KHz BW + 4 channels, 1600KHz spacing, 500KHz BW)
- 125KHz upstream channels are limited from SF7 to SF10 to meet 400ms maximum frame length
- Downstream channels are in green (4 channels, 600 KHz spacing, 500KHz BW)
- Unused channels are in yellow

The channels allocation can be organized differently if needed.

2.3.5 Singapore

-IDA registration required-

In Singapore, the Wirnet iBTS 923 can be used with the following limitations:

Item	Specification
Frequency range	920-925MHz
Max ERP	500mW
Max EIRP	29dBm
Max conducted power with 6dBi antenna	23dBm

The frequency plan and channel allocation is not yet defined in the LoRaWAN specification for Singapore.

KERLINK recommends the following allocation:

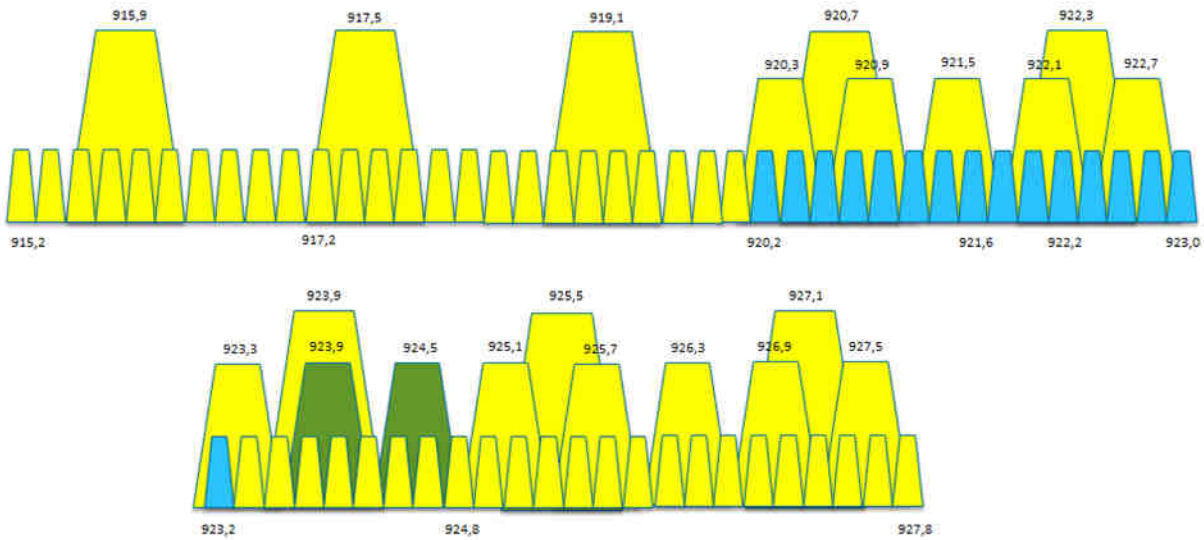

Figure 49 : Channels allocation proposal in Singapore

Note 1:
In the above figure:

- Upstream channels are in blue (16 channels, 200KHz spacing, 125KHz BW)
- Downstream channels are in green (2 channels, 600 KHz spacing, 500KHz BW)
- Unused channels are in yellow

The channels allocation can be organized differently if needed.

Note 2: A 920-925MHz cavity filter may be required in Singapore to avoid saturation and desensitization of the LoRa receiver due to co-located EGSM900 base stations. This cavity filter is described in §1.7.3.2.

2.3.6 Japan

-RCAB certificate and Giteki marking required-

In Japan, the Wirnet iBTS 923 can be used with the following limitations:

Item	Specification
Frequency range 1	920.5-928.1MHz
Frequency range 2 (Rx only)	916.0-916.8MHz
Channelization	200KHz
Max EIRP (920.4-922.2MHz)*	500mW (27dBm)
Max conducted power (920.4-922.2MHz)*	250mW (24dBm)
Max EIRP (922.4-923.4MHz)*	500mW (27dBm)
Max conducted power (922.4-923.4MHz)*	250mW (24dBm)

Max EIRP (922.3-928.1MHz)**	40mW (16dBm)
Max conducted power (922.4-928.0MHz)**	20mW (13dBm)
Carrier sense (LBT)	5ms / -80dBm
Transmit duration (920.4-922.2MHz)	< 4s
Transmit duration (922.4-928.0MHz)	<400ms
Pause duration (920.4-922.2MHz)	> 50 ms
Pause duration (922.4-928.0MHz)	> 10*Tx duration

*: ARIB STD-T108 Convenience Radio Station
**: ARIB STD-T108 Specified low power radio station

The frequency plan and channel allocation is not yet defined in the LoRaWAN specification for Japan.
KERLINK recommends the following allocation:

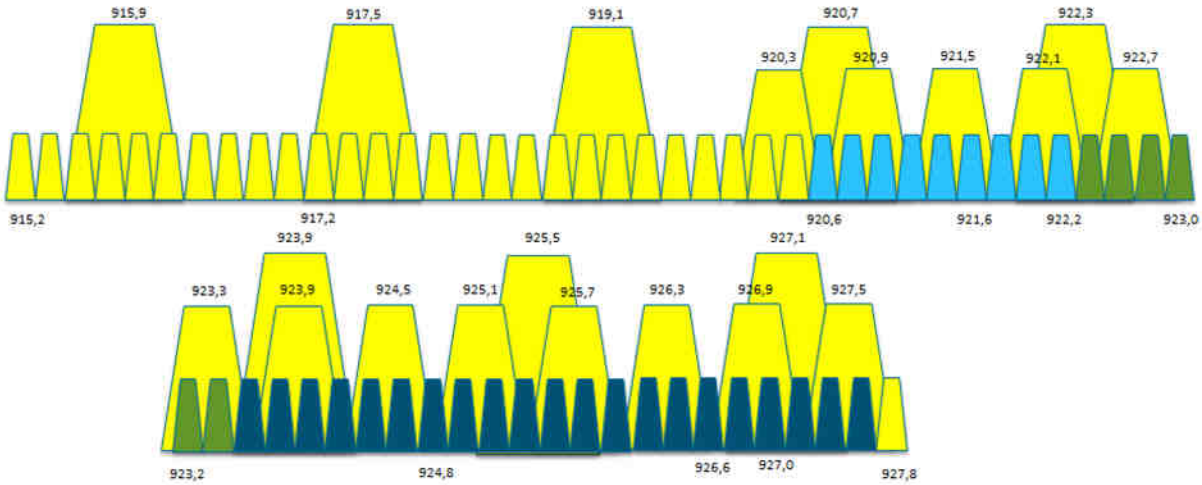

Figure 50 : Channels allocation proposal in Japan

Note:
In the above figure:

- Upstream channels are in blue (30 channels, 200KHz spacing, 125KHz BW)
  - First 9 channels, SF7 to SF12, max frame length=4s
  - Last 21 channels, SF7 to SF10 (reduced payload), max frame length=400ms
- Downstream channels are in green (6 channels, 200 KHz spacing, 125KHz BW)
  - Downstream channel is upstream channel modulo 6 on RX1 and fixed channel on RX2
  - SF7 to SF10 at 500mW EIRP, 400ms frame length
  - Carrier sense makes transmission not fully predictable. Network might have to retry on next slot if carrier is busy
- Unused channels are in yellow

The channels allocation can be organized differently if needed.

3. Key parameters to optimize the radio performance

The installation site is very important and can determinate the coverage area of the Wirnet iBTS. Some keys points are detailed hereafter. They are general rules that must be considered in every installation.
However, each individual installation is a particular case with specific constraints and sometimes with unexpected interferers. The proximity of other emitters, bad electrical installations may cause desensitization of the LoRa receiver.
KERLINK recommends performing spectrum analysis to validate the choice of the installation site. This analysis can be completed with a portable spectrum analyzer for instance.
The Wirnet iBTS has also the ability to perform spectrum analysis through the Web interface as detailed in §0. This analysis is however only possible once the installation is completed.

3.1 Height of the site

A key factor to have an optimized Wirnet iBTS reception is the height of installation site and moreover the height of the LoRa antenna. The Wirnet iBTS gateway must be installed as high as possible to have the better reception and wider coverage area.
The figure below shows the RSSI of the signal (dBm) vs. the distance to the end point (meters) vs. the height of the Wirnet iBTS (4m, 8m, 12m and 30m). Two uses cases are presented: one for a small city configuration (urban area) and one for countryside area.
The propagation model used is based on Hata model.
The frequency is 868MHz in this case but performance and conclusions at 915MHz would be almost identical. The RSSI is the received signal by the Wirnet iBTS. The end point EIRP is assumed to be 25mW. The height of the end point is 1m.

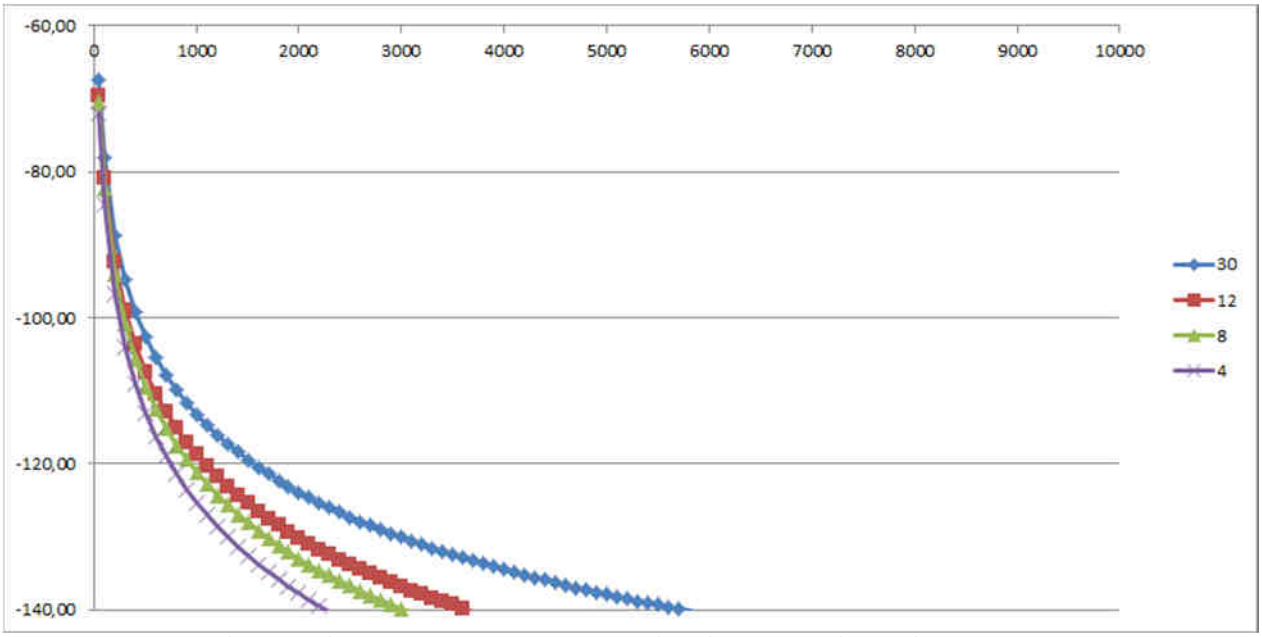

Figure 51 : Urban (small city) Hata propagation model – RSSI (dBm) vs distance (meters) vs height of the antenna

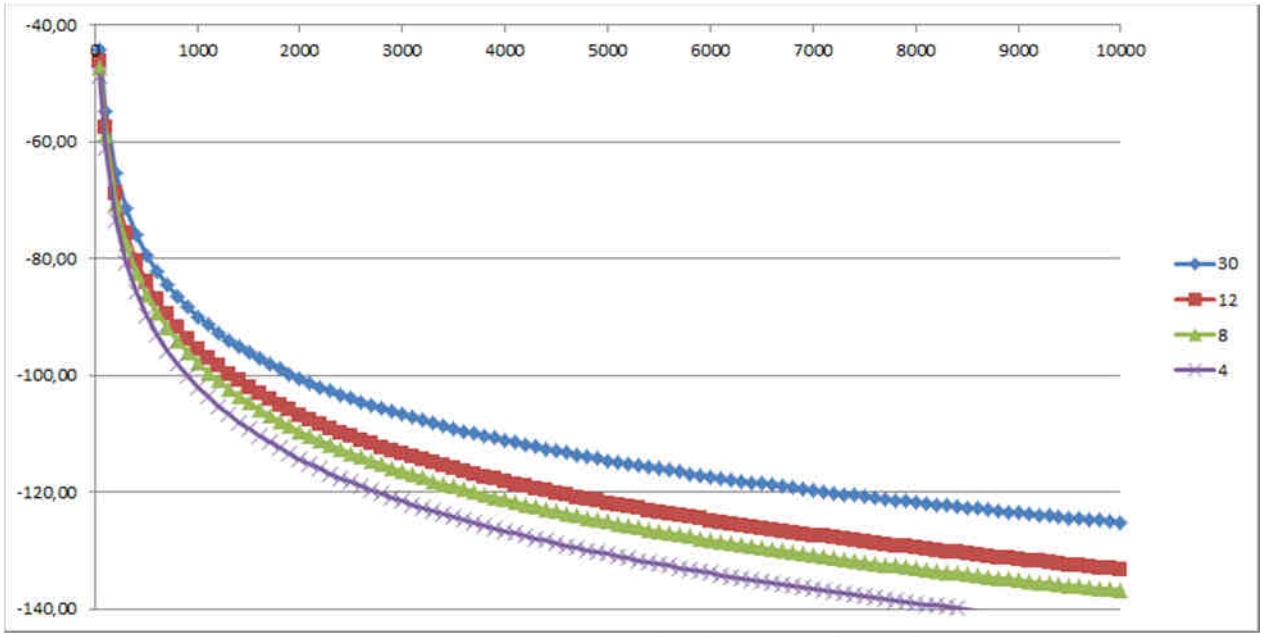

Figure 52 : Rural countryside Hata propagation model - RSSI (dBm) vs distance (meters) vs height of the antenna

What is noticeable is that the coverage distance at a fixed RSSI is doubled depending on the height of the antenna.

3.2 Propagation model vs area type

Predicting the RSSI and more generally the coverage of the Wirnet iBTS depends on many factors. The propagation channel must be well defined and known to have an efficient prediction.
Radio coverage simulations are recommended before the installation of the Wirnet iBTS to make sure the gateway would cover the expected area. Contact KERLINK for more information.
In a first approach, the figures below show the RSSI of the signal (dBm) vs. the distance to the end point (meters) vs. the type of area (urban, suburban, countryside, desert). The height of the LoRa antenna is assumed to be 12 meters and 30 meters.

The propagation model used is based on Hata model.
The frequency is 868MHz in this case but performance and conclusions at 915MHz would be almost identical. The RSSI is the received signal by the Wirnet iBTS. The end point EIRP is assumed to be 25mW. The height of the end point is 1m.

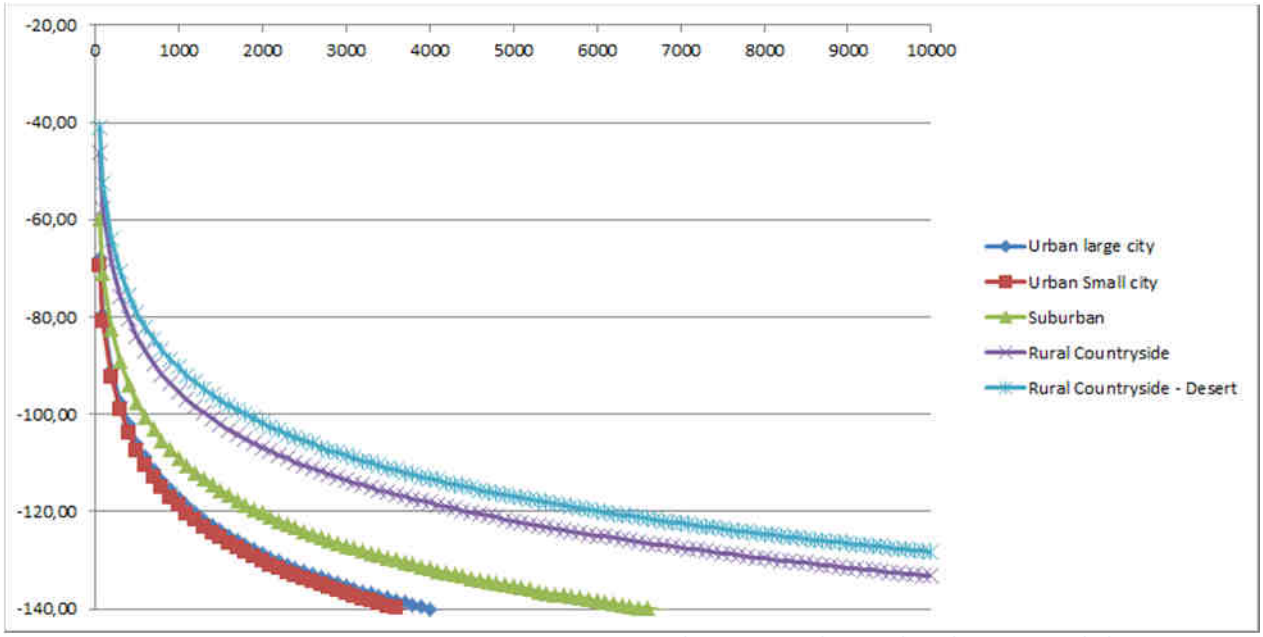

Figure 53 : Hata propagation model vs area configuration (Height = 12m) – RSSI (dBm) vs distance (m)

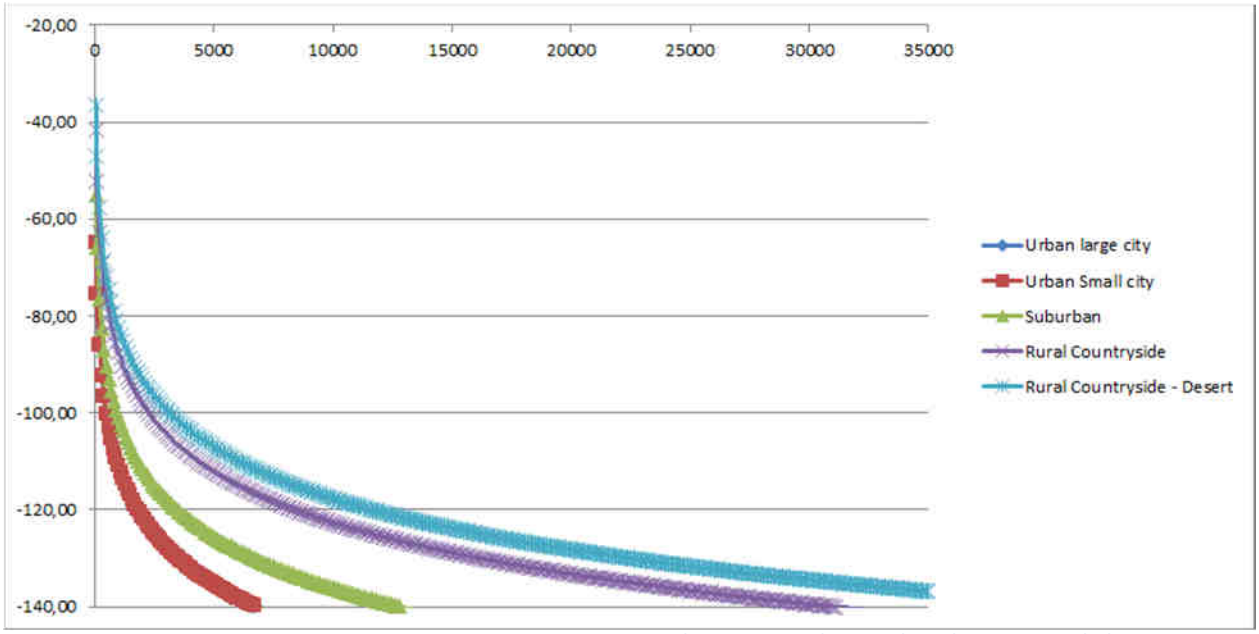

Figure 54 : Hata propagation model vs area configuration (Height = 30m) – RSSI (dBm) vs distance (m)

The coverage radius of the Wirnet iBTS, depending on the area type can vary from 2 km (urban areas, low height of the LoRa antenna), up to 40 km (countryside, very high sites).

3.3 Fresnel ellipsoid

Radio waves generally travel in a straight line from the emitter to the receiver. This is obviously true when there are no obstacles between the transmitter and the receiver. However, there are, most of the time, some obstacles between the transmitter and the receiver. Then, the radio waves bump into the obstacles and are reflected or diffracted with dephasing. These diffracted waves when arriving on the receiver can cause phase cancelling with the straight line signals reducing the received power (fading). The fading effect depends on the distance between the receiver and the emitter, the nature of the obstacles and the associated out of phase.

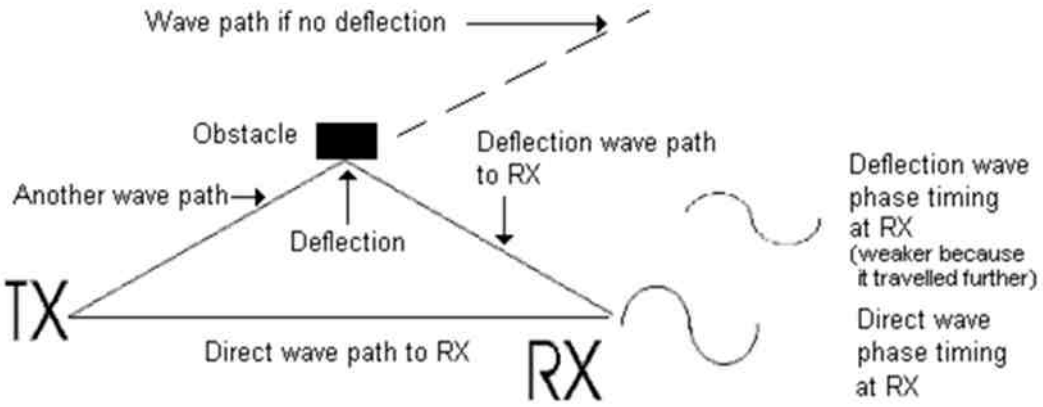

Figure 55 : Fading effects due to obstacles

To minimize the fading effects, obstacles in a “Fresnel ellipsoid” must be avoided.
The Fresnel ellipsoid is a theoretical ellipsoid located between the transmitter and the receiver.
The radius of the ellipsoid is defined as follows:

$$r1 = \sqrt{\frac{d1 * d2 * c}{f * (d1 + d2)}}$$

Where:

- d1 = distance from Tx antenna
- d2 = distance from Rx antenna
- f = frequency
- c = celerity (3E8 m/s)
- r1 = radius at the distance d1

A global rule is that 60% of the Fresnel ellipsoid must be clear of obstacles.
In case of buildings between the end point and the Wirnet iBTS, the antenna height must be adjusted to make sure the building is not close to 60% of r1.

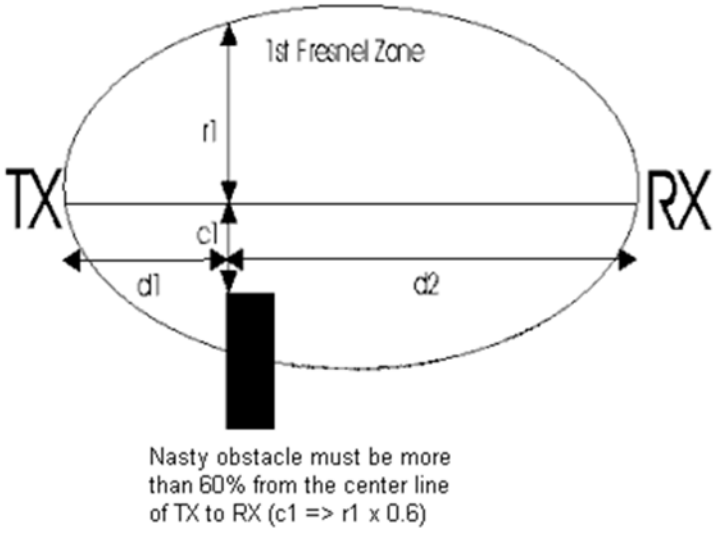

Figure 56 : Fresnel ellipsoid clearance

Be careful, if the antennas heights are not sufficient, then the ground (earth curve) can get inside the Fresnel ellipsoid and overrule the 60% criteria.

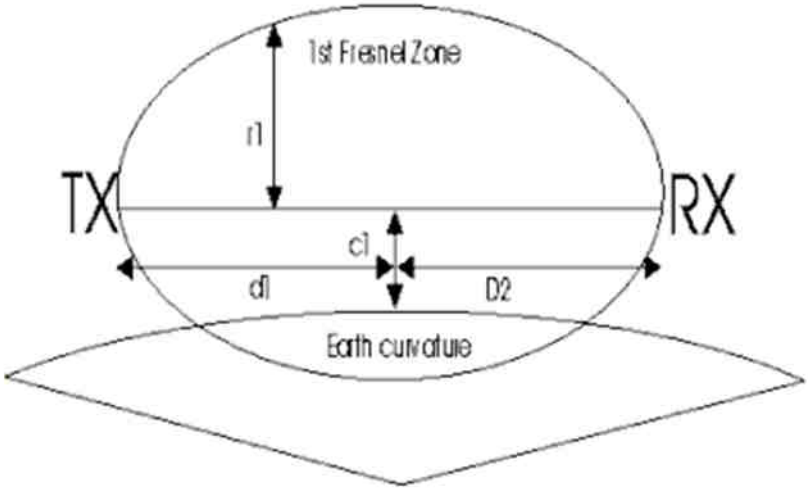

Figure 57 : Fresnel ellipsoid and earth curvature

Example:
An end point is located at 3500m from the Wirnet iBTS.
The Wirnet iBTS is installed on the roof of a building. The building roof is 30 meters long vs 20m large.
What is the required height of the LoRa antenna for have an optimized reception?

Answer:
If we want to receive end points i.e. 360° area coverage, it should be better to have the antenna located in the mid of the building roof.
The antenna is therefore at 15m from the edge of the roof.

Then we have:

- d1 = 15m
- d2 = 3600 -15 = 3585m
- f = 868MHz
- c = 3E8 m/s

So, r1 = 2.3m
The antenna must be installed at a minimum height of 2.3m from the roof top, on a mast for instance.

3.4 Co-localization with GSM/UMTS/LTE transmitters

The design of the Wirnet iBTS gateway insures good co-localization with other transmitters on the same site, and especially with BTS, in two ways:

- Limited spurious and noise generated in the BTS receiver bands
- Immunity to BTS transmitter

The Wirnet iBTS is obviously compliant to all EMC emissions and immunity regulations specific to each country. However, meeting these regulations is not sufficient to insure good coexistence with BTS when sharing the same site.
This is why KERLINK has reinforced these specifications to allow the coexistence.

KERLINK has designed the transmitter (LoRa-LOC module) to reduce the spurious and the noise generated in the BTS RX bands below -80dBm in a 100KHz resolution bandwidth. This is then pretty much in line with BTS specifications to insure co-localization between BTS.
The measurements made on the iBTS station show typical values of -85dBm/100KHz.

The receiver offers also high attenuation outside the receive band.
High attenuation of out of band blockers is obtained:

- >105dB at +/-10MHz
- >150dB in BTS downlink bands

This means that the blockers levels, due to the BTS, could be up to +10dBm causing no interference with the gateway.

Based on this performance, this means that about 50dB isolation is required between the Lora antenna of the Wirnet iBTS and the base station antenna to avoid desensitization of the BTS. Specifying a minimum distance between antennas may not guarantee the 50dB isolation, unless over specifying the required distance. This is mainly due to the fact that both LoRa antenna and BTS antennas are directive antennas. This means that the antenna gain is not omnidirectional in both cases.
BTS antenna have about 10 to 15dB antenna maximum gain but the gain above or below the antenna is reduced by 20dB to 30dB as described below:

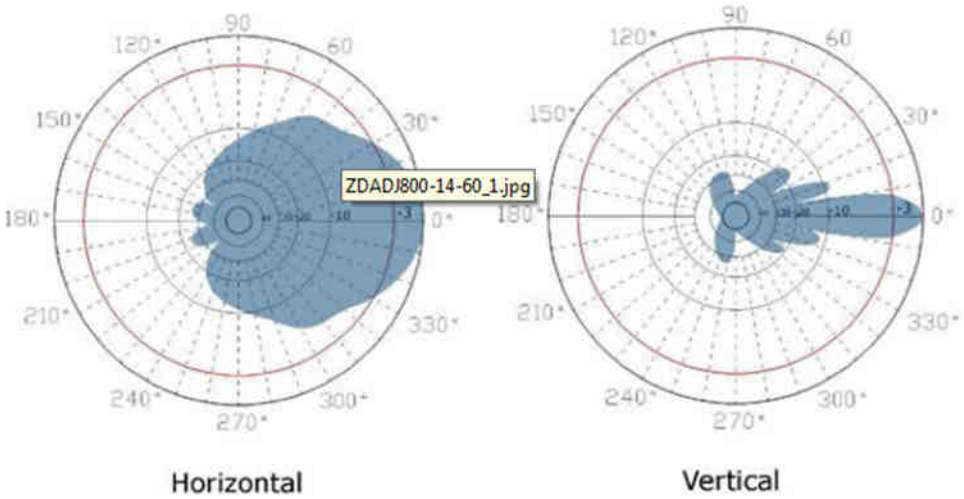

Figure 58 : Typical antenna gain pattern of a GSM BTS

Mounting the LoRa antenna just above or below the 4G antenna allows then to get 20 to 30dB isolation among the 50dB required.

The LoRa antenna can be an omnidirectional antenna. The worst case would be a 3dBi antenna which has the “less directive” antenna pattern. An example is presented below:

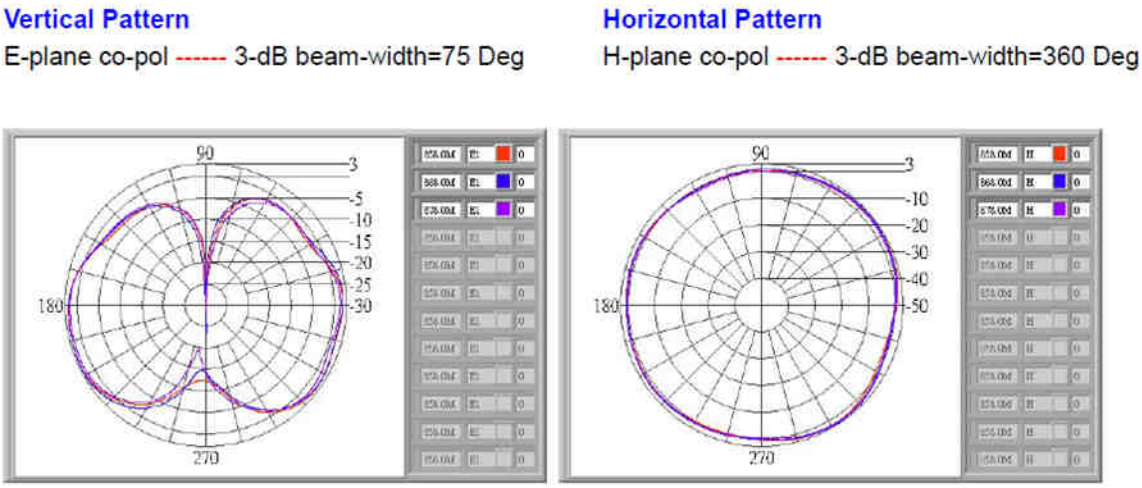

Figure 59 : Typical gain of 3dBi omnidirectional antenna

We can see that the gain on the top of the antenna or below the antenna is about -15dBi to -20dBi.

In case of sectorial antenna, the antenna gain above or below the antenna is also significantly reduced to -10 to -15dB as shown below:

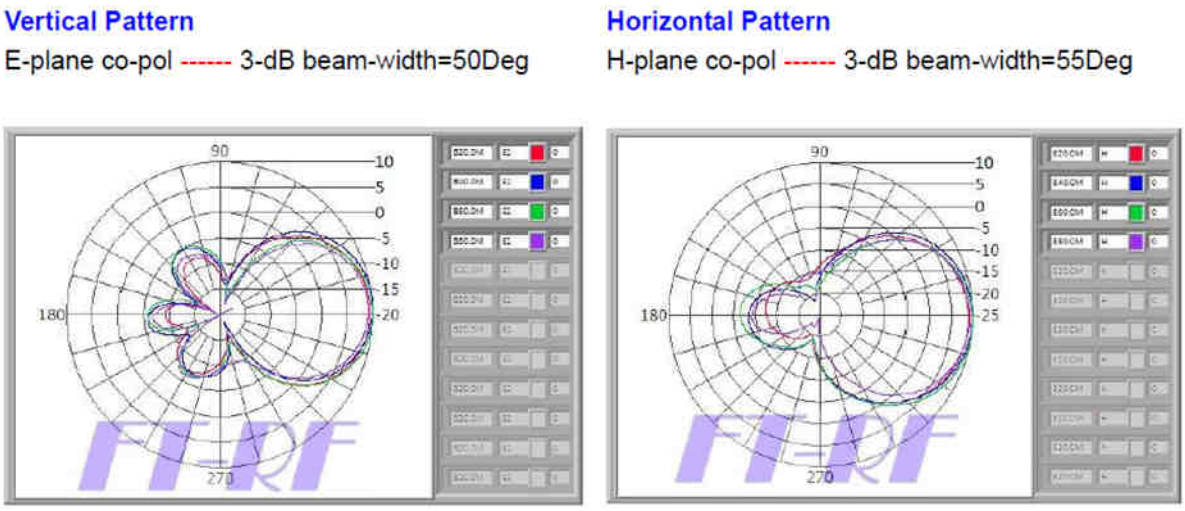

Figure 60 : Typical gain of a sectorial antenna

Then, taking into account the performance of the antenna, we need to get about 10 to 20dB more isolation to meet the 50dB isolation between antennas.
A gap of 1 meter between antennas would insure 30dB additional attenuation.

Therefore, our recommendation is to have the LoRa antenna just above the BTS antenna with 1 meter gap min.
Placing the LoRa antenna below the BTS antenna could be also possible. However, this is not recommended as reception could be impacted by metallic structures in the close area.

3.4.1 Wirnet iBTS 868

Co-localization is possible with the following BTS:

- EGSM900, GSM1800, GSM1900
- UMTS900, UMTS1900, UMTS2100
- LTE800, LTE 900, LTE 1800, LTE 2100, LTE 2300, LTE2600

The most difficult use case is the LTE 800 band that is very close to the 868MHz band. Actually, the end of the LTE 800 band is 862MHz whereas the beginning of the 868MHz band is 863MHz. Insuring -80dBm/100KHz at 862MHz while transmitting at 863MHz or even at 868MHz is not achievable with the state of the art of SAW filters. Therefore, the Wirnet iBTS gateway embeds specific SAW filters allowing the transmitter (LoRa-LOC module) to achieve the -80dBm/100KHz spurious limit in the LTE 800 band.

Co-localization is not possible with GSM850, UMTS850 and LTE850

Note:
In India, co-localization with CDMA800 / LTE 850 requires usage of a specific cavity filter.
See §1.7.3.1.

3.4.2 Wirnet iBTS 915

Co-localization is possible with the following BTS:

- GSM850, GSM1800, GSM1900
- UMTS850, UMTS1900, UMTS1700, UMTS2100
- LTE700, LTE850, LTE1700, LTE 1800, LTE1900, LTE2600

Co-localization is not possible with (E)GSM900, UMTS900 and LTE900.
In case of co-localization with GSM900, UMTS900 or LTE900, then the Wirnet iBTS 923 is a more suitable gateway. If Wirnet iBTS 915 want to be used when co-localized with GSM900, UMTS900 or LTE900, then a specific cavity filter is required. Contact KERLINK for more information.

3.4.3 Wirnet iBTS 923

Co-localization is possible with the following BTS:

- GSM850, GSM900, GSM1800, GSM1900
- UMTS850, UMTS900, UMTS2100
- LTE700, LTE800, LTE850, LTE 900, LTE 1800, LTE 2100, LTE 2300, LTE2500, LTE2600

Co-localization is not possible with EGSM900, only GSM900.

Note:
In Singapore and Hong-Kong, co-localization with EGSM900 requires usage of a specific cavity filter.
See §1.7.3.2.

4. Installation procedure

This device must be professionally installed.
Changes or modifications not expressly approved by the party responsible for compliance could void the user's authority to operate the equipment.

4.1 How to open the enclosure

Before proceeding to the insertion of the USIM card and the connection of the power supply, the enclosure has to be opened.

Note: the lid of the enclosure must be kept opened during all the installation allowing setting and checking all the connections. It must be closed once the installation is completed.

4.1.1 Standard casing version

The lid tightens to the frame with 4 x M5 screws, hidden by two plastic clip-on design covers.

First, remove the two plastic clips. This can be done manually, without any particular tool:

Figure 61: Wirnet iBTS – plastic clips on the lid

The 4 x M5 screws are now accessible.
Unlock the screw with a big flat-blade screw driver (65-098 5,5x100 Stanley for instance).

Figure 62: Wirnet iBTS – 4x M5 screws

Remove the lid.

4.1.2 Compact casing version

Opening of the compact casing is very simple as the cover of the enclosure is just clipped on the frame.
There are 2 door hinges that lock the cover. You just have to open one to open the cover like a door. Due to the 2 hinges, there are then two open points that are noted as "A" and “B” on the picture below:

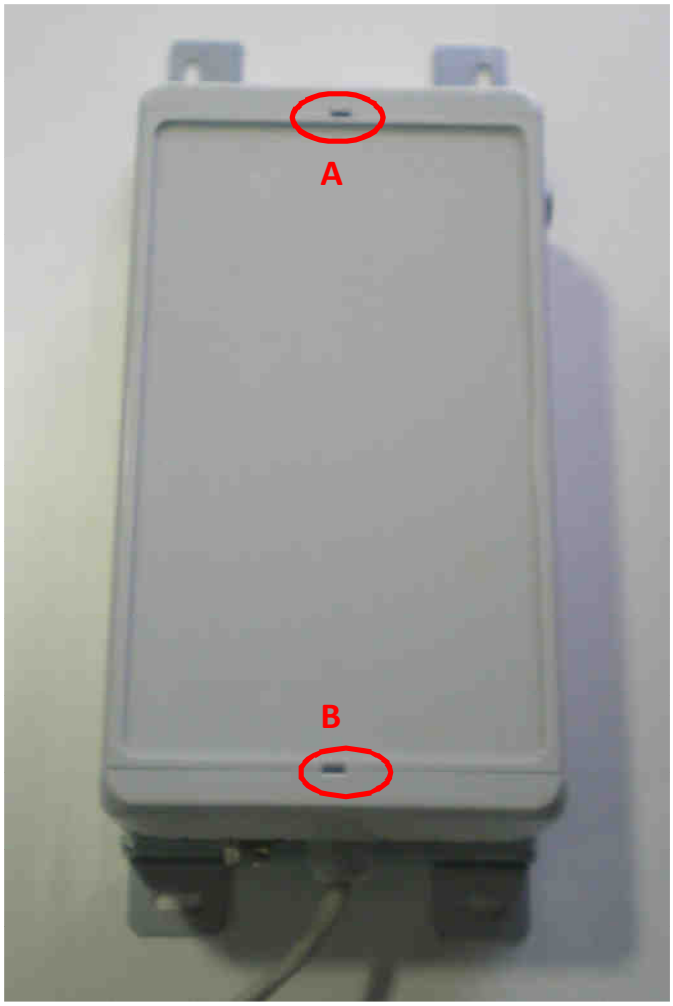

Figure 63 : Open points of the compact enclosure

To open the cover, you need to use a screwdriver that must be inserted in the slots A or B. The screw driver can be a small one or a bigger one.

Small flat-blade screw driver:
Example: 64-978 3x50 Stanley
Push the screw driver into the slot A, and lift up and down, down and up, with progressive strength and going deeper. It will clip. Don't be afraid to break it, if will be opened before, if you do it step by step (progressive, to feel the point of opening).

Big flat-blade screw driver:
Example: 65-098 5,5x100 Stanley
Push the screw driver into the slot, (it won't enter completely) and lift up in turning the screw driver into the slot (like to drive screws into the slot). Here you have to use more strength because the lever arm is smaller.

Figure 64 : Opening of the compact enclosure with screwdriver

4.2 Installation topology

4.2.1 Single Wirnet iBTS gateway installation

If a single gateway is installed on a site, two configurations are possible regarding the WAN technology used:

- LTE/HSPA/GPRS connection
- Ethernet connection

The LTE /HSPA/GPRS connection requires a USIM subscription.
The Ethernet connection requires an Ethernet access through a dedicated RJ45 cable.

Both configurations are detailed hereafter:

With USIM Subscription:

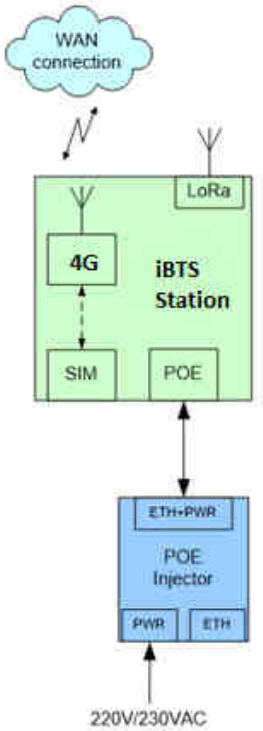

Figure 65 : Single station installation (with USIM)

Without USIM Subscription:

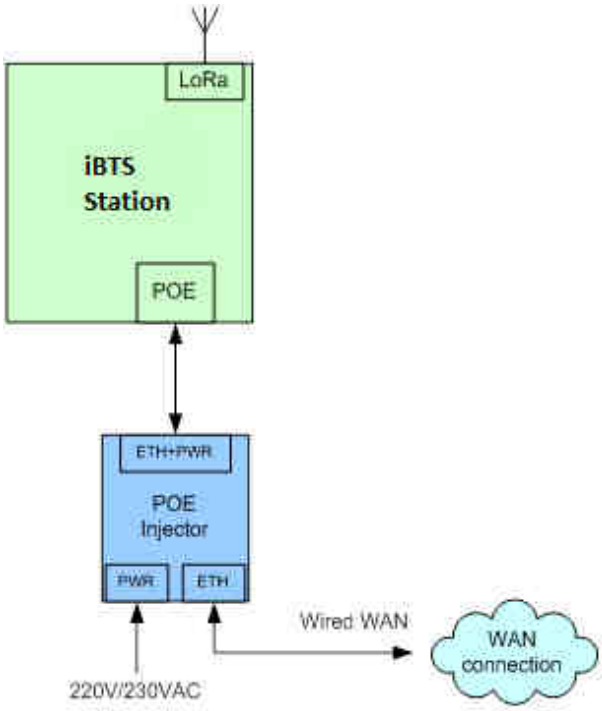

Figure 66 : Single station installation (No USIM)

4.2.2 Multi-Wirnet iBTS installation

In rare use cases, multiple Wirnet iBTS gateways can be installed on one site.
The recommended WAN connection is then Ethernet.
An Ethernet switch is used to interface all the gateways.

Note 1: the Ethernet switch is not provided by KERLINK

The configuration is detailed hereafter:

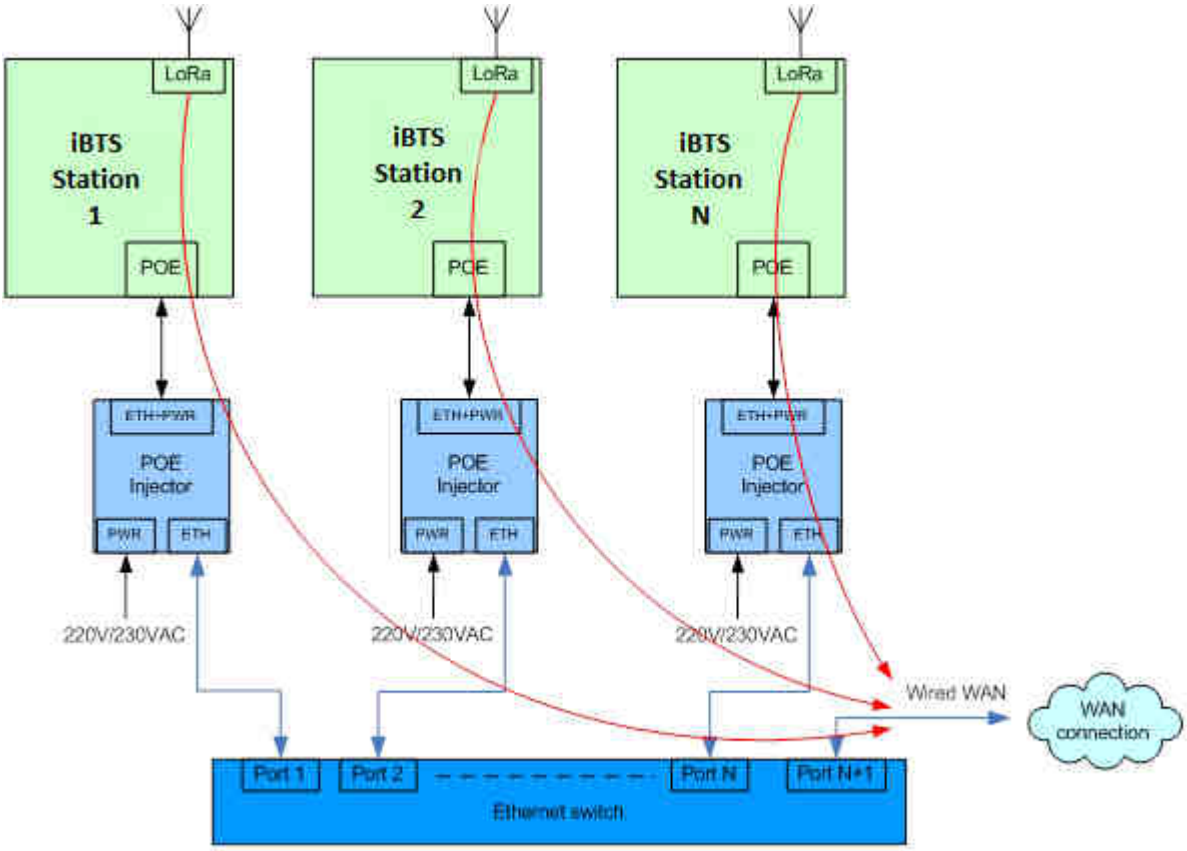

Figure 67 : Multi-station installation (No USIM)

Note 2: this configuration is no longer detailed in the present document

4.3 Electric distribution to the Wirnet iBTS

4.3.1 Safety

The installation must comply with EN 60728-11 (Cabled distribution systems standard - Security).
Earthing is a key parameter for a secure installation.
Earthing of the installation is mandatory for:

- Indoor installation parts: mains supply, PoE injector
- Outdoor installation parts: tower, pole, Wirnet iBTS mounting kit, antennas.

Note: none of the earthing cables required for the installation are provided by KERLINK.

A second key parameter for a secure installation is the lighting protection.
In its standard configuration, the Wirnet iBTS is provided with minimal internal surge protections. The Wirnet iBTS gateways are not warranted by KERLINK in case of deterioration due to lighting. Additional surge protections are recommended in harsh environments (see §4.8).
A lighting rod with a down conductor to earth is strongly recommended in most of the applications to avoid direct impacts on the aerials (antennas and Wirnet iBTS).
The following picture describes all the required cables connections required for the installation, including power supply cables, data cables, RF coaxial cables and earthing connections.

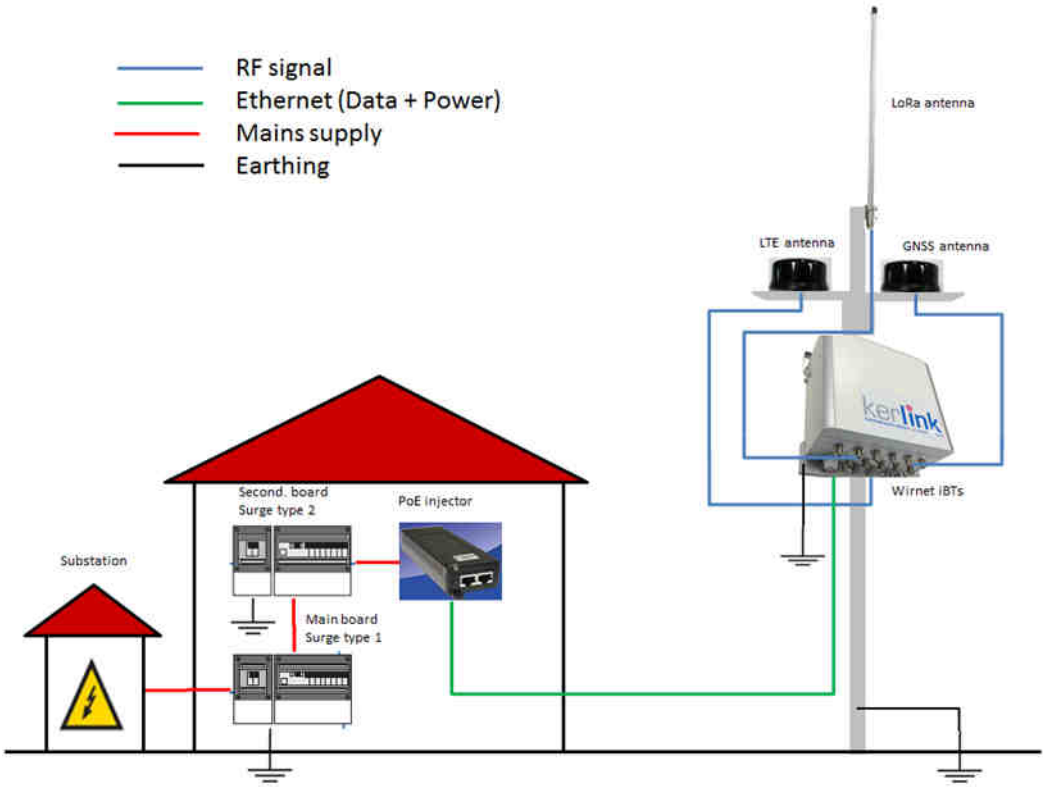

Figure 68 : Power distribution in the installation

4.3.2 Mains supply

The mains supply is not injected directly into the Wirnet iBTS but into the PoE injector.
The mains supply must be an indoor installation composed of:

- A main electrical board including:
  - a circuit breaker
  - a surge protection type 1
  - a connection to “earth”
- A secondary electrical board including:
  - a circuit breaker
  - a surge protection type 2
  - a connection to “earth”

Surge protections type 1 and 2 are required to protect the PoE injector.

Note: in case surge protections type 1 and 2 are not available, specific PoE injectors for outdoor applications are required (see § 4.3.3).

4.3.3 POE supply

The Wirnet iBTS gateway is supplied by a PoE injector through an Ethernet cable.
The PoE injectors are detailed in §1.7.1.1 and §1.7.1.2.
The recommended Ethernet cable is detailed in §1.7.5.1. It includes two RJ45 T 568A plugs on each side

Note 1: The Ethernet cable is not provided with the Wirnet iBTS.
Note 2: The maximum Ethernet cable length is 100m.
Note 3: The PoE injectors are considered as limited power sources

The installation of the PoE cable is detailed in §4.6.3.

4.3.4 Auxiliary power supply

The Wirnet iBTS can be also supplied with an auxiliary DC power supply as a solar panel for instance. The input voltage range is 11 to 56VDC. A 24V DC solar system is then recommended for optimized performance.
The power supply must be qualified as a limited power source.
The maximum power is 30W.
The nominal current for a 24V power supply is about 1.2A in the following configuration:

- HSPA in a network attached mode
- 4 LoRa LOC modules / all demodulators activated
- 20% CPU load

A two-wires cable is required to interconnect the auxiliary power supply connector.

The installation of the cable is detailed in §4.6.5.

4.4 Inserting an additional module inside the enclosure

The Wirnet iBTS is provided with a single LoRa module in its default configuration.
Additional Lora modules can be added to fulfill the needs.
To add a LoRa module in the Wirnet iBTS enclosure, follow the procedure below:

- Insert the LoRa module into the enclosure. Place it close to the available blind threaded standoffs on the back of the enclosure.
- Slide the new LoRa module on the left, close to the previous installed module:
  - Ensure the back panel connector is properly inserted into the previous module
  - Ensure the radiator of the new module get in contact with the radiator of the previous module
- Screw the module on the blind threaded standoffs with the provided M4 screws
- Screw the wing screws on top and on the bottom of the radiators

Note: to remove a LoRa module, use the same procedure.

Once the module is properly installed, then one or two N-SMB adapters are required for the antennas connections, depending on the chosen configuration.

To add a N-SMB adapter, follow the procedure below:

- Unscrew the M16 blind stop
- Screw the N-SMB adapter on the bottom side of the enclosure
- Connect the SMB-SMB coaxial cable between the N-SMB adapter and the RF1 (and RF2) port of the LoRa module

4.5 Mounting of the enclosure

4.5.1 General considerations

The Wirnet iBTS enclosure must be mounted on any concrete pedestal, concrete wall or any non-flammable surface (UL94-V0).
It must not be mounted on a flammable surface.

The mounting kits delivered with the Wirnet iBTS stations allow fixing the product in different ways:

- Wall mount
- Pole mount by U-bolt
- Pole mount by metallic strapping

Two different mounting kits are available depending on the casing:

- One for the Standard casing
- One for the Compact casing

Universal antenna brackets or specific antenna brackets are provided with the LoRa antennas. Universal antenna brackets can be directly mounted on the Compact casing mounting kit.
Dome antenna brackets are provided with the LTE antennas and GNSS antennas.

All these several kits are detailed in the following paragraphs.

4.5.2 Antennas mountings kits

4.5.2.1 GPS, LTE and LoRa antenna considerations

The Wirnet iBTS integrates GPS, LTE and LoRa antennas. GPS and LTE antennas can be integrated inside the enclosure (compact casing) or are external to the enclosure (standard casing). The LoRa antennas are always external to the enclosure.
The position of these antennas, in an open environment, is important and could determine the overall performance of the Wirnet iBTS.

The GPS antenna requires an open sky view to be able to receive a maximum number of satellites. This determines the PPS clock accuracy and finally the TDOA / geolocalization accuracy.
The antenna is provided with a 5m coaxial cable. Extension coaxial cables could be used to reach the optimum sky view but are not provided by KERLINK.

The LTE antenna requires an open environment to optimize the link with the BTS in the area. The benefits are less multipath fading and better data throughput.

The antenna is provided with a 5m coaxial cable. Extension coaxial cables of could be used to reach a better position but are not provided by KERLINK. However, beware of the insertion losses!

The LoRa antenna requires an open environment to optimize the link with the end-points.
The benefits are less multipath fading and optimized coverage area.
The antenna is provided with a 1m coaxial cable. Extension coaxial cables of could be used to reach a better position but are not provided by KERLINK. However, beware of the insertion losses!

4.5.2.2 Distance between antennas

4.5.2.2.1 LoRa antenna vs. LTE antennas

To avoid or minimize the intermodulation between the LoRa transmitter and the LTE transmitter, a minimum distance is required between the LoRa antenna and the LTE antenna. This minimum distance is also recommended to avoid mutual desensitization of the receivers.
With the Wirnet iBTS standard casing, it is very simple to ensure the required distance between antennas because they have separated antenna brackets.
With the Wirnet iBTS compact casing, the separation between antennas is more complex as the LTE antenna is internal (cannot be moved apart) and the LoRa antenna could be mounted on the universal antenna bracket tightened to the compact casing mounting kit.
To optimize the colocation between the internal LTE antenna and the external LoRa antenna, a distance of 20 cm is required between both radiated parts.
Therefore, when possible we strongly recommend dissociating the universal antenna bracket away from the compact enclosure support. This is the best way to guarantee the 20 cm min distance between LTE antenna and LoRa antenna.
When the dissociation is not possible, the LoRa antenna must be placed on the right side of the enclosure as described on Figure 69.

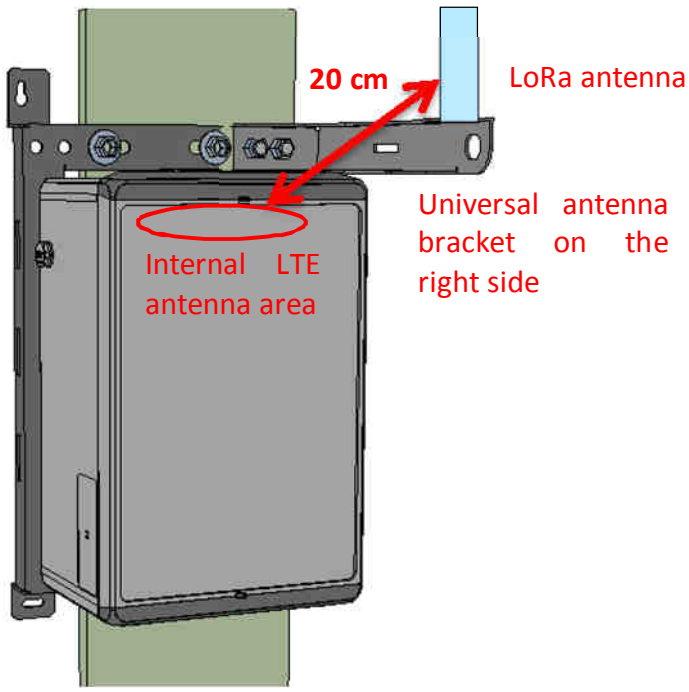

Figure 69 : Position of the universal antenna support when mounted on the compact enclosure support

4.5.2.2.2 LoRa space diversity

Distance between antennas to optimize the spacing diversity performance is always a subject of discussion. There are no miracle formulas helping to determine the distance because each use case is a particular use case.
However, there are some rules to be followed:

- The minimum distance between antenna must be the half wave length i.e.:
  - 18 cm at 868MHz
  - 17 cm at 915MHz
- To have uncorrelated antennas it is better to have a minimum distance of 13*λ/8 between antennas i.e.:
  - 56 cm at 868MHz
  - 53 cm at 915MHz
- The distances can be increased to improve the performance, ideally by steps of a wavelength. The recommended distances are then:
  - 868MHz: 56 cm, 91 cm, 125 cm, 160 cm, etc…
  - 915MHz: 53 cm, 86 cm, 119 cm, 151 cm, etc…

Note 1: the distance between the two universal antenna brackets installed on the compact casing mounting kit is 20cm. This meets the 18cm minimum distance for space diversity although the performance is not optimum.
Note 2: the universal bracket length is about 20cm. In a 120mm pole mount configuration, the maximum distance between antennas can be the 20+20+12=52cm which is close to the optimum distance listed above.

4.5.2.3 Universal antenna bracket

The universal antenna bracket is used with the following antennas:

- 868MHz, 3dBi omnidirectional (see §1.7.2.1).
- 915MHz, 3dBi omnidirectional (see §1.7.2.2).
- 915MHz, 6dBi omnidirectional, except FT-RF antenna (see §1.7.2.3).

The universal antenna bracket is detailed in §1.7.7.2.

The universal antenna bracket has 3 holes dedicated to the LoRa antenna N connector. The bracket can be then oriented in 3 different positions without compromising the antenna position.
The universal antenna bracket can be mounted:

- On a wall: use in this case two M4 screws separated by 19mm.
- On a pole: use metallic strapping through the two 5mm x 25mm slots.
- On the compact casing mounting kit, with 2 x M8 bolts and screws as follows.
  It is preferred to have the universal antenna bracket installed on the right side of the compact casing mounting kit (as follow) to have a better isolation between the LoRa antenna and the GPS/LTE internal antennas.

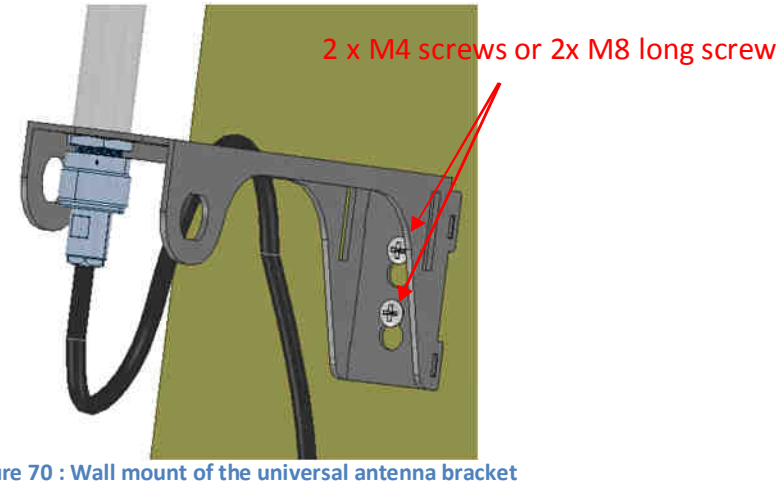

Figure 70 : Wall mount of the universal antenna bracket

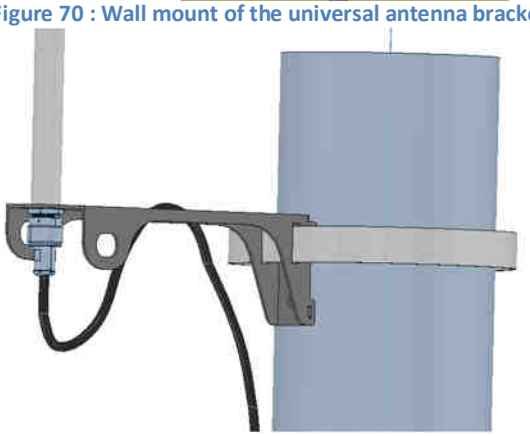

Figure 71 : Pole mounting of the universal antenna bracket using strapping

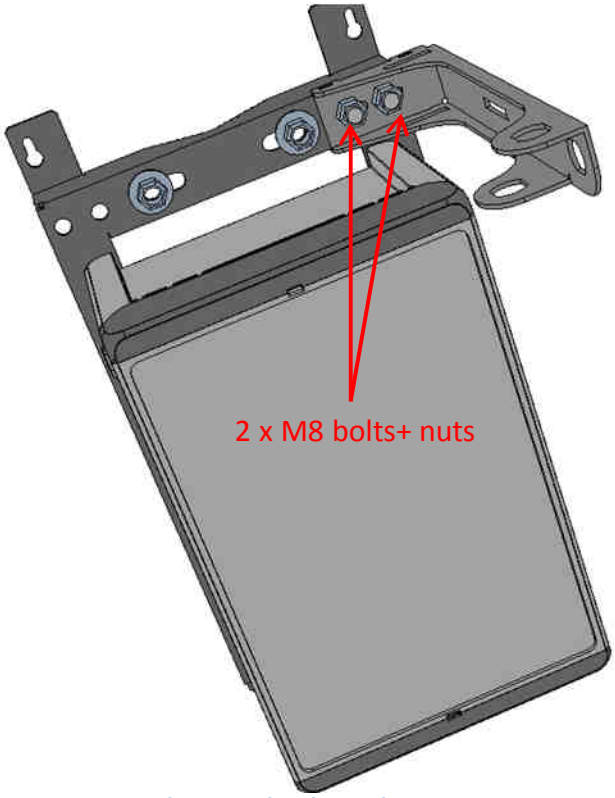

Figure 72 : Universal antenna bracket with compact casing mounting kit

Note 1: the M4 screws, the metallic strapping are not provided by KERLINK.
Note 2: the M8 bolts and nuts are provided by KERLINK.

Once the universal antenna bracket is installed, then the LoRa antenna can be mounted on the bracket. The LoRa antenna is provided with a N female connector, a washer and a M19 nut.
Follow the following procedure:

- Unscrew the M19 nut
- Remove the washer
- Introduce the N connector into the hole of the universal antenna bracket
- Place the washer
- Screw the M19 nut

Figure 73 : LoRa antenna mounted on universal antenna bracket

Note 3: The LoRa 915MHz/ 6dBi omnidirectional antenna from FT-RF with its own mounting kit based on two U-bolts for pole mount. The pole must have a maximum diameter of 50mm. This antenna cannot be installed on the universal antenna bracket.

4.5.2.4 Dome antenna bracket

The dome antenna bracket is used for the following antennas:

- GNSS antenna (see §1.7.4.1)
- LTE antenna (see §1.7.4.2)

The dome antenna bracket is detailed in §1.7.7.3.

The dome antenna bracket has a single hole dedicated to the LTE and / or GPS M22 screw. The dome antenna bracket can be mounted:

- On a wall: use in this case 2 x M4 screws separated by 76mm.
- On a pole: use metallic strapping through the two 4mm x 25mm slots.
- On a pole: alternate option is to use the “notched V shaped plate and a U-bolt” as detailed in §1.7.7.1. The maximum diameter of the pole is 60mm.

Another slot is available. It can be used for cable ties to tighten the RF coaxial cable to the antenna bracket.

Note 1: the M4 screws, the metallic strapping are not provided by KERLINK.

Note 2: the cables ties are not provided by KERLINK.

Note 3: the notched V shaped plate and a U-bolt can be provided by KERLINK as accessories (see §6).

Once the dome antenna bracket is installed, then the GPS antenna, or LTE, or GPS/LTE combo antenna can be mounted on the bracket. These antennas are provided with N female connector(s) and a M22 nut.

Follow the following procedure:

- Introduce the N connector(s) into the hole of the bracket
- Pass all the coaxial cable length through the hole until the antenna is in contact with the bracket
- Unscrew the M22 nut
- Introduce the antenna M22 screw into the hole
- Beware the position of the gasket to insure waterproof installation. There must be no aperture between the antenna casing and the gasket.
- Screw the M22 nut

Repeat the operation for GPS antenna, LTE antenna (or GPS/LTE combo antenna).

Figure 74 : N connector introduced in the hole of the dome antenna bracket

Figure 75 : Antenna installed on the dome antenna bracket

4.5.3 Mounting of the compact enclosure

4.5.3.1 Compact casing mounting kit

The Compact casing mounting kit is composed of a single mechanical part as shown below:

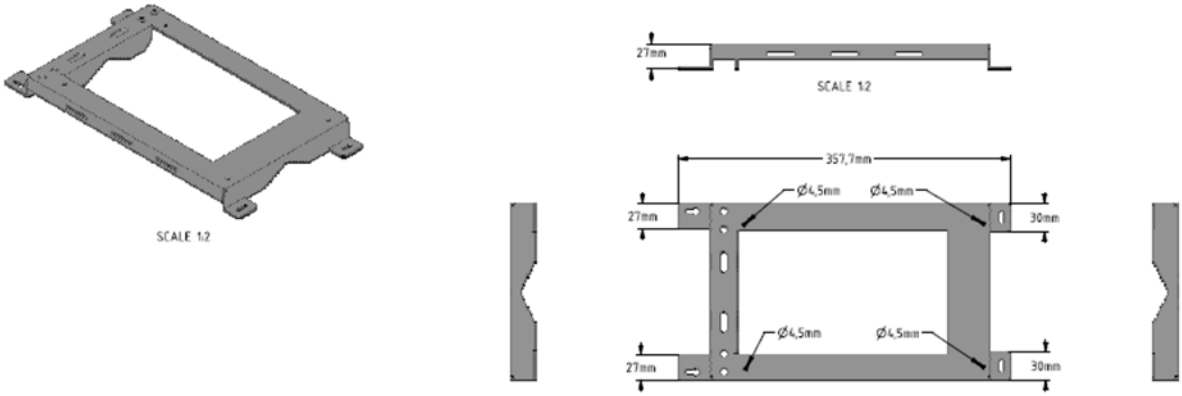

Figure 76 : Compact casing mounting kit dimensions

The Wirnet iBTS Compact is delivered with the compact casing mounting kit already installed on the back.

4.5.3.2 Wall mounting

The Wirnet iBTS can be also mounted on a wall with 4 x M4 screws.

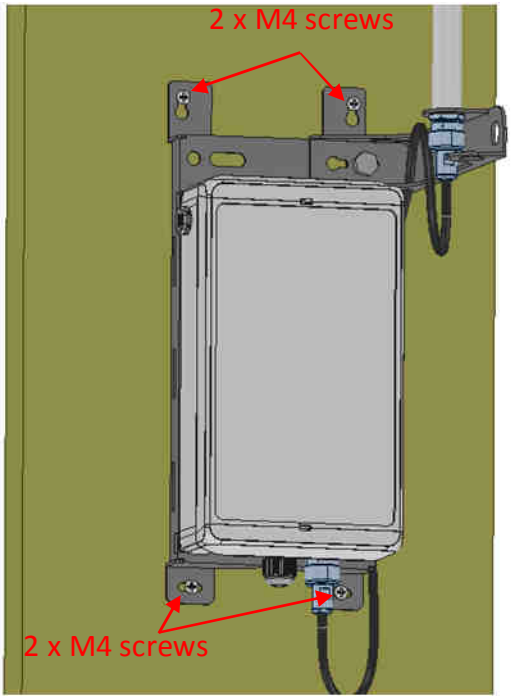

Figure 77 : Compact casing - Wall mount

Note: M4 screws are not delivered with the mounting kit.

For safety reason, the metallic mounting kit must own a good earth connection. This is ensured by adding an earth connection through the M8 bolt and nut (see §4.6.1.2).

4.5.3.3 Pole mounting by U-bolt

The Wirnet iBTS is delivered with a U-bolt to be mounted on a pole with a maximum diameter of 60mm.
To screw the U-bolt, it is recommended to use the nuts provided in the mounting kit.

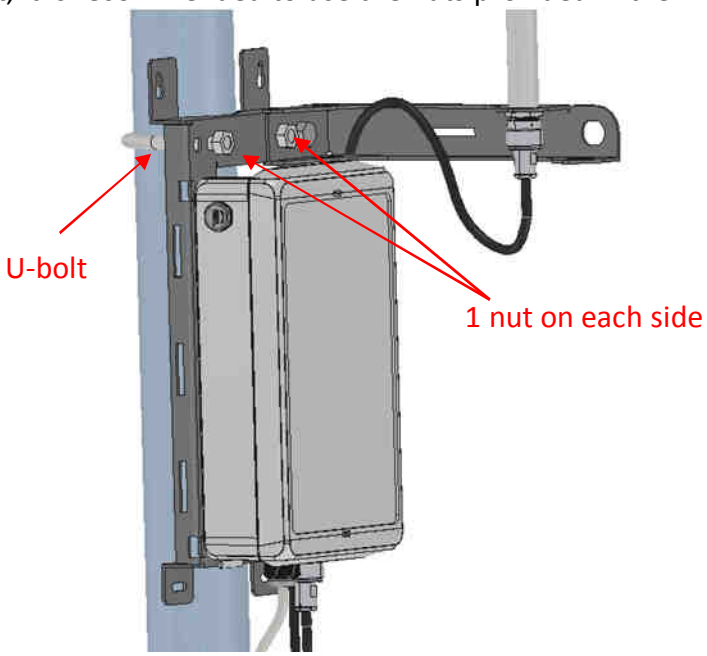

Figure 78 : Compact casing - Pole mount using U-bolt

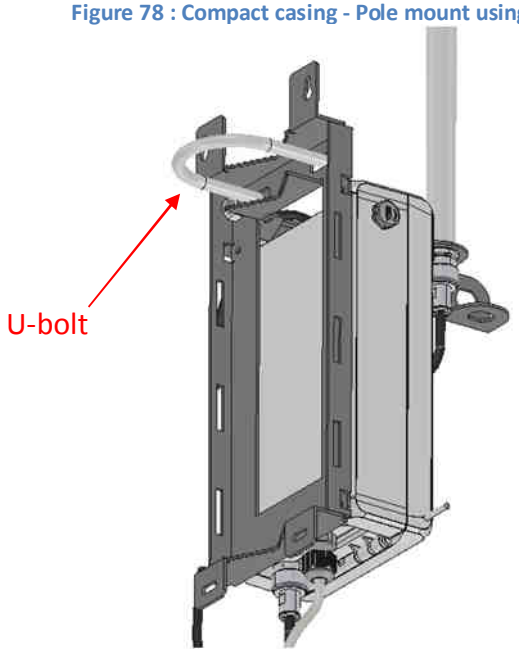

Figure 79 : Compact casing - rear view of the pole mounting using U-bolt (no pole represented)

For safety reason, the metallic mounting kit must own a good earth connection. This is ensured by adding an earth connection on the U bolt nut or the M8 nut (see §4.6.1.2).

4.5.3.4 Metallic strapping mounting

The Wirnet iBTS can be also mounted on a pole by strapping. The maximum acceptable width of the strapping is 25mm. It is recommended to use 2 metallic strappings as described on the figure below:

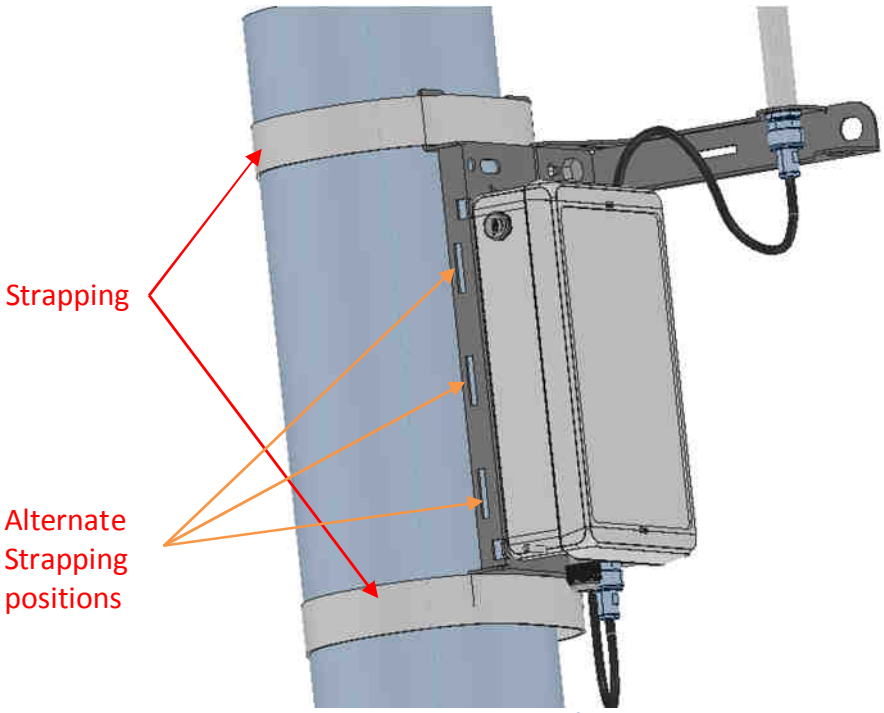

Figure 80 : Compact casing - Pole mount using strapping

For safety reason, the metallic mounting kit must own a good earth connection. This is ensured by adding an earth connection on the M8 nut (see §4.6.1.2).

4.5.4 Mounting of the standard enclosure

4.5.4.1 Standard casing mounting kit

The standard casing mounting kit is composed of two identical parts as shown below:

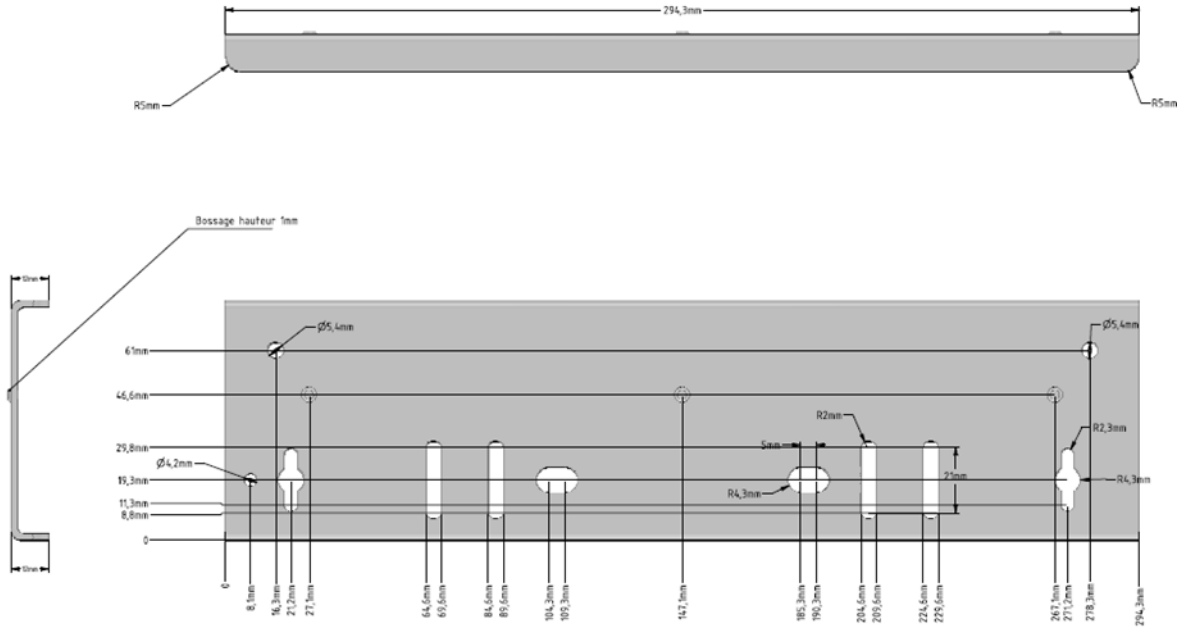

Figure 81 : Standard casing mounting kit dimensions

One part is mounted on the top of the enclosure and the second one on the bottom of the enclosure. The parts include several holes and slots dedicated to wall mount screwing and strapping. The holes are also used for earthing through a M8 bolt and nut (see §4.6.1.1).

The Wirnet iBTS is delivered with the standard casing mounting kit already installed on the rear side:

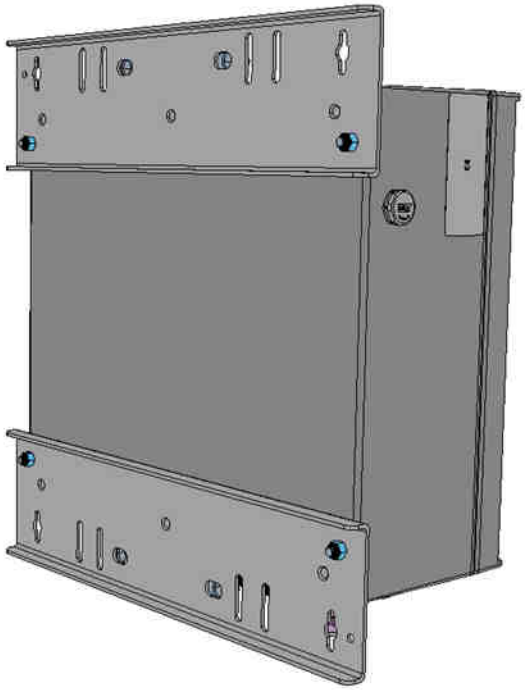

Figure 82 : Rear view of the standard casing with mounting kit

4.5.4.2 Wall mounting

The Wirnet iBTS can be also mounted on a wall with 4 x M4 screws.
Note: M4 screws are not delivered with the mounting kit.

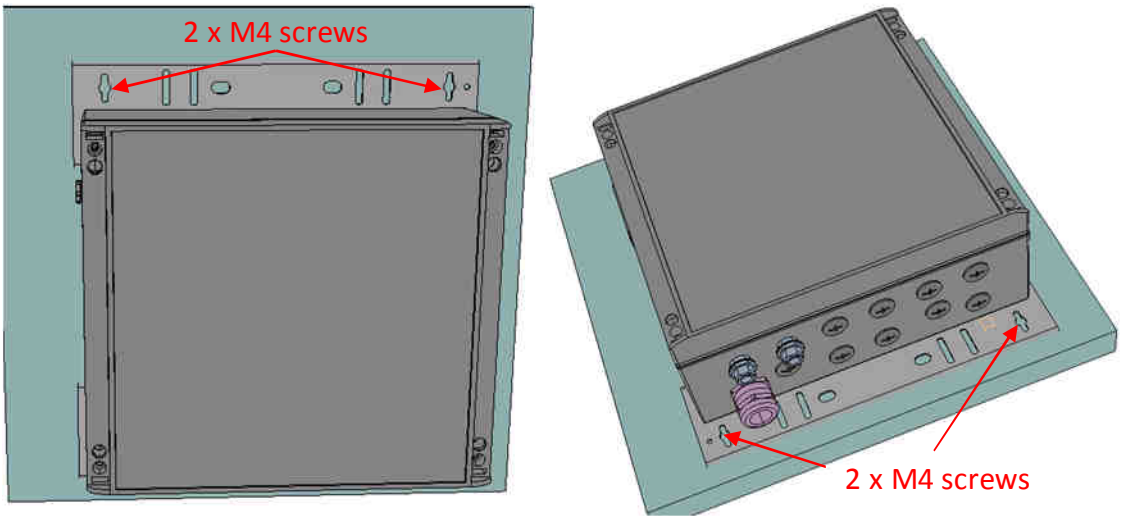

Figure 83 : Compact casing - Wall mount

For safety reason, the metallic mounting kit must own a good earth connection. This is ensured by adding an earth connection on the dedicated hole (see §4.6.1.1).

4.5.4.3 Pole mounting by U-bolt

The Wirnet iBTS is delivered with two notched V-shaped plates and two U-bolts to be mounted on a pole with a maximum diameter of 60mm.
To screw the U-bolts, it is recommended to use the four nuts provided in the mounting kit.

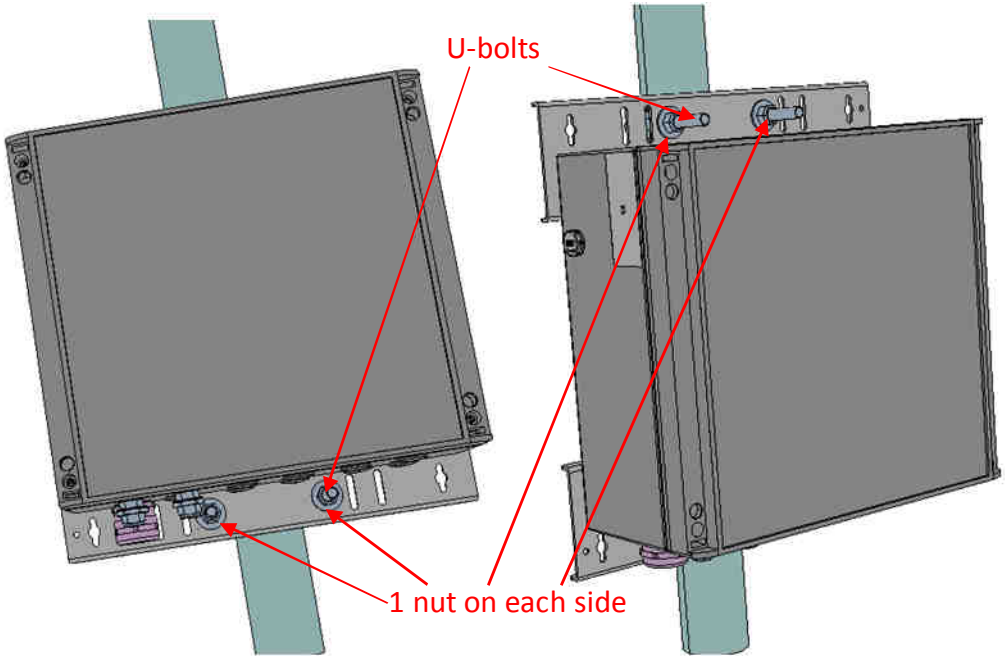

Figure 84 : Standard casing - Pole mount using U-bolts

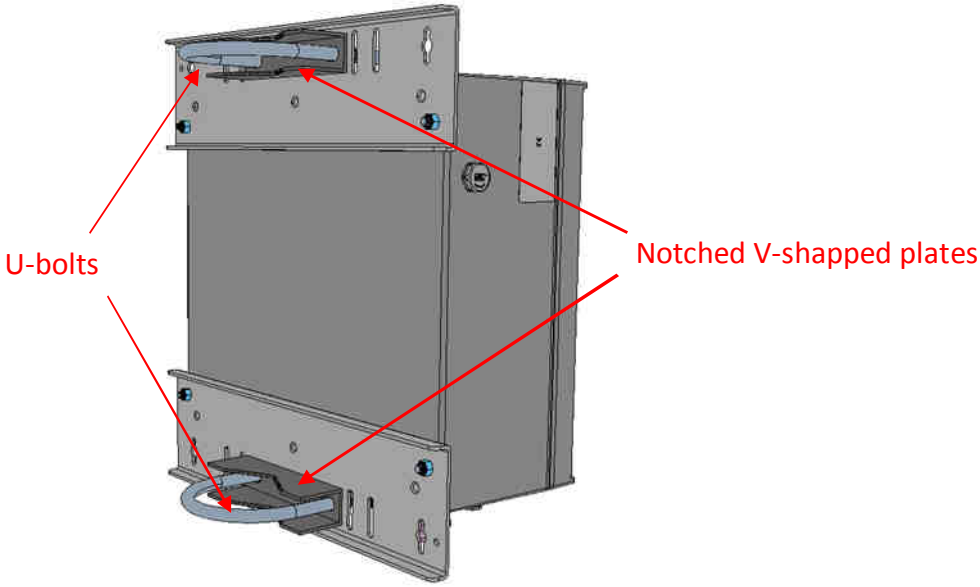

Figure 85 : Compact casing - rear view of the pole mounting using U-bolt (no pole represented)

For safety reason, the metallic mounting kit must own a good earth connection. This is ensured by adding an earth connection on the dedicated hole (see §4.6.1.1).

4.5.4.4 Metallic strapping mounting

The Wirnet iBTS can be also mounted on a pole by strapping. The maximum acceptable width of the strapping is 25mm. Several slots are available allowing adapting different diameters of poles. It is recommended to use 2 metallic strappings as described on the figure below:

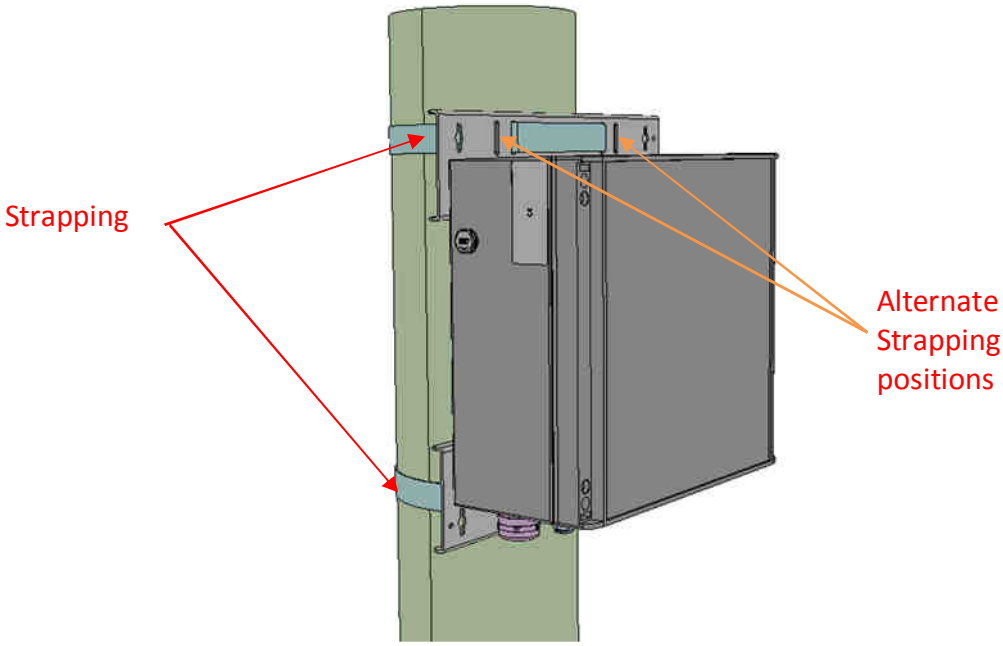

Figure 86 : Standard casing - Pole mount using strapping

For safety reason, the metallic mounting kit must own a good earth connection. This is ensured by adding an earth connection on the dedicated hole (see §4.6.1.1).

4.5.5 Mounting of the accessories

4.5.5.1 Indoor PoE injectors

Both indoor PoE injectors described in §1.7.1.1 and §1.7.1.2 can be wall mounted with 2 x M3 screws.

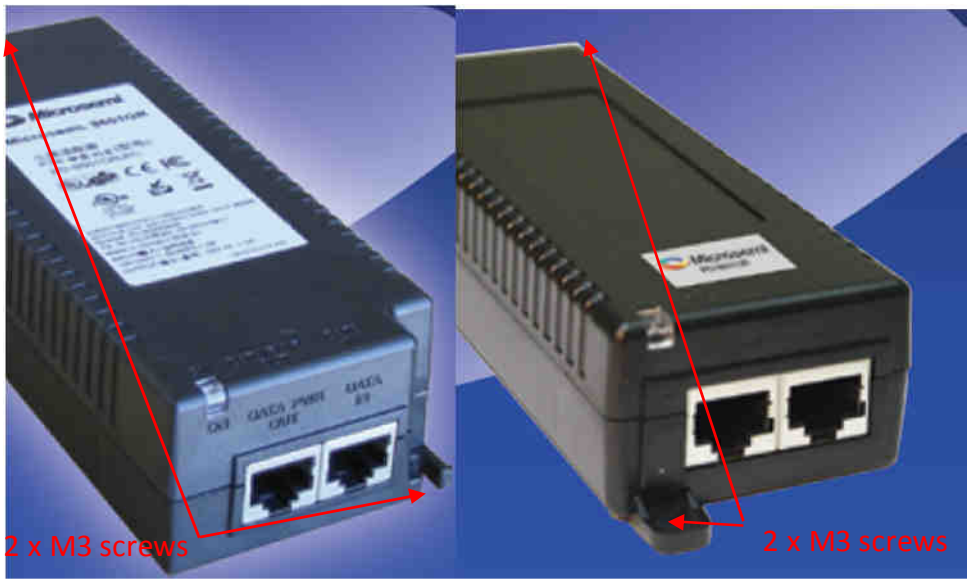

Figure 87 : Screws for indoor POE injectors mounting

4.5.5.2 Outdoor PoE injectors

Both outdoor PoE injectors described in §1.7.1.3 and §1.7.1.4 can be wall mounted using 3 x M3 screws (positions 1, 2 and 3 below):

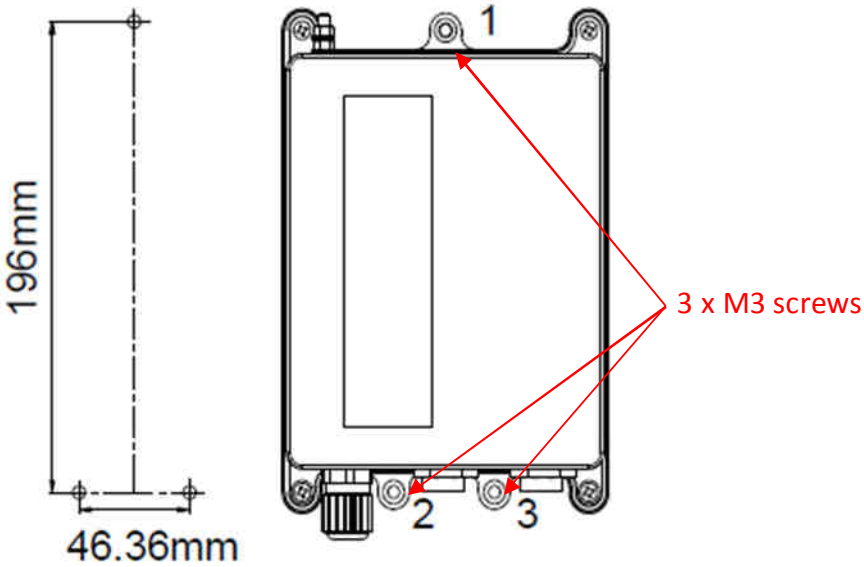

Figure 88 : Screws for outdoor POE injectors mounting

A mounting bracket kit is also available:

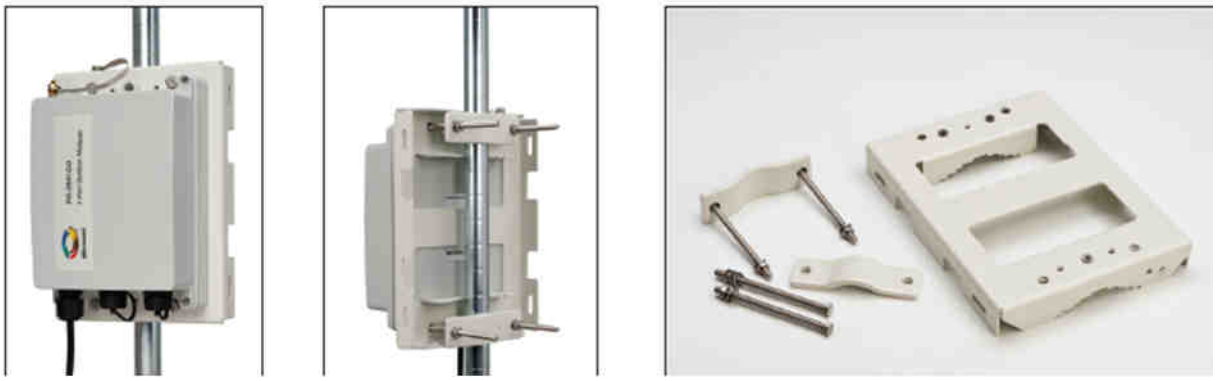

Figure 89 : Mounting bracket for outdoor POE injectors

4.5.5.3 Indoor Ethernet surge protection

The indoor Ethernet surge protection is provided with a clip dedicated to DIN rail mounting. The DIN rail clip can be removed by unscrewing the nut:

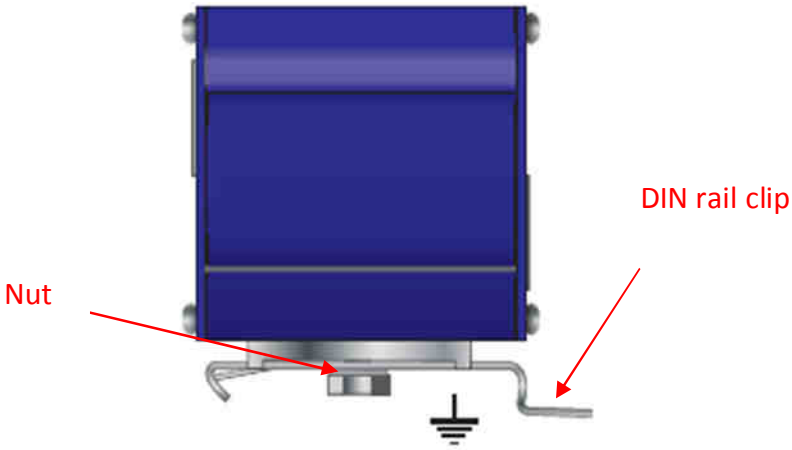

Figure 90 : Indoor Ethernet surge protection – DIN rail clip

4.5.5.4 Outdoor Ethernet surge protection

The outdoor Ethernet surge protection is provided with an “omega” bracket dedicated to wall mounting. Use 2 x M4 screws to fix to bracket on the wall:

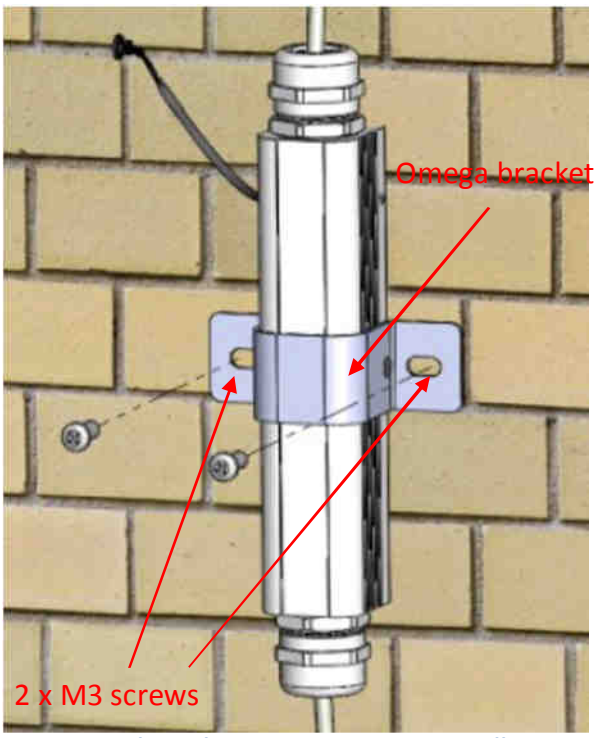

Figure 91 : Outdoor Ethernet Surge protection – wall mounting

The outdoor Ethernet surge protection can be also pole mounted with strapping.
Disassemble the "omega" bracket by unscrewing both of its screws.
Mount the surge protection on the pole and use a metallic strapping or worm gear clam to fix it:

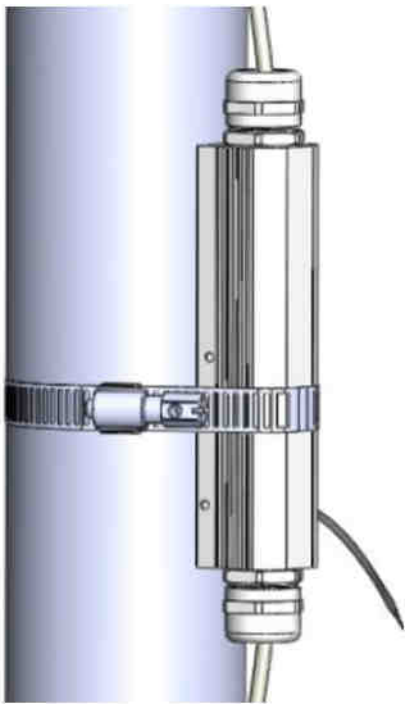

Figure 92 : Outdoor Ethernet Surge protection – pole mounting with strapping

4.5.5.5 RF coaxial surge protection

The RF coaxial surge protections are directly mounted (screwed) on the N connectors of the antennas or of the Wirnet iBTS.

4.5.5.6 Cavity filters

The cavity filters are directly mounted (screwed) on the N connectors of the antennas or of the Wirnet iBTS.
They can also be wall mounted with 4 x M4 x 8 mm screws as detailed in Figure 32 and Figure 34.

4.6 Setting connections

Before setting all connections, ensure that the POE injector is not connected to the mains supply.
The following pictures details all the Wirnet iBTS required connections, including power supply cables, data cables, RF coaxial cables and earthing connections:

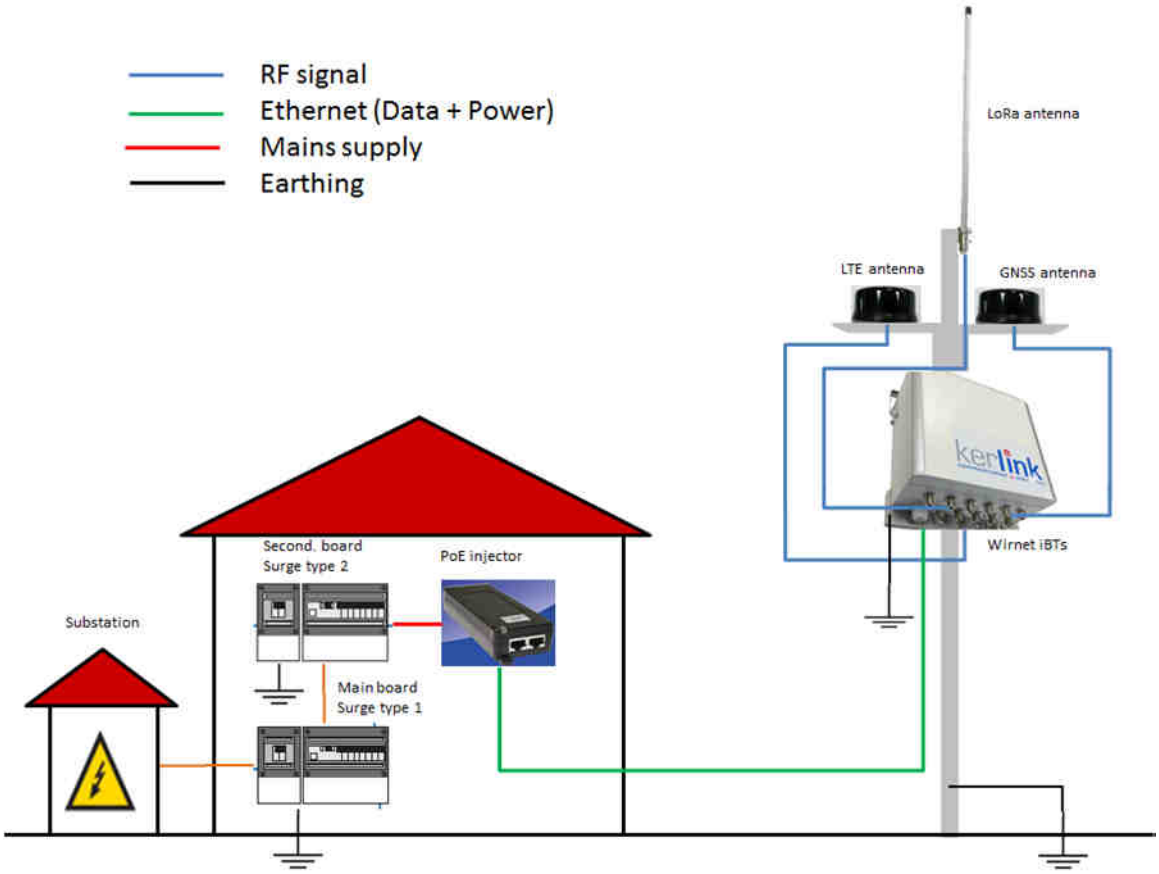

Figure 93 : connection settings of the installation

4.6.1 Earthing

Several earthing cables, wires, tapes or ring tongue terminals are required to connect the installation and the materials to earth for lighting immunity and electrical security:

- Earthing of the Wirnet iBTS mounting kit
- Earthing of the RF coaxial surge protection
- Earthing of the Ethernet surge protection
- Earthing of the outdoor PoE injector

A M8 ring tongue terminal is provided for earthing of the Wirnet iBTS mounting kit.
The earthing cables characteristics are detailed in §1.7.5.2.

Note: the earthing cables are not provided by KERLINK.

4.6.1.1 Earthing of the Wirnet iBTS mounting kit

Earthing of the standard casing mounting kit is completed through the 2 holes dedicated to the M8 U Bolt used for pole mount. The earthing symbol ⏚ is placed close to dedicated holes. Two different configurations are then possible, depending on the usage of the U bolt:

1. The M8 U bolt is used (pole mount by U-bolt configuration):
   The U-bolt and the M8 nut are used to connect the ring tongue terminal
2. The M8 U bolt is not used (wall mount configuration or metallic strapping configuration):
   A M8 bolt and nut is used to connect the ring tongue terminal

The different configurations are presented below:

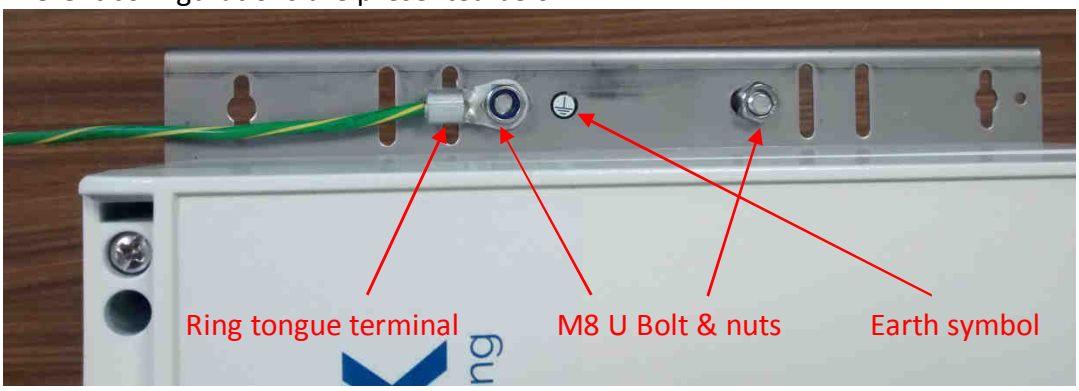

Figure 94 : Standard casing – earthing with U bolt configuration

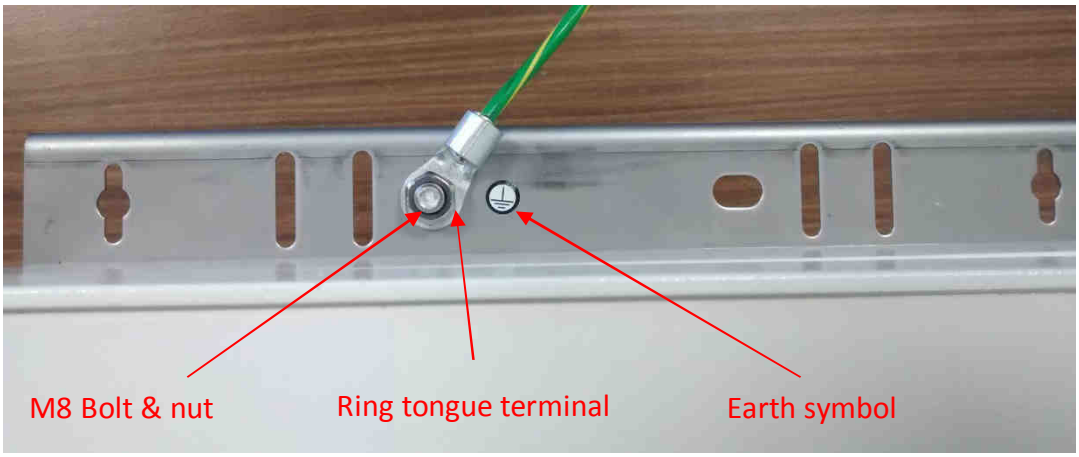

Figure 95 : Standard casing – earthing without U bolt configuration

Crimp the ring tongue terminal to earthing cable with the crimping tool
Connect the ring tongue to the mounting kit with M8 bolt and nut.
Connect the other side of the earthing cable to the earthing system or lighting protection system of the of the pole, mast, … of the installation.

Note 1: the earthing cable is not provided by KERLINK
Note 2: the earthing cable characteristics are detailed in §1.7.5.2.
Note 3: use a crimping tool to crimp the ring tongue terminal with earthing cable.

4.6.1.2 Earthing of the Wirnet iBTS Compact mounting kit

Earthing of the compact casing mounting kit is completed through the holes dedicated to the M8 U Bolt used for pole mount or the holes dedicated to the universal antenna bracket. The earthing symbol ⏚ is placed close to dedicated holes. Two different configurations are then possible, depending on the usage of the U bolt:

1. The M8 U bolt is used (pole mount by U-bolt configuration):
   The U-bolt and the M8 nut are used to connect the ring tongue terminal
2. The M8 U bolt is not used (wall mount configuration or metallic strapping configuration):
   The M8 bolt and nut dedicated to the universal antenna bracket is used to connect the ring tongue terminal. It can be used whatever the universal antenna bracket is installed or not on the mounting kit.

The different configurations are presented below:

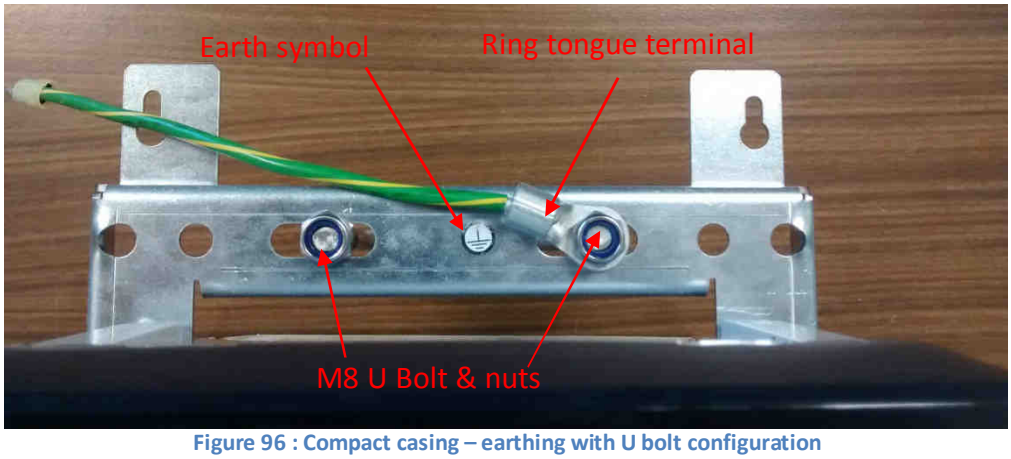

Figure 96 : Compact casing – earthing with U bolt configuration

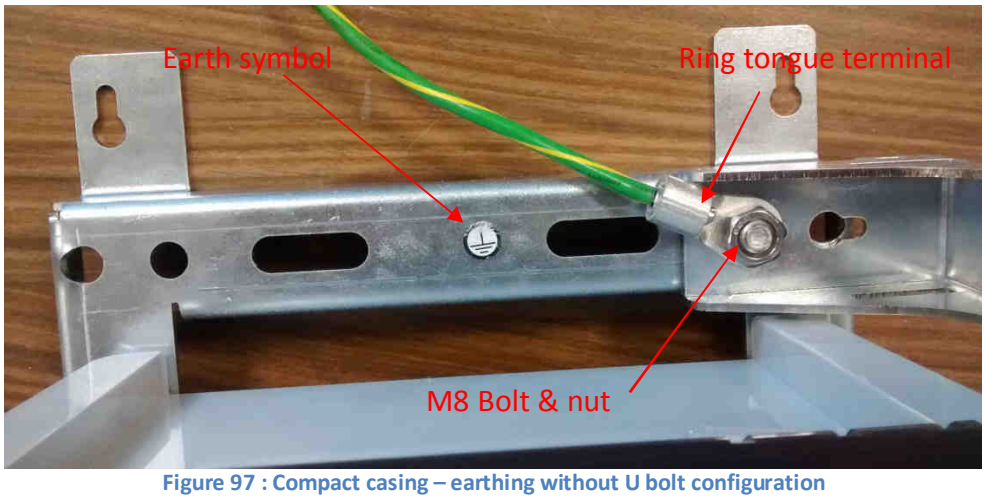

Figure 97 : Compact casing – earthing without U bolt configuration

Crimp the ring tongue terminal to earthing cable with the crimping tool
Connect the ring tongue to the mounting kit with M8 bolt (or U-bolt) and nut.

Connect the other side of the earthing cable to the earthing system or lighting protection system of the of the pole, mast, … of the installation.

Note: 1 the earthing cable is not provided by KERLINK
Note 2: the earthing cable characteristics are detailed in §1.7.5.2.
Note 3: use a crimping tool to crimp the ring tongue terminal with earthing cable.

4.6.1.3 Earthing of the RF coaxial surge protection

On the RF coaxial surge protection side, the earthing connection is completed through a ring tongue terminal. The earthing cable must be crimped inside this ring tongue terminal.
A specific crimping tool is required to perform the operation.

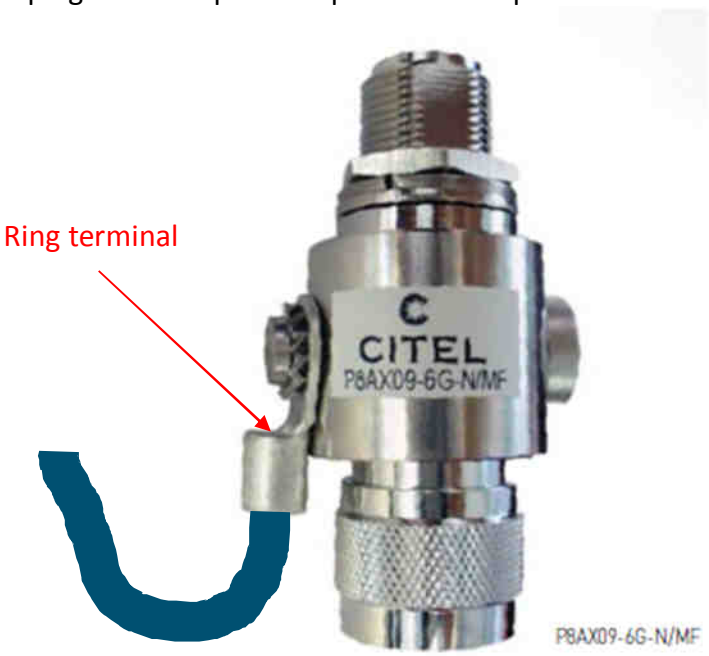

Figure 98 : Earthing of the RF coaxial surge protection

Note 1: the earthing cable is not provided by KERLINK
Note 2: the earthing cable characteristics are detailed in §1.7.5.2.
Note 3: use a crimping tool to crimp the ring tongue terminal with earthing cable.

4.6.1.4 Earthing of the Ethernet surge protection

On the indoor Ethernet surge protection side, the earthing connection is completed through the DIN rail clip. Therefore, the earthing cable can be connected to the DIN rail itself or using the nut of the DIN rail clip.

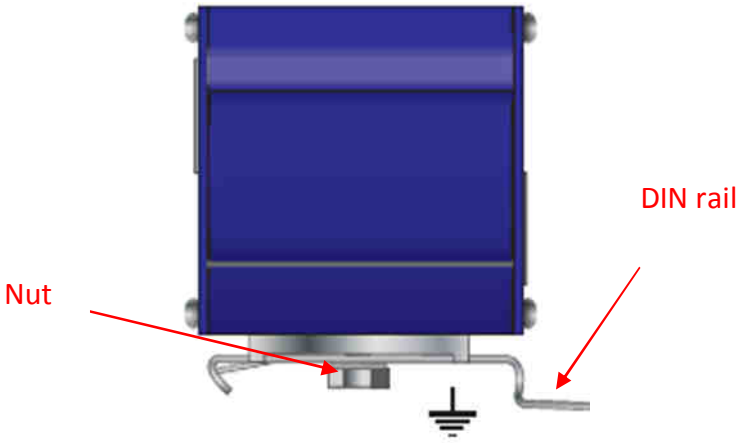

Figure 99 : Earthing of the indoor Ethernet surge protection

On the outdoor Ethernet surge protection side, the earthing connection is completed through a dedicated earthing screw. The earthing connection is completed through a ring terminal. The earthing cable must be crimped inside this ring terminal.
A specific crimping tool is required to perform the operation.

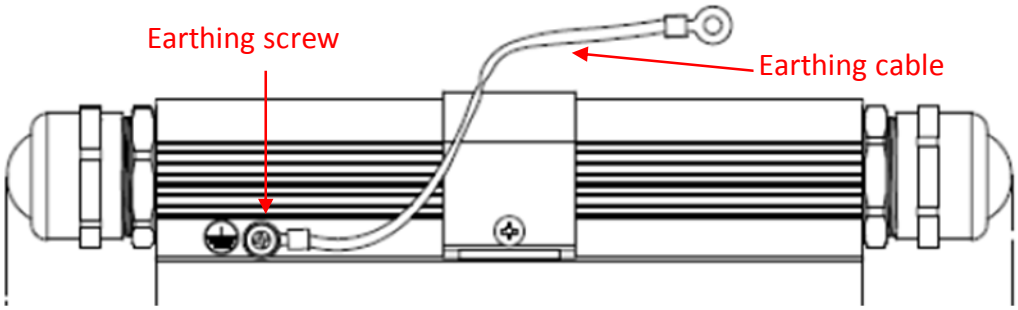

Figure 100 : Earthing of the outdoor Ethernet surge protection

Note 1: the earthing cables are not provided by KERLINK
Note 2: the earthing cables characteristics are detailed in §1.7.5.2.

4.6.1.5 Earthing of the outdoor PoE injector

On the outdoor PoE injector, the earthing connection is completed through a dedicated earthing bolt and two nuts.
The earthing connection on the cable is completed through a ring terminal. A specific crimping tool is required to perform the operation. The earthing cable must be crimped inside this ring terminal.
The ring terminal is inserted between the two nuts as follows:

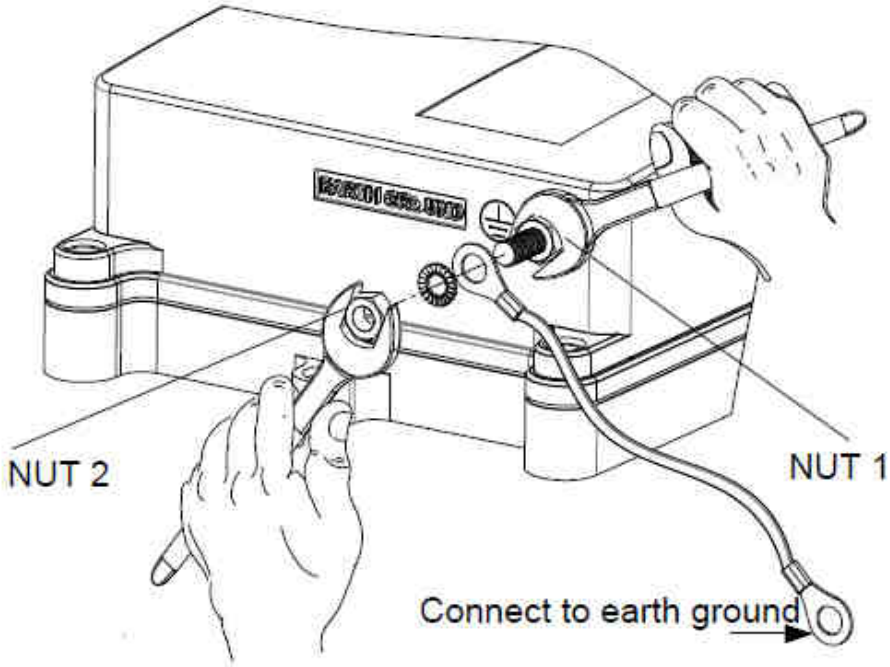

Figure 101 : Earthing of the outdoor PoE injector

Note 1: the earthing cables are not provided by KERLINK
Note 2: the earthing cables characteristics are detailed in §1.7.5.2.

4.6.2 RF antennas

RF antennas (GNSS, LTE and LoRa) are connected to the Wirnet iBTS through the N connectors on the bottom side of the enclosure.
In its default configuration, the standard casing features only 3 N-SMB adapters used as RF interfaces for the antennas:

- 1 for GNSS antenna (GPS)
- 1 for WAN antenna (GSM/HSDPA/LTE)
- 1 for LoRa antenna.

The N connectors are connected to the modules (CPU, WAN and Lora) through SMB-SMB or SMB-SMA coaxial cables. The coaxial cables must be carefully checked to make sure the right RF interface of each module is connected to the right N connector and therefore to the right antenna.
The N connectors are located as follows:

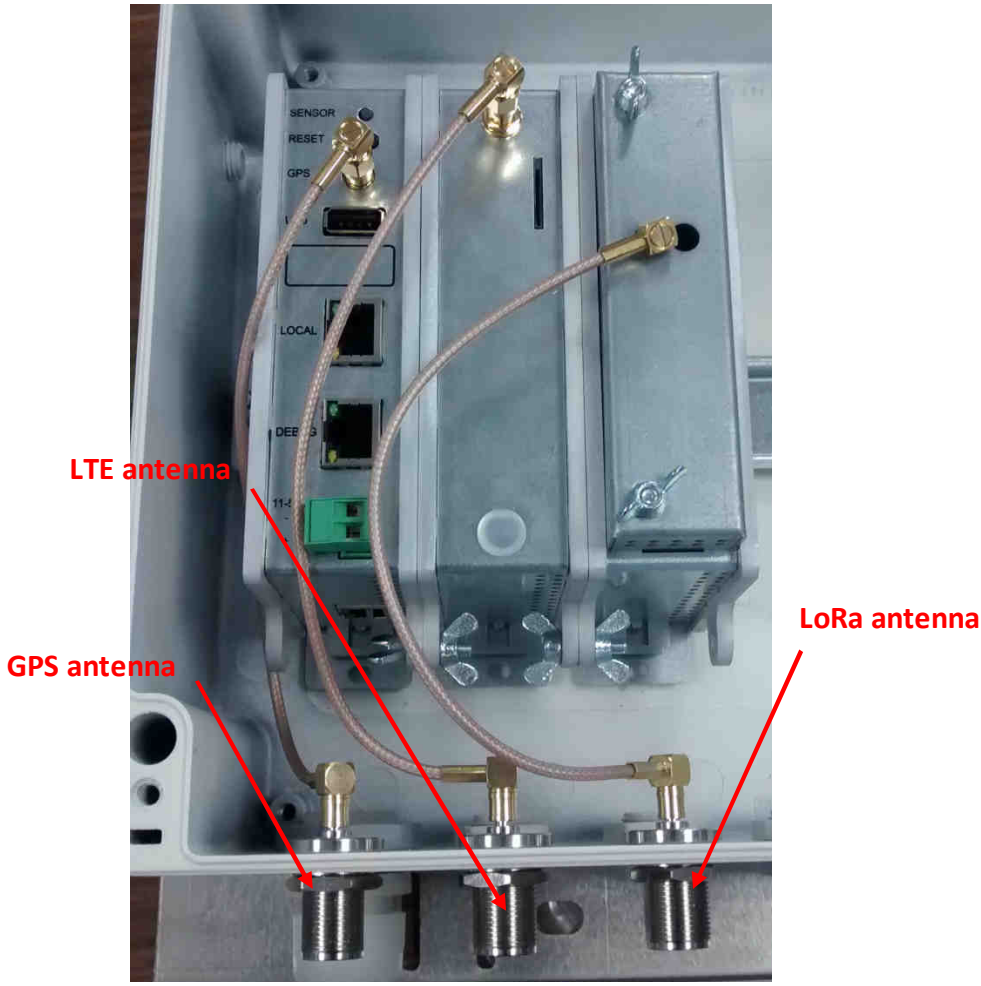

Figure 102 : nominal configuration of N connectors - standard casing

Therefore, in its nominal configuration, only one N connector is available for a single antenna.
If antenna diversity is required, or additional LoRa modules are required, then the installer has to add the missing modules inside the enclosure and mount the required N-SMB adapters on the bottom side of the enclosure. 8 x M16 blind stops are available for that purpose (see §4.4).
In order, to facilitate the installation, KERLINK recommends the following allocation of the M16 blind stops for the additional N-SMB connectors:

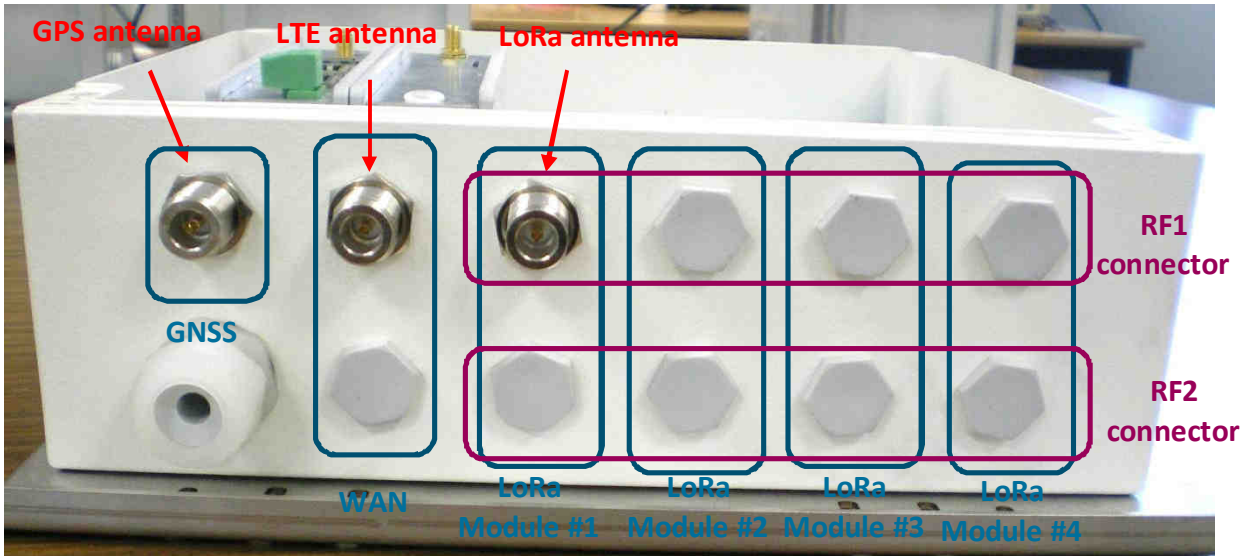

Figure 103 : Recommended allocation of the N connectors – Standard casing

Note: the bottom side of the enclosure does not include any label or any serigraphy to differentiate the N connectors. This is because of the full modularity of the Wirnet iBTS. We strongly recommend to the installer following KERLINK recommendations regarding the placement of the connectors to facilitate the installation. The installer must ensure that the right N connector is connected to the right SMB connector of the LoRa module and therefore to the right antenna!

In its default configuration, the compact casing features only one N-SMB adapters used as RF interfaces for the LoRa antenna:

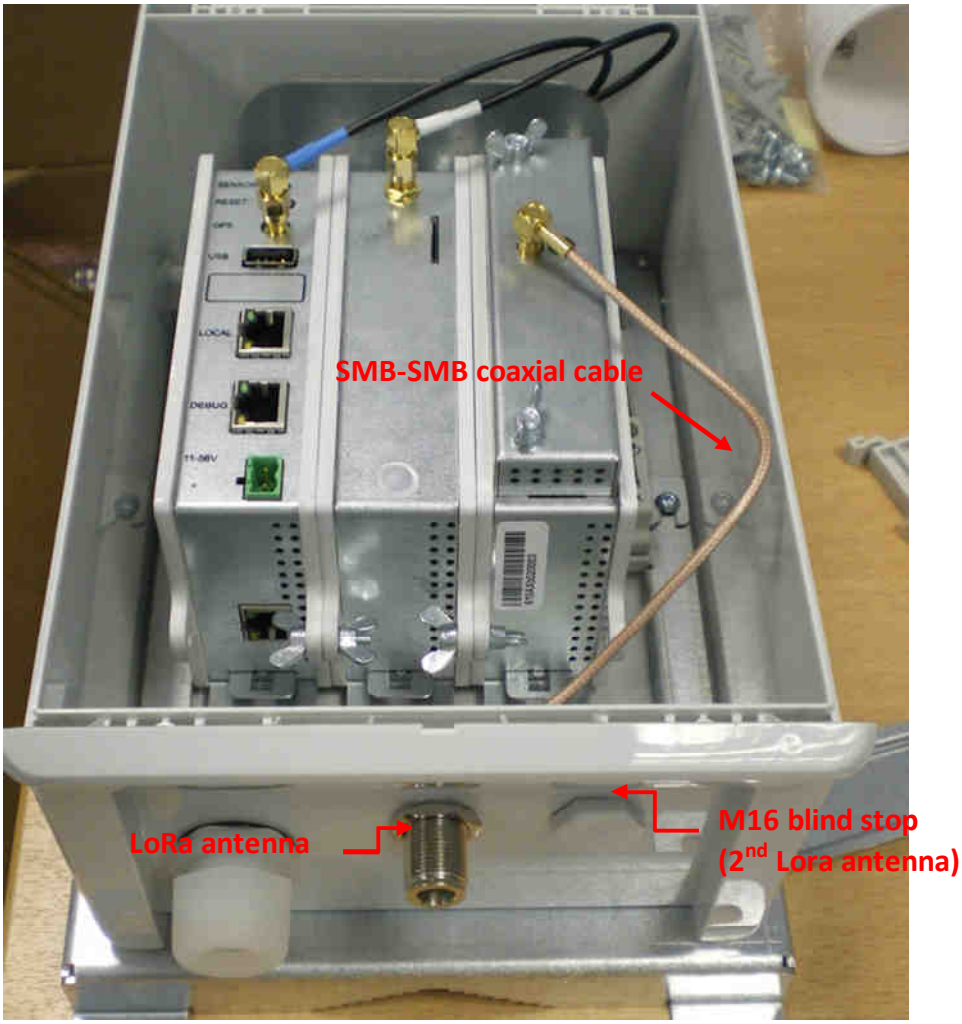

Figure 104 : Nominal configuration of N connectors - compact casing

If antenna diversity is required then the installer has to mount an additional N-SMB adapter on the bottom side of the enclosure. The M16 blind stop is available for that purpose.

4.6.2.1 GNSS antenna

Connect the N male connector of the GNSS antenna onto the dedicated N female connector as indicated below:

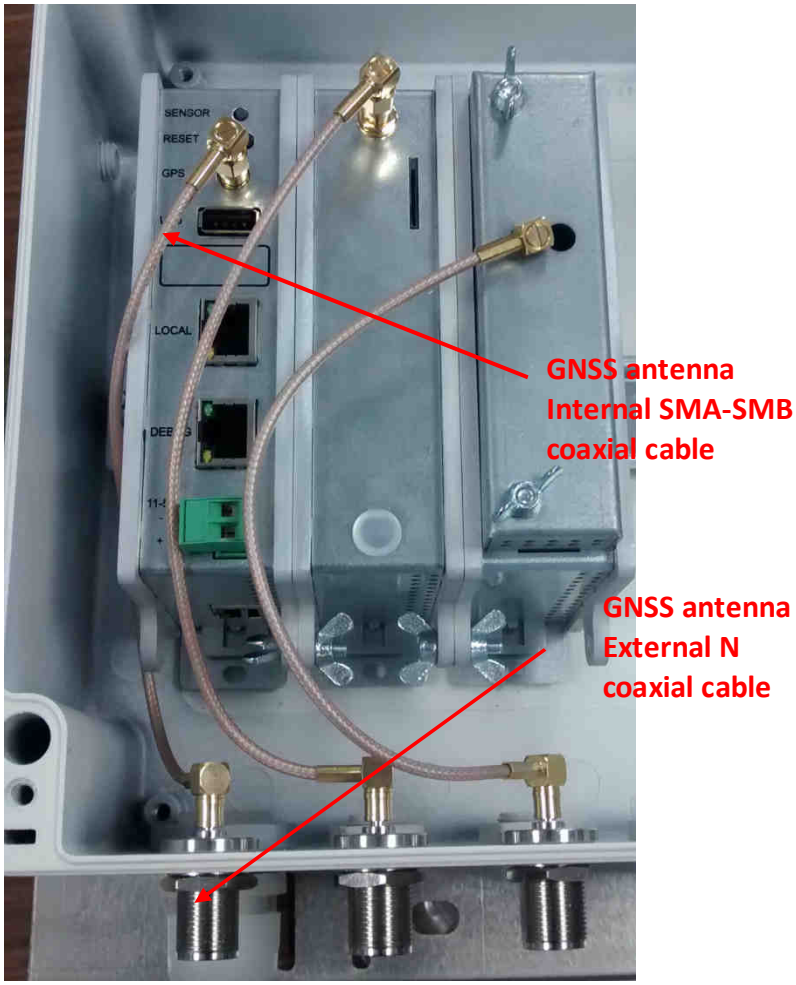

Figure 105 : GNSS antenna cabling, internal and external

Make sure the SMA-SMB cable inside the enclosure is properly connected to the CPU module.

4.6.2.2 LTE antenna

Connect the N male connector of the LTE antenna onto the dedicated N female connector as indicated below:

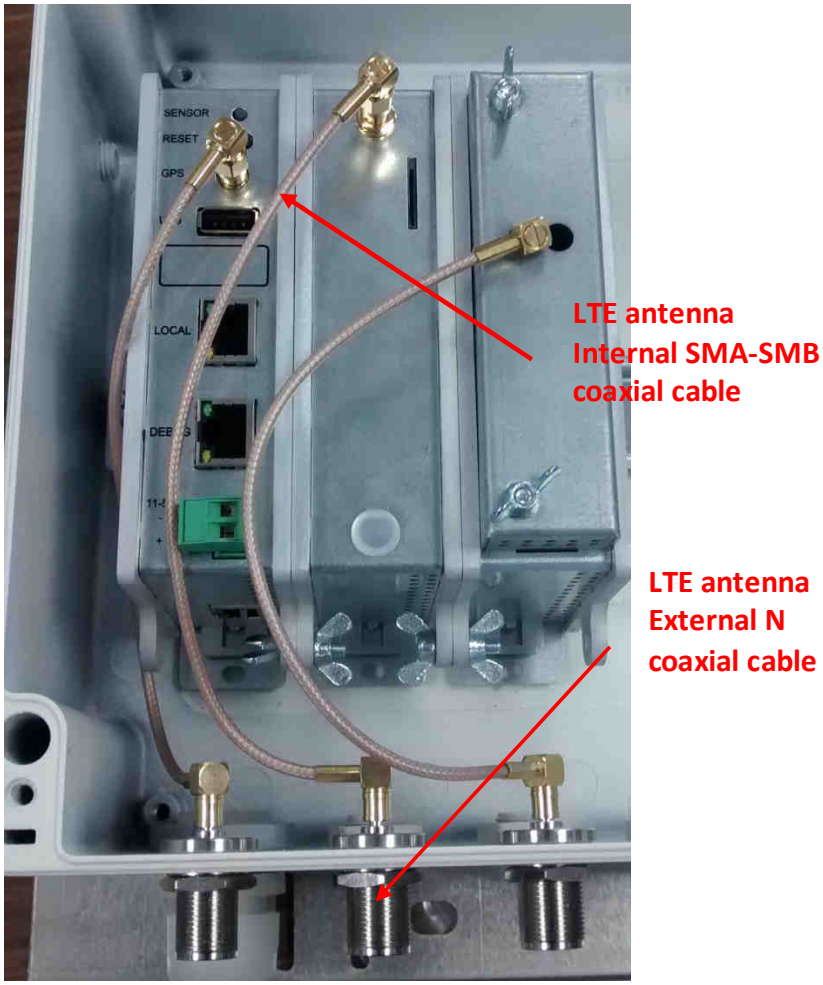

Figure 106 : LTE antenna cabling, internal and external

Make sure the SMA-SMB cable inside the enclosure is properly connected to the WAN module.

4.6.2.3 GNSS / LTE combo antenna

The Wirnet iBTS Compact is delivered with an internal GNSS/LTE combo antenna mounted on the internal bracket. Check the antenna is well mounted on the bracket and the SMA connectors are properly screwed on the modules, as described below:

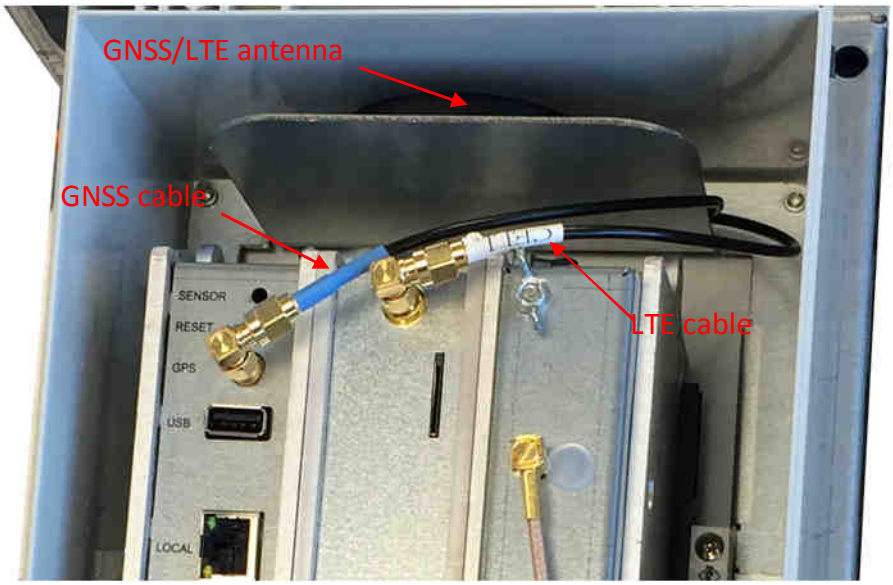

Figure 107 : GPS and LTE cabling within Wirnet iBTS Compact

The GNSS cable is the blue one, referenced as “GPS”, and connected to the CPU module.
The LTE cable is the white one, referenced as “CELL”, and connected to the WAN module.

4.6.2.4 LoRa RF Antenna

4.6.2.4.1 Common generalities

Several LoRa antennas can be used with the Wirnet iBTS as detailed in §1.7.2.
Once the antennas are mounted (see §4.5.2), a RF coaxial cable must be used to connect the antenna to the Wirnet iBTS.
The RF coaxial cable delivered by default is only 1m length. This is suitable for many installation but extension coaxial cables can be used when the distance between the LoRa antenna and the Wirnet iBTS is greater than 1 meter.

The RF coaxial cables have two N male connectors on each side. One side is screwed on the antenna N female connector and the other side is screwed on the N female connector on the bottom side of the Wirnet iBTS as follows:

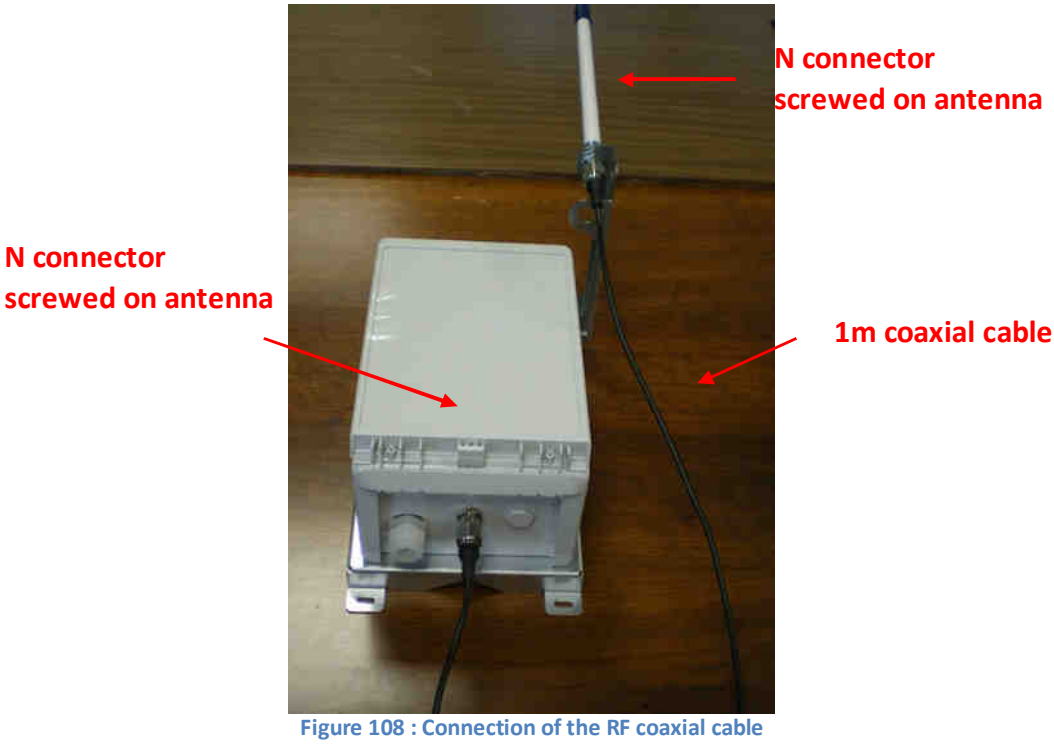

Figure 108 : Connection of the RF coaxial cable

To improve the durability of the RF connections against environmental aggression (moisture, pollution …), KERLINK recommends to protect connectors with an insulating tape like the reference 130C from 3M.

To tighten the coaxial cable of the Wirnet iBTS Compact, the installer can use cable clamps inserted in the dedicated slots of the mounting kit:

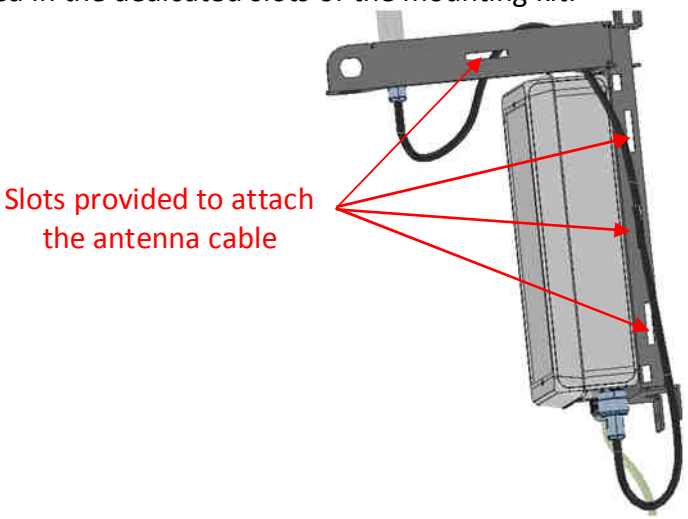

Figure 109 : attachment of the RF antenna coaxial cable

Several configurations of antennas are possible depending on the number of LoRa modules used. They are listed in the following paragraphs.

4.6.2.4.2 Single LoRa module / single omnidirectional antenna

In this configuration, the Wirnet iBTS receiver supports 16 channels.

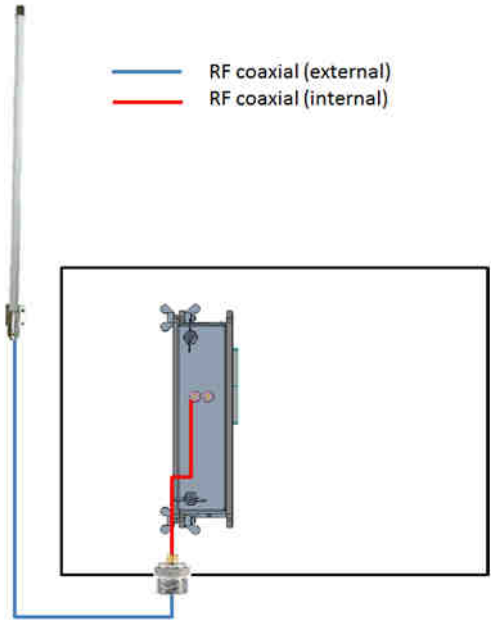

Figure 110 : Single LoRa module / single omnidirectional antenna connections

4.6.2.4.3 Single LoRa module / dual omnidirectional antennas / diversity

In this configuration, the Wirnet iBTS receiver supports 2 x 8 channels.
The distance between antennas must be optimized to offer the best reception (see §4.5.2.2.2).

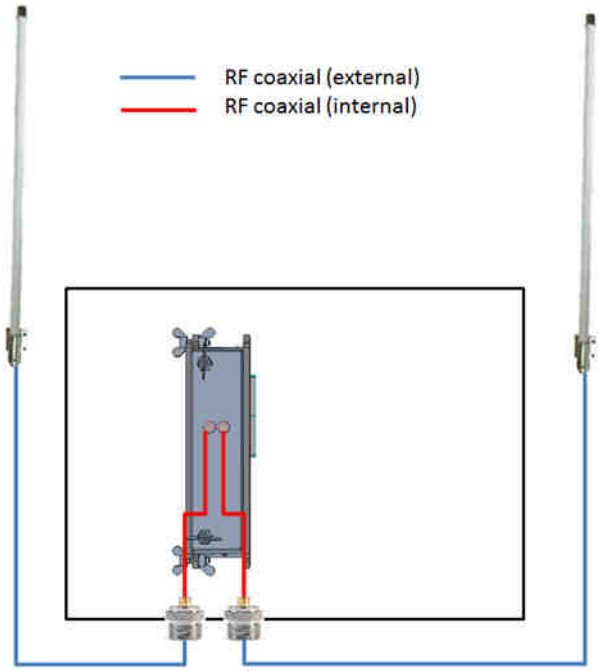

Figure 111 : Single LoRa module / dual omnidirectional antennas connections

4.6.2.4.4 Single LoRa module / single dual polarization antenna

In this configuration, the Wirnet iBTS receiver supports 2 x 8 channels.

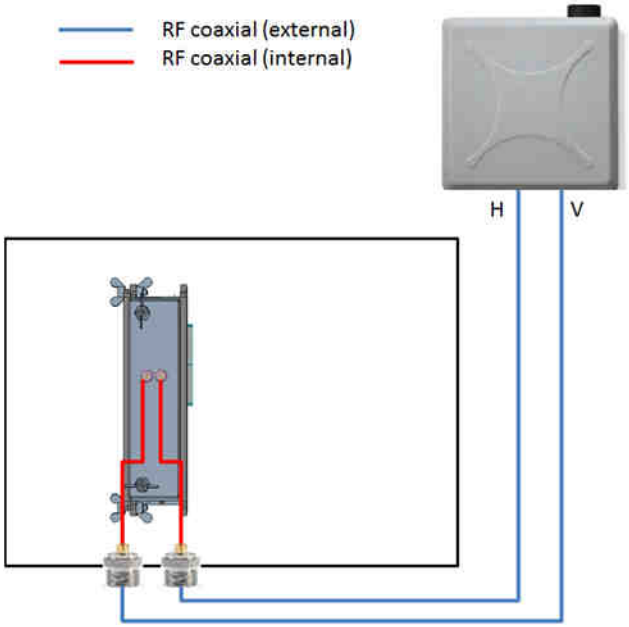

Figure 112 : Single LoRa module / single dual polarization antenna connections

4.6.2.4.5 Two LoRa modules / two omnidirectional antennas / diversity

In this configuration, the Wirnet iBTS receiver supports 2 x 16 channels.
The distance between antennas must be optimized to offer the best reception (see §4.5.2.2.2).

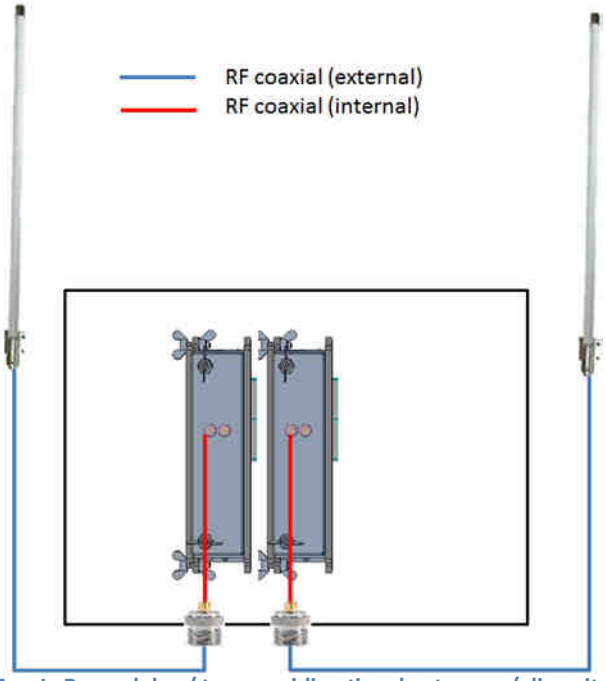

Figure 113 : Two LoRa modules / two omnidirectional antennas / diversity connections

4.6.2.4.6 Two LoRa modules / two dual polarization antennas

In this configuration, the Wirnet iBTS receiver supports 2 x 2 x 8 channels.

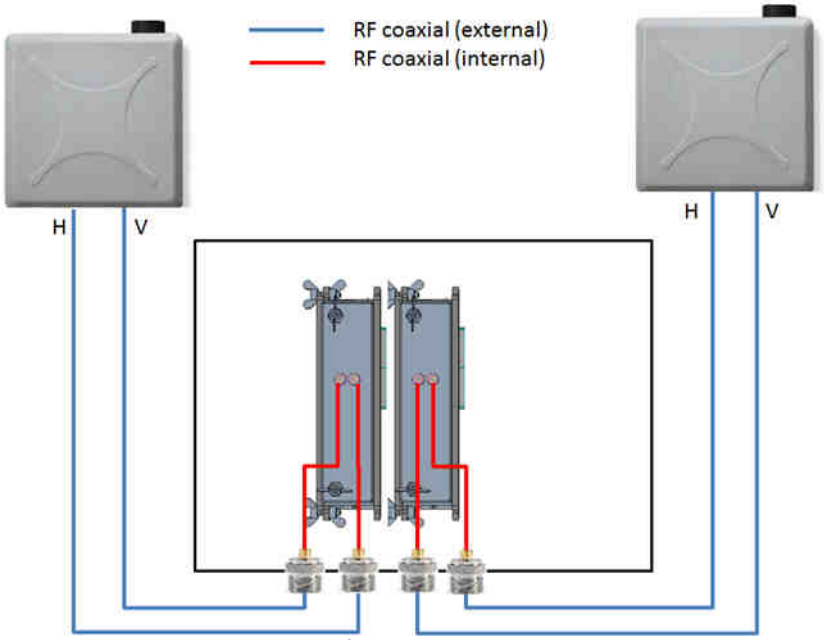

Figure 114 : Two LoRa modules / two dual polarization antennas connections

4.6.2.4.7 Three LoRa modules / three sectors antennas

In this configuration, the Wirnet iBTS receiver supports 3 x 16 channels.

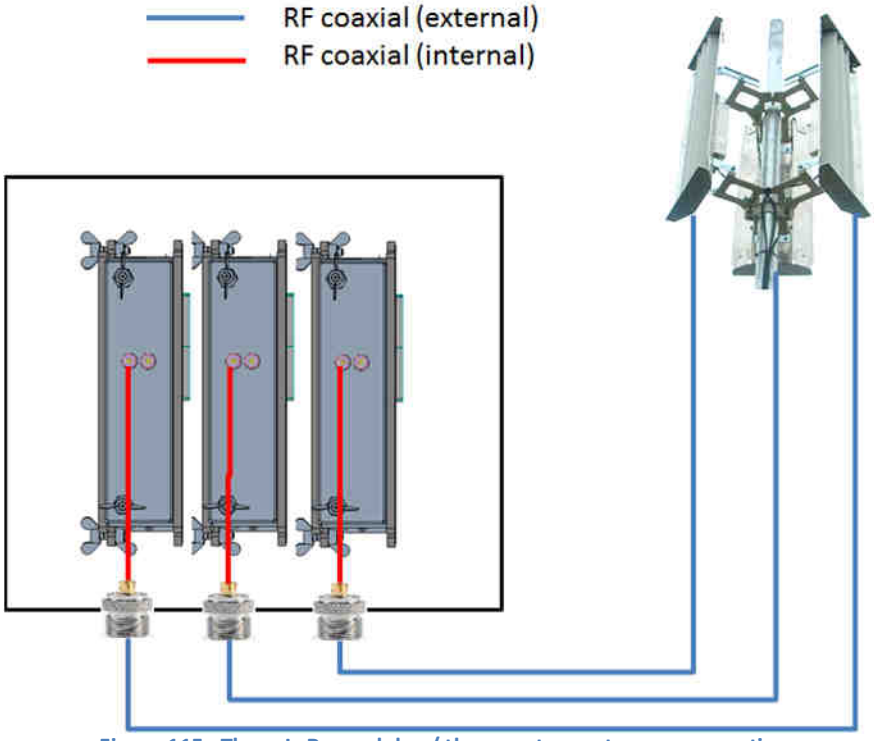

Figure 115 : Three LoRa modules / three sectors antennas connections

4.6.2.4.8 Three LoRa modules / three sectors antennas / dual polarization

In this configuration, the Wirnet iBTS receiver supports 3 x 2 x 8 channels.

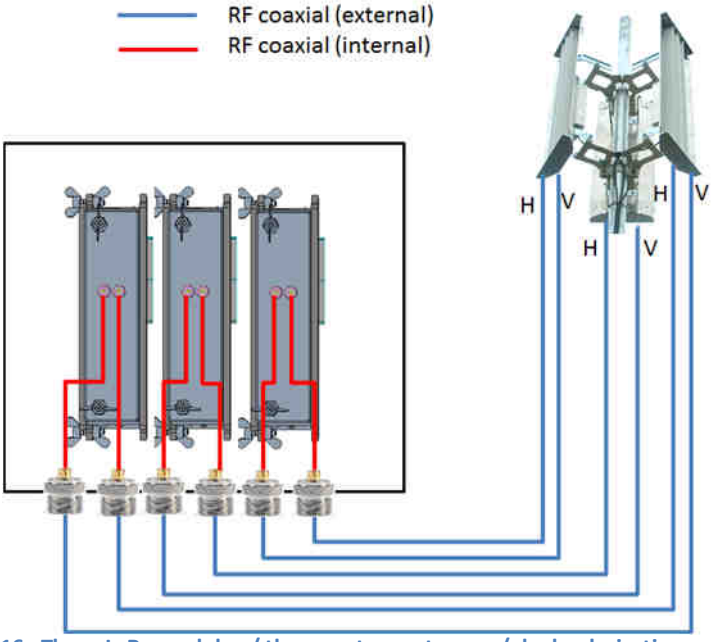

Figure 116 : Three LoRa modules / three sectors antennas / dual polarization connections

4.6.2.4.9 Four LoRa modules / single omnidirectional antenna

In this configuration, the Wirnet iBTS receiver supports 64 channels.

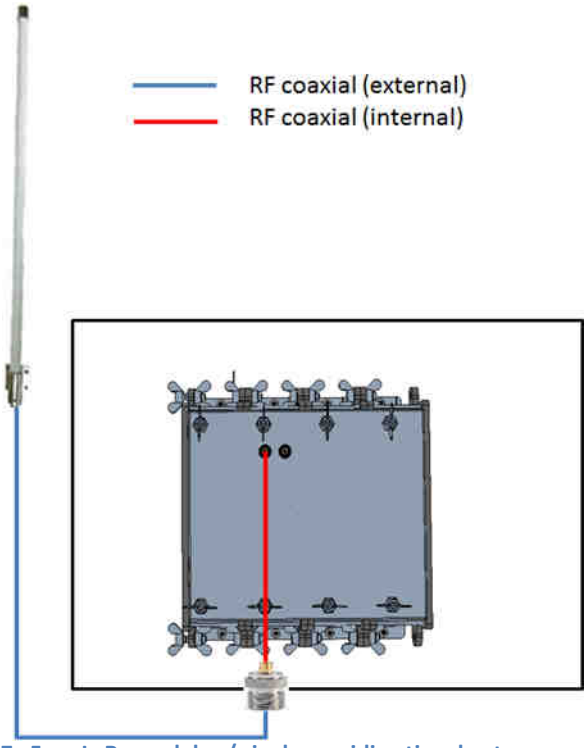

Figure 117 : Four LoRa modules / single omnidirectional antenna connections

4.6.2.4.10 Four LoRa modules / dual omnidirectional antennas / diversity

In this configuration, the Wirnet iBTS receiver supports 2 x 32 channels.

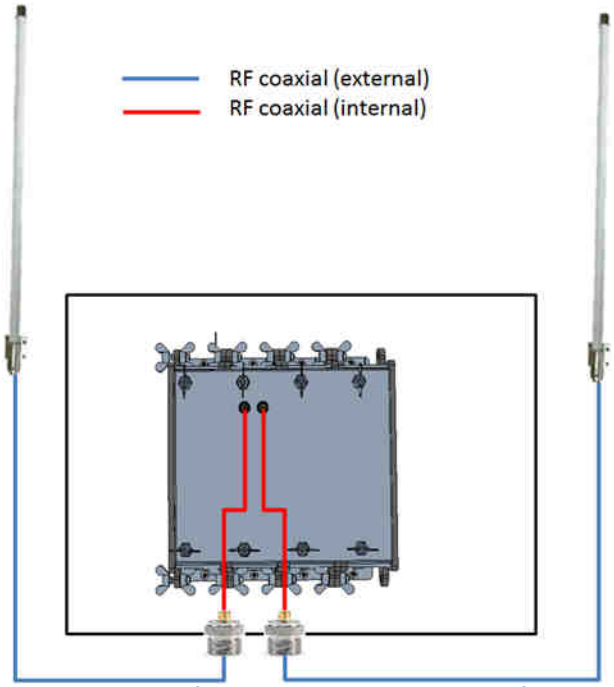

Figure 118 : Four LoRa modules / dual omnidirectional antennas / diversity connections

4.6.2.4.11 Four LoRa modules / dual polarization antenna

In this configuration, the Wirnet iBTS receiver supports 2 x 32 channels.

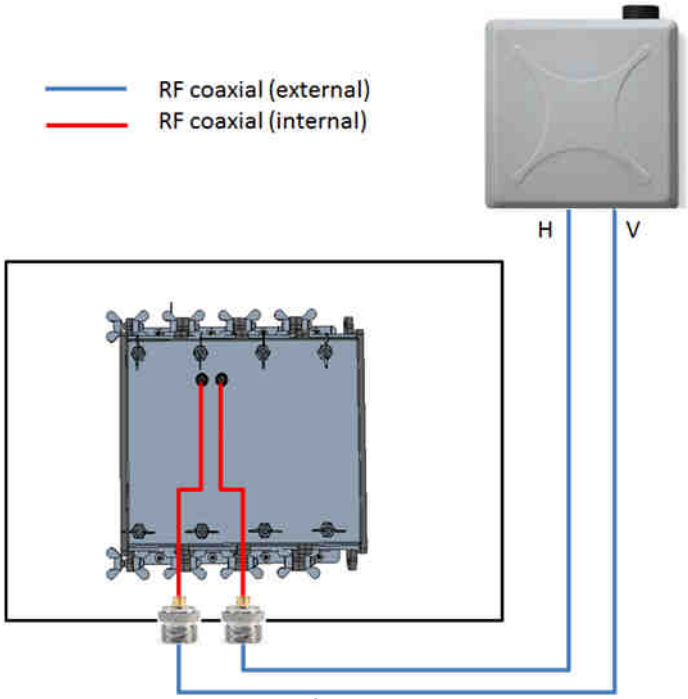

Figure 119 : Four LoRa modules / dual polarization antenna connections

4.6.3 Ethernet connection

The Wirnet iBTS gateway is supplied by a PoE injector through an Ethernet cable.
The PoE injectors are detailed in §1.7.1.1 and §1.7.1.2.
The recommended Ethernet cable is detailed in §1.7.5.1. It includes two RJ45 T 568A plugs on each side

Note 1: The Ethernet cable is not provided with the Wirnet iBTS.
Note 2: The maximum Ethernet cable length is 100m.

On Wirnet iBTS side, the Ethernet RJ45 connector must be firstly inserted through the M25 cable gland as shown on the Figure 120.
To introduce the RJ45 cable into the cable gland, follow the procedure below:

- Unscrew the external nut
- Remove the seal
- Introduce the RJ45 cable into the external nut
- Place the seal around the RJ45 cable
- Introduce the RJ45 cable into the cable gland body
- Connect the RJ45 connector in to the PoE/LAN port of the CPU module
- Replace the seal in the cable gland body
- Screw the external nut

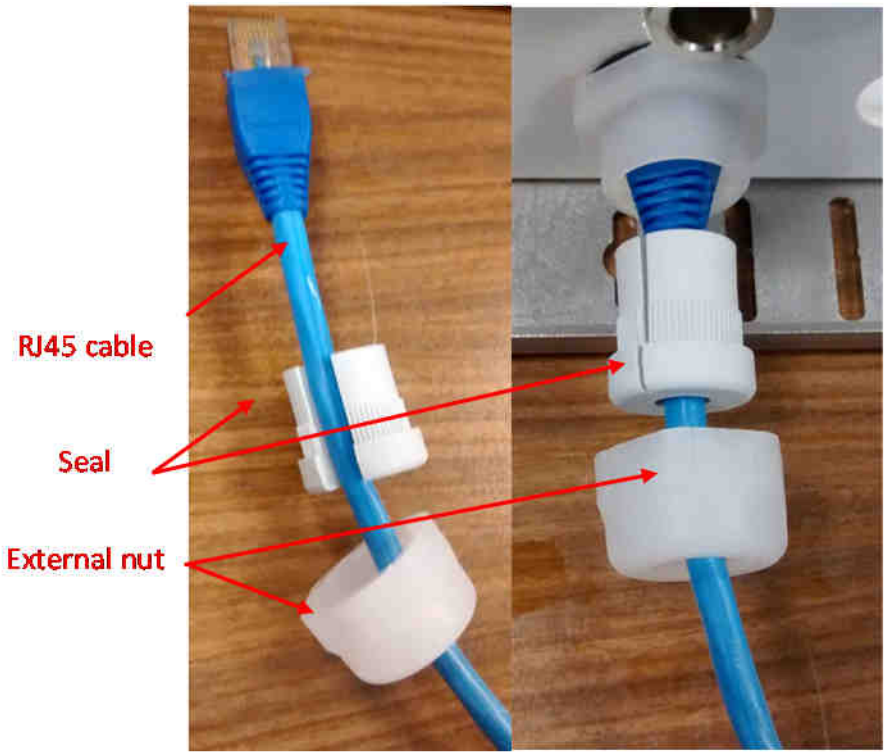

Figure 120 : Ethernet connection on Wirnet iBTS side / cable gland

Note 3: The cable gland allows external cable diameter (cable and RJ45 connector) from 5mm to 8 mm.

An example of RJ45 connector inserted to the PoE/LAN port of the CPU module is shown below:

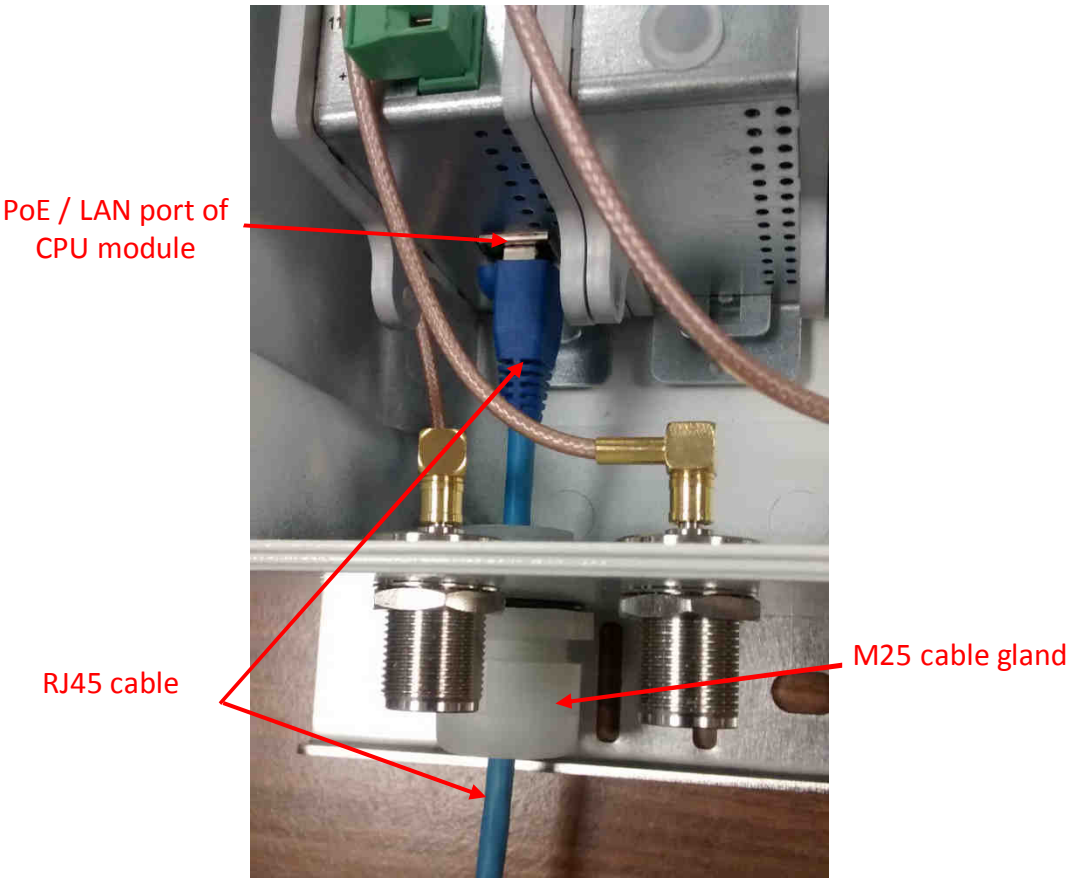

Figure 121 : Ethernet connection on Wirnet iBTS side

On the other side of the Ethernet cable, the RJ45 connector must be inserted into the RJ45 "Data + Power" port of the POE injector. This POE injector is connected to 230VAC mains supply as detailed in §4.3.2.

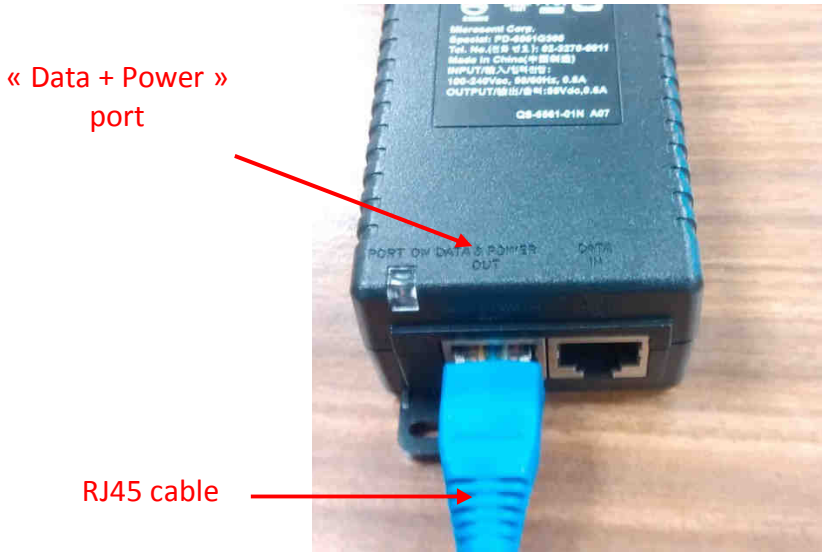

Figure 122 : Ethernet connection on PoE injector side

Note 4: the PoE injector must be connected to the mains supply through a main electrical board with surge protections type 1 and a secondary electrical board with surge protections type 2 as detailed in §4.3.2.

Note 5: the PoE injectors detailed in §1.7.1.1 and §1.7.1.2 are intended for indoor applications only.

Note 6: If the electrical installation does not include surge protections type 1 and 2, then an outdoor PoE injector featuring better surge protection is required. These outdoor PoE injector are detailed in §1.7.1.3 and § 1.7.1.4.

4.6.4 Mains supply

The PoE injectors detailed in §1.7.1.1 and §1.7.1.2, are provided with E/F type cable (Europe) or B type cable (USA).
Insert the plugs to the mains receptacle of the electrical installation.

Note: the E/F type or B type plugs must be inserted into the mains receptacle only once all other connections are settled and USIM card inserted (see §4.7).

4.6.5 Auxiliary power supply

The Wirnet iBTS can be also supplied with an auxiliary DC power supply as a solar panel for instance. The input voltage range is 11 to 56VDC. A 24V DC solar system is then recommended for optimized performance.
A two-wires cable is required to interconnect the auxiliary power supply connector.

The auxiliary power supply connector is a Euroblock plug, which is located on the front side of the CPU module. The polarity of the power signals are indicated besides the connector, as shown below:

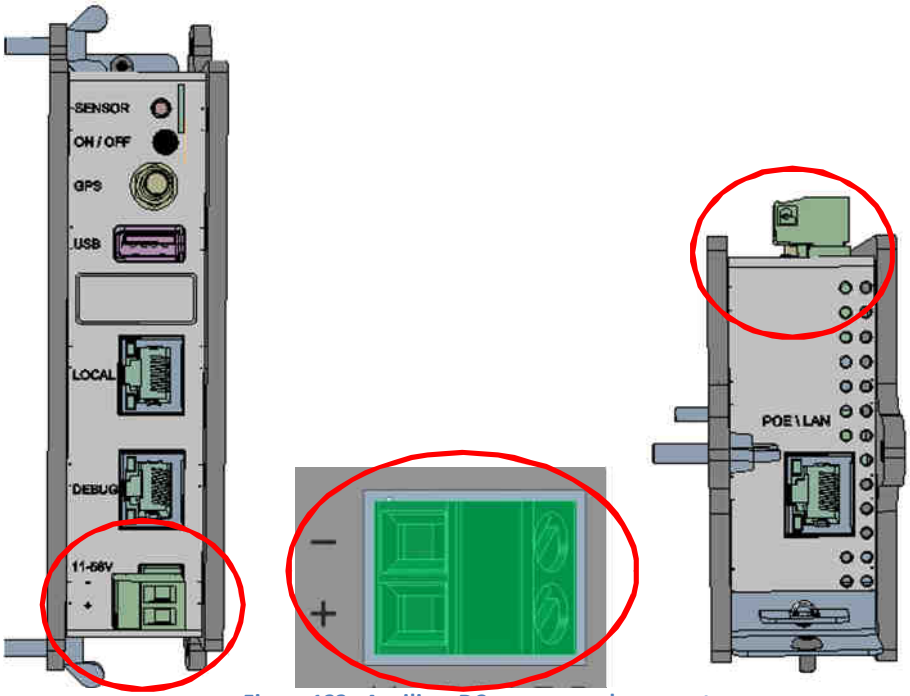

Figure 123 : Auxiliary DC power supply connector

First, the auxiliary power supply cable must be introduced into the enclosure through a cable gland. The operator needs to determine which cable gland can be used for this operation:

- M25 cable gland can be used for that purpose if the Ethernet cable is no longer required (LTE backhaul only).
- If the Ethernet cable is required, then a M16 cable gland must be used. One M16 blind stops must be removed and replaced by the M16 cable gland.

Note 1: The M16 cable glands are not provided by KERLINK.

The M25 cable gland allows external cable diameter from 5mm to 8 mm.
The M16 cable glands allows external cable diameter from 4mm to 8 mm.

After insertion through the cable gland, the 2-wire cable can be screwed to the dedicated Euroblock plug as described on the Figure 123, according to the defined polarity.

Note 2: the Euroblock plug must be inserted into the Euroblock receptacle only once all other connections are settled and USIM card inserted (see §4.7).

Note 3: the external power supply must be a limited power source.

4.7 Commissioning

4.7.1 USIM card

The USIM card is mandatory to establish the LTE/3G/GPRS communications.
The USIM card to be used with the Wirnet iBTS must be a 2FF format.
KERLINK recommends the usage of a M2M UICC compliant with 3GPP TS 102.671. It offers then a better temperature operating range, improved data retention and increased number of UPDATE commands.

Before inserting the USIM card, pay attention that the Wirnet iBTS is unpowered by checking that all LEDs of the CPU module are OFF.

USIM card insertion is based on a push-push mechanism.

Then, to insert a USIM card in the WAN module, follow the procedure:

- Open the enclosure (see §4.1)
- Insert carefully the USIM card in the WAN module respecting the USIM orientation drawn besides the connector and as shown below
- Push the USIM card and released pressure until a “click” can be heard.

Figure 124 : USIM Card

In case of replacement of the USIM card, the power supply must be firstly switched off by disconnecting Ethernet wires or disconnecting the POE injector. For few seconds, the Wirnet iBTS is still powered-on due to the internal backup battery. Wait and check the LEDs are switched off before extracting the USIM card.
Simply push the USIM card to extract it from the WAN module.

After inserting the new USIM card as described above, the Wirnet iBTS can be re-powered on again.
In case of change of mobile operator, APN and login/password must be updated. This can be done through USB update or through the local maintenance Web interface.
For more details, contact KERLINK.

4.7.2 Power ON

Once the RF antenna(s) and the Ethernet cable are connected and the USIM card is inserted, the Wirnet iBTS can be powered ON.
To POWER ON the Wirnet iBTS, connect the POE injector onto the 230VAC mains supply.

4.7.3 Functional check

To ensure the Wirnet iBTS is started up, check the behavior of the LED indicators on the CPU module:

Connector	LED	Description
LOCAL	Green	Ethernet data activity
LOCAL	Orange	Ethernet Link
PoE/LAN	Green	Ethernet data activity
PoE/LAN	Orange	Ethernet Link
DEBUG	Green	Power status
DEBUG	Orange	Software status/ activity

When the Wirnet iBTS is powered ON then, all the LED are switched ON during seven seconds.
Then the DEBUG green LED must be ON to indicate the power supplies are OK.
The DEBUG orange LED is blinking very fast during two seconds at the end of the boot.
Once the boot is completed and the Wirnet iBTS is in nominal configuration, then the DEBUG orange LED is blinking every 5 seconds.

Then, to check and analyze the status of the Wirnet iBTS, a standard laptop can be connected to the LOCAL RJ45 connector of the CPU module or the LOCAL RJ45 connector of the PoE injector. Once connected, run the maintenance Web interface as explained in chapter 5.3.4.

4.7.4 Configuration

A local maintenance Web interface is available to perform the specific configuration (IP address…). The maintenance Web interface is described in chapter 5.3.4.

4.8 Lighting protections

In its standard configuration, the Wirnet iBTS is provided with optimal internal surge protections. In harsh environment, additional protections may be used to improve lightning immunity. The Wirnet iBTS gateways are not warranted by KERLINK in case of deterioration due to lighting. KERLINK recommends adding surge protections, especially in high keraunic levels areas and on high points.

The lighting surge protection must be completed on three interfaces to be efficient:

- Mains supply
- Ethernet (PoE) cable
- RF coaxial cable (antenna interfaces)

Another key parameter for an efficient lighting surge protection is “earthing”. The earthing connection insures that the lighting surge is driven to the ground properly.

Earthing of the installation is mandatory for:

- indoor installation (mains supply, PoE injector)
- outdoor installation (tower, pole, …)

The following figure describes the lighting protections that are required in a high keraunic area configuration:

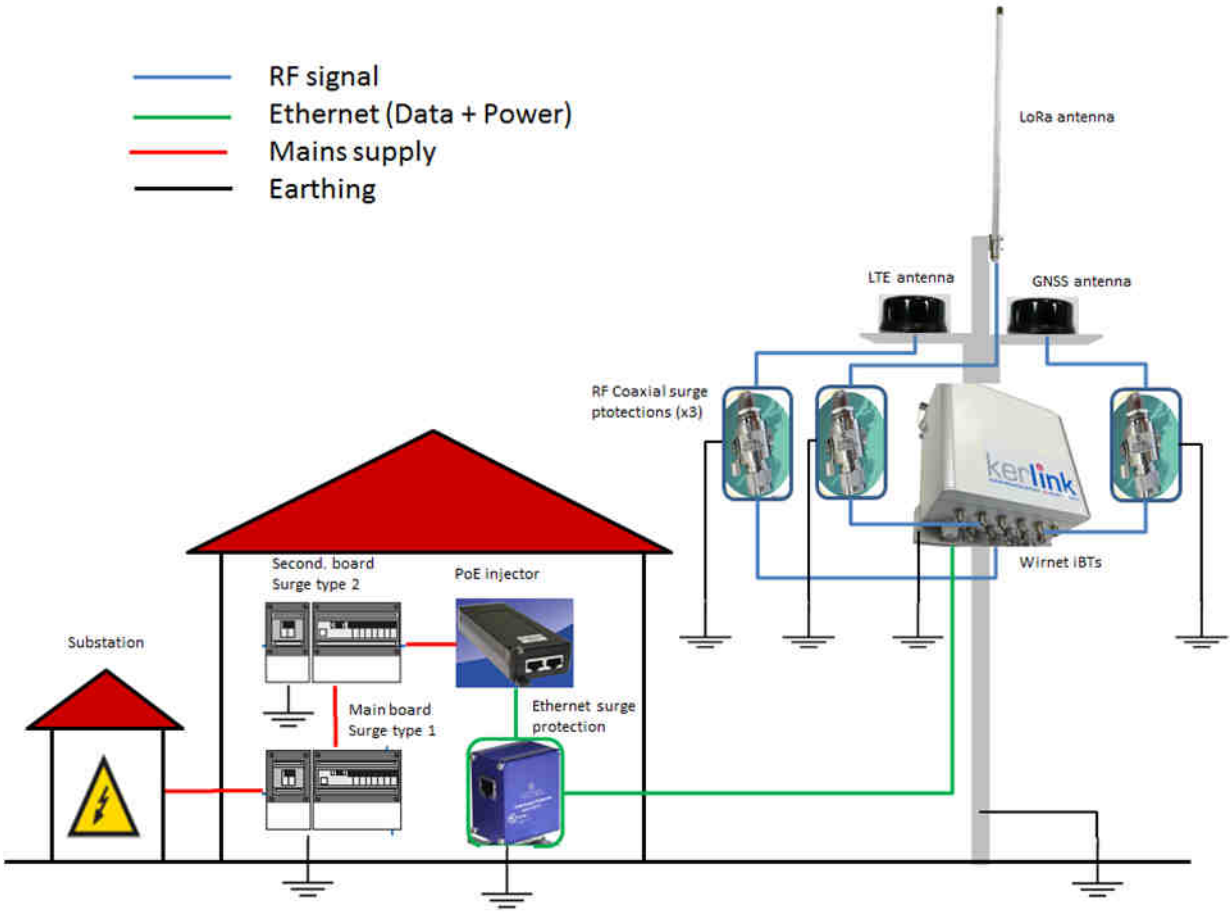

Figure 125 : Installation with recommended lighting protections

The installation is composed of two separated areas: indoor installation and outdoor installation.
The indoor installation is composed of:

- A main electrical board including:
  - a circuit breaker
  - a surge protection type 1
  - a connection to “earth”
- A secondary electrical board including:
  - a circuit breaker
  - a surge protection type 2
  - a connection to “earth”
- The PoE injector (see §1.7.1.1 and §1.7.1.2)
- An Ethernet surge protection, connected to “earth” (see §1.7.6.2)

The outdoor installation is composed of:

- A tower, mast or pole that must be connected to “earth”.
- The Wirnet iBTS and its mounting kit.

The mounting kit must be connected to earth.

- The antennas (LoRa, LTE, GNSS) with their RF coaxial surge protections (see §1.7.6.1) connected to “earth”.

A lighting rod with a down conductor to earth is strongly recommended for this kind of applications. The lighting rod avoids direct impacts on the aerials (antennas and Wirnet iBTS).

Note 1: the PoE injector must be connected to the mains supply through a main electrical board with surge protections type 1 and a secondary electrical board with surge protections type 2. If the electrical installation does not meet those requirements, use an alternate PoE injector featuring better surge protection. Contact KERLINK for more information.

Note 2: the PoE injector is intended for indoor applications only.

Note 3: the Ethernet surge protection is intended for indoor applications only.

In some use cases the electrical installation does not have the required surge protections type 1 and type 2. Also, the PoE injector and Ethernet surge protection could not be installed indoor. Therefore, an alternate PoE injector and an Ethernet surge protection dedicated to outdoor applications are required. These are detailed in §1.7.1.3, § 1.7.1.4 and §1.7.6.3.
In this use case, the installation is still composed of two separated areas: indoor installation and outdoor installation.

The indoor installation is composed of:

- A main electrical board including:
  - a circuit breaker
  - a surge protection type 1
  - a connection to “earth”

The outdoor installation is composed of:

- A tower, mast or pole that must be connected to “earth”.
- The Wirnet iBTS and its mounting kit.

The mounting kit must be connected to earth.

- The antennas (LoRa, LTE, GNSS) with their RF coaxial surge protections (see §1.7.6.1) connected to “earth”.
- The PoE injector (see §1.7.1.3 and § 1.7.1.4)
- An Ethernet surge protection, connected to “earth” (see §1.7.6.3.)

A lighting rod with a down conductor to earth is still strongly recommended for this kind of applications to avoid direct impacts on the aerials.

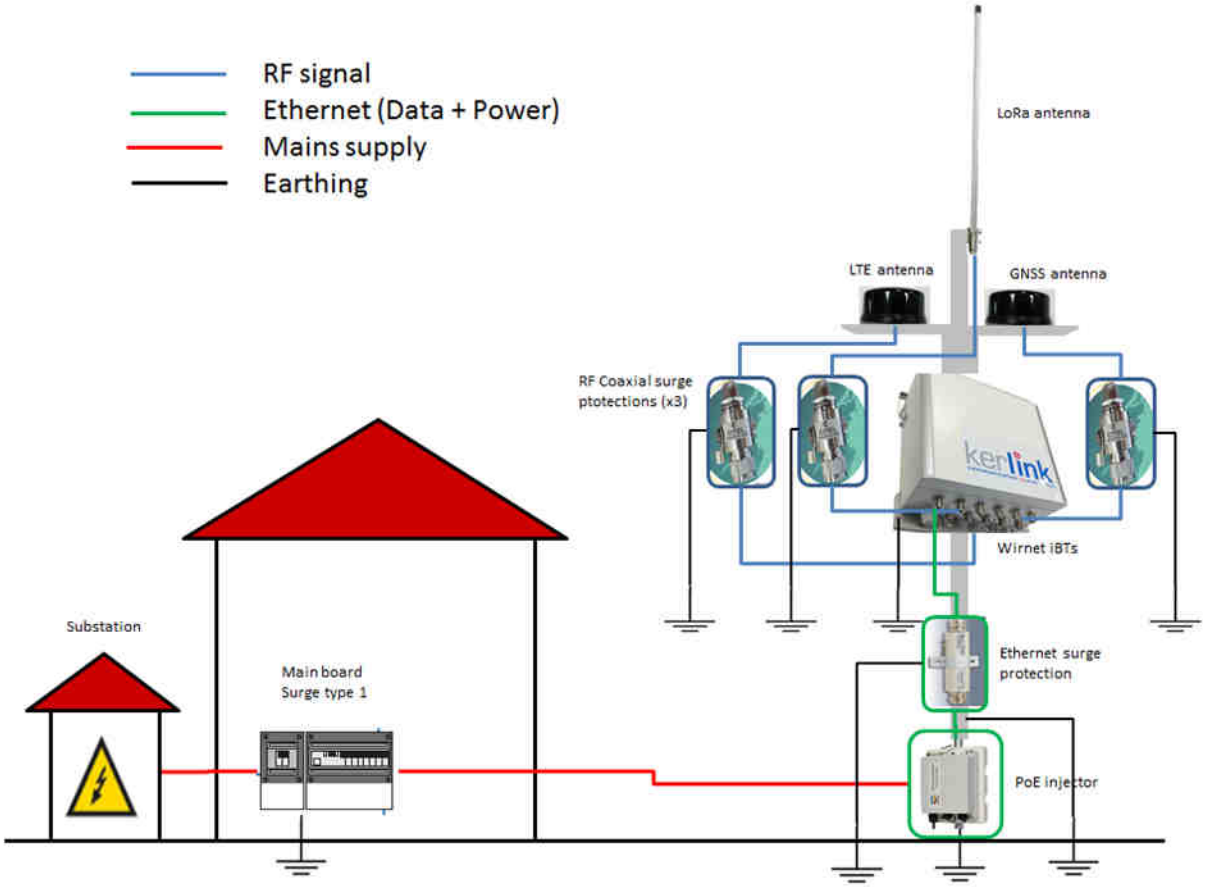

Figure 126 : Installation with recommended lighting protections / Outdoor PoE injector

Note 1: the outdoor PoE injector and Ethernet surge protectors have cable glands to insure the ingress protection. RJ45 connectors must be inserted into the POE injector through the cable glands.

Note 2: in both use cases, the earthing cables for the PoE injector, Ethernet surge protection, RF coaxial surge protection and Wirnet iBTS mounting kit are not provided by KERLINK.

5. Maintenance of the Wirnet iBTS

5.1 Simple checks

5.1.1 Wirnet iBTS enclosure

Check the robustness of the installation:

- Screwing of the Wirnet iBTS station on the mounting kit
- Screwing of the mounting kit (depends on the configuration)

Check the Ingress Protection of the enclosure:

- No trace of water inside the enclosure
- Tightening of the cable gland
- Tightening / screwing of the N connectors
- Tightening of the pressure stabilizers
- Tightening / screwing of the blind stops
- Gasket on the door

5.1.2 User interface

Check the USIM is properly inserted in the USIM connector of the WAN module
Check the LED indicators on the CPU module inside the enclosure:

Connector	LED	Description
LOCAL	Green	Ethernet data activity
LOCAL	Orange	Ethernet Link
PoE/LAN	Green	Ethernet data activity
PoE/LAN	Orange	Ethernet Link
DEBUG	Green	Power status
DEBUG	Orange	Software status/ activity

5.1.3 Cables and antennas

Check tightening and cabling of the antennas:

- The coaxial cables of LoRa, GNSS (GPS) and LTE antennas are well screwed and tightened on the Wirnet iBTS N connectors.
- The coaxial cables of LoRa, GNSS (GPS) and LTE antennas are not deteriorated.
- The LoRa, GNSS (GPS) and LTE antennas are well screwed and tightened on their brackets.
- The antenna brackets are well tightened to the wall or pole.
- RJ45/PoE cable is not deteriorated.

Check earthing of the installation:

- Antennas + mounting kit earthing cables are connected and not deteriorated.
- Wirnet iBTS + mounting kit earthing cable is connected and not deteriorated.
- Surge protectors earthing cables are connected and not deteriorated.

Check cabling inside the enclosure:

- The SMB and SMA cables are correctly connected to the modules and to the SMB/N adapters.
- RJ45/PoE connector is properly inserted in the CPU module
- Auxiliary supply wires (optional) are correctly inserted and screwed in the Euroblock connector of the CPU module

5.1.4 PoE injector

Check the RJ45 connectors of the Ethernet cables are properly inserted into the PoE injector

Check the LED indicator on the indoor 30W PoE injector:

- Yellow: AC Power OK but Channel Power KO -> defect
- Green: AC Power OK and Channel Power OK -> no defect
- None: no AC Power -> defect

Check the LED indicators on the indoor 60W PoE injectors:

- Yellow: AC Power OK but Channel Power KO -> defect
- Green: AC Power OK and Channel Power OK -> no defect
- None: no AC Power -> defect

5.2 Adding or replacing a module

To replace a module or add a module, follow the procedure detailed in §4.4.

5.3 Interfaces for debug or maintenance purposes

5.3.1 Proprietary debug interface

The Wirnet iBTS station has a proprietary serial debug interface named DEBUG located on the front side of the CPU module.
This debug interface is intended to be used by authorized and qualified personnel only.

Be careful: Only specific equipment developed by KERLINK must be connected to this interface.

The Wirma2 Debug Tool is intended to be connected to the debug interface. This tool is detailed in §1.7.8. It can be ordered to KERLINK as part of the accessories (see §6).
An Ethernet cable is required to connect the Wirma2 Debug Tool to the RJ45 DEBUG connector of the CPU module. A USB2.0 type A to type B male cable is also required to connect the Wirma2 Debug Tool to a computer. Both cables can be provided by KERLINK as accessories (see §6).

The connections of the Wirma2 Debug Tool to the CPU module and the computer are detailed on the following picture:

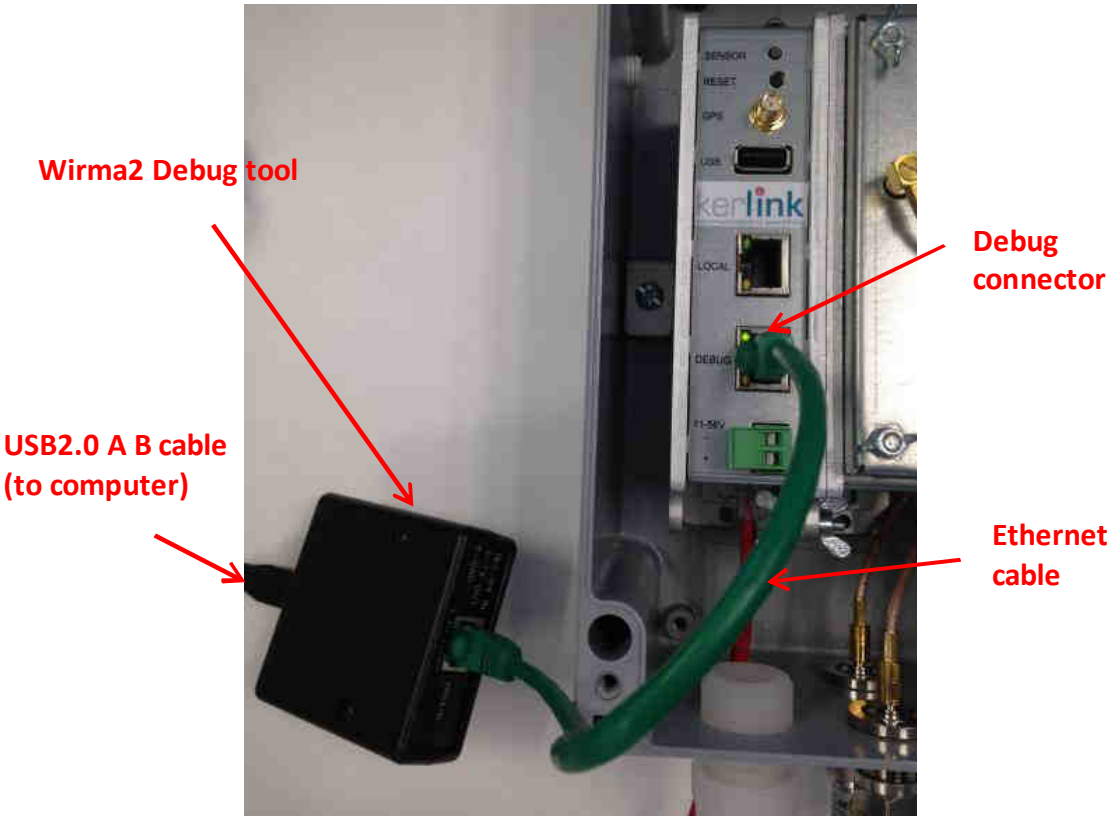

Figure 127 : Wirma2 Debug tool connected to the Wirnet iBTS

Use HyperTerminal or Teraterm on the computer to visualize the traces.

The serial port must be configured as follows:

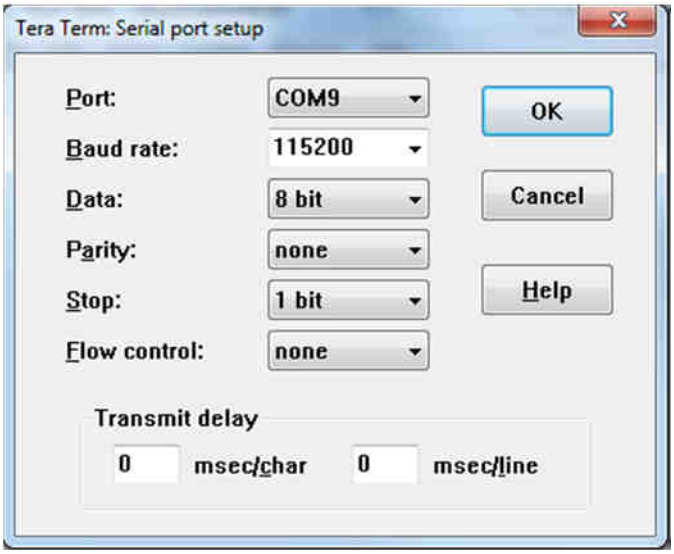

Figure 128 : Serial port configuration

Note 1: COM port number must be adjusted depending on which serial port is used on the computer.

Note 2: It is also possible to access to the debug interface by Ethernet connection by connecting directly to the POE injector or the Ethernet switch (depending on the installation topology).

Note 3: request default login/password to KERLINK.

5.3.2 USB interface

Firmware upgrade can be performed with a USB key via the USB type A connector. The connector is located on the CPU module as described below:

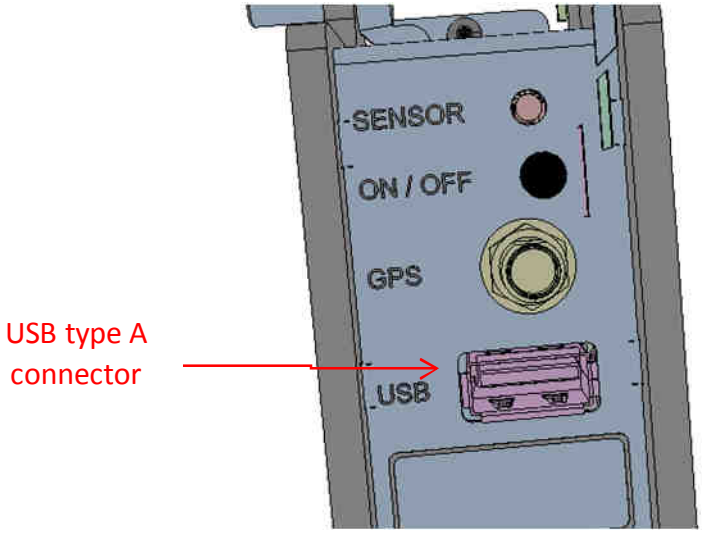

Figure 129 : USB connector of the Wirnet iBTS

5.3.3 ON/OFF button

An ON/OFF button is located on the front side of the CPU module:

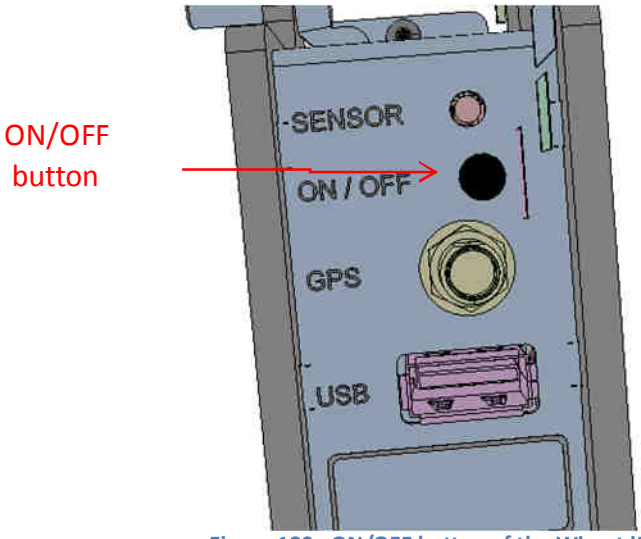

Figure 130 : ON/OFF button of the Wirnet iBTS

This button is intended to perform a hard reboot, power down and power on of the Wirnet iBTS:

- Press the button once to complete the hard reboot of the Wirnet iBTS
- Long press the button during 5 seconds min to power down the Wirnet iBTS
  Wait the shutdown of the Wirnet iBTS i.e. until the LEDs are switched off. The shutdown may take up to 30s depending on the current software activity.
- Press the button once again to power on the Wirnet iBTS when powered off.

If the shutdown is not completed properly, or may take longer than expected or if the Wirnet iBTS is under fault for any expected reason then:

- Long press the button during 5 seconds min to power down the Wirnet iBTS
- Wait the shutdown of the Wirnet iBTS i.e. until the LEDs are switched off.
- Press the button once again to restart the Wirnet iBTS.

5.3.4 Local WEB maintenance interface

A LOCAL Ethernet RJ45 connector is located on the front side of the CPU module:

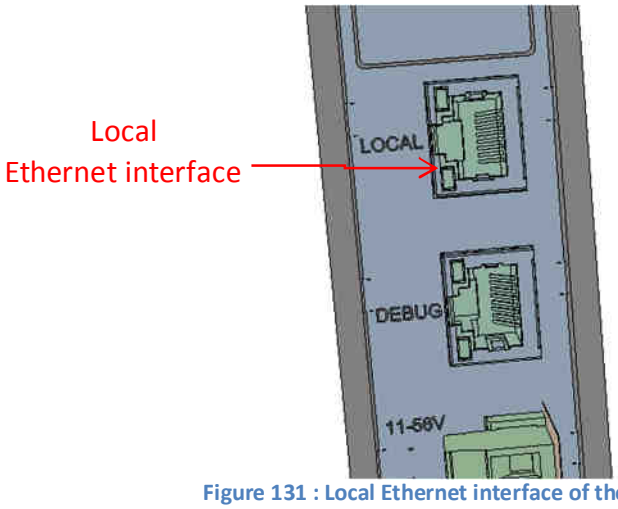

Figure 131 : Local Ethernet interface of the Wirnet iBTS

This RJ45 Ethernet connector is dedicated to the Web maintenance of the Wirnet iBTS.
Local WEB maintenance interface availability depends on the software package.

If the software package embeds this application, the following services are available:

- Board diagnostic (voltage, firmware version, memory and processor usage…)
- Configuration : network, radio, security credentials
- Firmware upgrade
- Linux SSH console session
- Real time radio spectrum scanning

The two main operations to be completed when installing the Wirnet iBTS are:

- configuring the network to access the server
- configuring the security

These operations are described below. Consult the local WEB interface documentation for other operations.

5.3.4.1 Configuring network parameters

The network bearer selection can be performed through Ethernet, LTE and WLAN, according to available WAN modules plugged inside the gateway:

- Ethernet :
  - IP mode : DHCP or static
  - IP address (if static mode)
  - Gateway address & broadcast mask
- GSM / HSPA / LTE:
  - USIM pincode
  - APN
  - Login
  - Password
- WLAN :
  - Essid
  - Password

5.3.4.2 Configure credentials

Several security credentials have to be updated when installing the device. KERLINK recommends to:

- Change root password
- Change local WEB interface password
- Change local WEB interface certificate
- Change Backhaul interface certificate

6. List of the accessories

Basic configuration:

KERLINK Reference	Designation
KLK-P0073	Wirnet iBTS enclosure, including: - 1 X Wall mount kit - 1 X U bolt mounting kit - 1 X M25 cable gland - 2 X N-SMB adapters - 2 x RF coaxial SMB/SMA cables - 9 X M16 blind stop - 1 X CPU Module
KLK-P0074	Wirnet iBTS Compact enclosure, including: - 1 X Wall mount kit - 1 X U bolt mounting kit - 1 x combo antenna LTE / GNSS - 1 X M25 cable gland - 1 X N-SMB adapters - 1 x RF coaxial SMB/SMA cables - 1 X M16 blind stop - 1 X CPU Module

LoRa modules:

KERLINK Reference	Designation
KLK-P0078 **KLK-I0141**	Single LoRa Module 868 – LoRa LOC, including: - 2 X N-SMB adapter - 2 x RF coaxial SMB/SMB cable
KLK-I0164	Single LoRa Module 915 – LoRa LOC, including: - 2 X N-SMB adapter - 2 x RF coaxial SMB/SMB cable
KLK-P0079 **KLK-I0153**	Quad LoRa Modules 915 – LoRa LOC – 64 channels, including: - 2 X N-SMB adapter - 2 x RF coaxial SMB/SMB cable
KLK-I0166	Single LoRa Module 923 – LoRa LOC, including: - 2 X N-SMB adapter - 2 x RF coaxial SMB/SMB cable
KLK-I0160	Quad LoRa Modules 923 – LoRa LOC – 64 channels, including: - 2 X N-SMB adapter - 2 x RF coaxial SMB/SMB cable

UC module:

KERLINK Reference	Designation
KLK-P0072 **KLK-I0147**	UC Module, including: - 1 X N-SMB adapter - 1 x RF coaxial SMB/SMA cable

WAN modules:

KERLINK Reference	Designation
KLK-P0076 **KLK-I0146**	WAN Module – LTE Europe – with backup battery, including: - 1 X 868MHz notch filter - 1 X LTE Europe / APAC Mini PCI Express module - 1 X N-SMB adapter - 1 x RF coaxial SMB/SMA cable - 1 x backup battery
KLK-P0077 **KLK-I0156**	WAN Module – LTE Americas – with backup battery, including: - 1 X 915MHz notch filter - 1 X LTE Americas Mini PCI Express module - 1 X N-SMB adapter - 1 x RF coaxial SMB/SMA cable - 1 x backup battery
KLK-I0162	WAN Module – LTE APAC – with backup battery, including: - 1 X 915MHz notch filter - 1 X LTE Europe / APAC Mini PCI Express module - 1 X N-SMB adapter - 1 x RF coaxial SMB/SMA cable - 1 x backup battery

LoRa antennas:

KERLINK Reference	Designation
KLK-I0145	Omnidirectional antenna 868MHz 3dBi kit, including: - 1 X Universal antenna bracket - 1 X 1m coaxial cable
KLK-I0167	Omnidirectional antenna 915MHz 3dBi kit, including: - 1 X Universal antenna bracket - 1 X 1m coaxial cable
KLK-I0158	Omnidirectional antenna 915MHz 6dBi kit, including: - 1 X Universal antenna bracket - 1 X 1m coaxial cable
KLK02518	Omnidirectional antenna 915MHz 6dBi from FT-RF with its own antenna bracket

GNSS and WAN antennas:

KERLINK Reference	Designation
KLK-I0149	GNSS antenna kit, including: - 1 X 5m coaxial cable - 1 X Dome antenna bracket
KLK-I0150	LTE antenna kit, including: - 1 X 5m coaxial cable - 1 X Dome antenna bracket

Cavity filters:

KERLINK Reference	Designation
KLK02522	920-925MHz cavity filter, IP66, N connectors
KLK02523	862-867MHz cavity filter, IP66, N connectors

Cables:

KERLINK Reference	Designation
KLK02460	RF coaxial cable N-N 1m

PoE injectors:

KERLINK Reference	Designation
KLK02681	Indoor Midspan PoE injector 30W with E/F type cable (Europe)
KLK02765	Indoor Midspan PoE injector 30W with B type cable (USA)
KLK02744	Indoor Midspan PoE injector 60W with E/F type cable (Europe)
KLK02766	Indoor Midspan PoE injector 60W with B type cable (USA)
KLK02815	Outdoor Midspan PoE injector 30W, IP66
KLK02816	Outdoor Midspan PoE injector 60W, IP66

Surge protections:

KERLINK Reference	Designation
KLK02819	RF coaxial surge protector
KLK02818	PoE surge protector, indoor
KLK02817	PoE surge protector, outdoor

Debug tool:

KERLINK Reference	Designation
KLK-I0036	Wirma2 debug tool
KLK02314	RJ45 cable, 40cm
KLK02440	USB2.0 A type / B type cable, 2m

Mounting kits:

KERLINK Reference	Designation
KLK-I0168	Notched V-shaped pole mounting kit, including: - 1 X notched V shaped plate - 1 X U bolt
KLK02453	Universal antenna bracket
KLK02692	Dome antenna bracket

7. KERLINK support

The Wirnet iBTS gateway must be installed and maintained by authorized and qualified personnel only.
In case of defect or breakdown, make sure the above recommendations detailed in this document are met.
If an issue is not addressed in this document, contact KERLINK at support@kerlink.fr.

END OF DOCUMENT