M2401 User Manual

SX1280 2.4GHz SMD Wireless Module

Contents

1.1 Brief introduction..... 3
1.2 Features.....3
1.3 Application..... 3
2.Specification and parameter..... 4
2.1 Limit parameter..... 4
2.2 Operating parameter..... 4
3.Size and pin definition..... 5
4. Basic operation..... 6
4.1 Hardware design..... 6
4.2 Software editing.....7
5.Basic application..... 7
5.1 Basic circuit diagram..... 7
6.FAQ..... 8
6.1 Communication range is too short.....8
6.2 Module is easy to damage..... 8
6.3 BER(Bit Error Rate) is high..... 8
7.Production guidance..... 8
7.1 Reflow soldering temperature..... 8
7.2 Reflow soldering curve.....9
8.E28 Series..... 9
9.Antenna guidance..... 10
9.1 Antenna recommendation..... 10
9.2 Antenna selection..... 10
Revision history.....11
About us..... 10

1.Overview

1.1 Brief introduction

M2401 is a 2.4GHz bluetooth module designed by long distance and ultra-low power consumption. M2401 is small-sized SMD module(pin spacing 1.27mm),built-in PCB antenna and IPEX antenna. High precision 52MHz crystal is used.

Based on the original imported RF chip SX1278 from Semtech, The outstanding ultra-low power consumption and the DC-DC and Time-of-Flight on chip make the chip much more capable for smart home, security system, tracking and locating, wireless distance measuring, wearable electronics, smart bracelet and health management & etc. SX1280 supports RSSI,users need to conduct a secondary development based on their own demands;SX1280 also integrates time of flight for ranging functions. Since the module is a pure RF transceiver module, you need to use the MCU driver or a dedicated SPI debug tool.

1.2 Features

- Support the global license-free ISM 2.4GHz band；
- Large capacity FIFO, supports 256Byte data buffer；
- Support 1.8V~3.6V power supply, power supply over 3.3V can guarantee the best performance；
- Industrial grade standard design, support -40 ~ 85 °C for working over a long time；
- IPEX and PCB antenna optional, good for secondary development and integration；
- Excellent anti-blocking properties；
- Ranging, with Time-of-flight function.

1.3 Application

- Home security alarm and remote keyless entry；
- Smart home and industrial sensors；
- Wireless alarm security system；
- Building automation solutions；
- Wireless industrial-grade remote control；
- Health care products；
- Advanced Meter Reading Architecture(AMI)；
- Automotive industry applications.

2.Specification and parameter

2.1 Limit parameter

Main parameter	Performance		Remark
	Min.	Max.	
Power supply（V）	1.8	3.6	Voltage over 3.6V will cause permanent damage to module
Blocking power（dBm）	-	10	Chances of burn is slim when modules are used in short distance
Operating temperature（℃）	-40	85	-

2.2 Operating parameter

Main parameter		Performance			Remark
		Min.	Typ.	Max.	
Operating voltage（V）		1.8	3.3	3.6	≥3.3 V ensures output power
Communication level（V）		-	3.3	-	For 5V TTL, it may be at risk of burning down
Operating temperature（℃）		-40	-	85	Industrial design
Operating frequency（MHz）		2401	-	2479	Support ISM band
Power consumption	TX current（mA）	-	140	-	Instant power consumption
	RX current（mA）	-	10	-	-
	Sleep current （μA）	-	2.0	-	Software is shut down

Main parameter	Description	Remark
FIFO	256Byte	Max length transmitted each time
Crystal frequency	52MHz	-
Package	SMD	-
Connector	1.27mm	IPEX/PCB
Communication interface	SPI	0-10Mbps
Size	26.5* 15*2.8 mm	-
Antenna	IPEX/PCB	50 ohm impedance

3.Size and pin definition

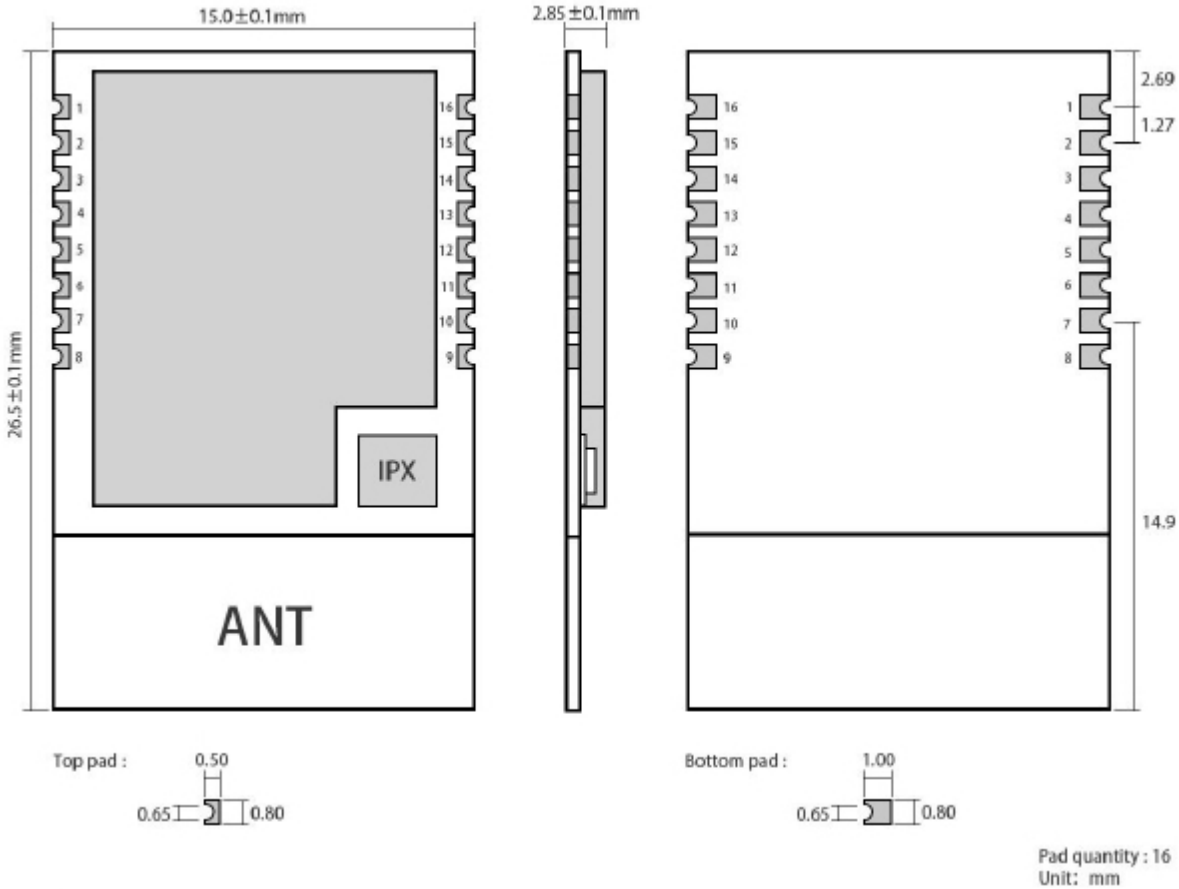

Pin No	Pin item	Pin direction	Pin application
1	VCC	-	Power supply: 1.8~3.6V (Ceramic filter capacitor is advised to add)
2	GND	-	Ground, connecting to power supply reference ground
3	MISO_TX	Output	SPI data output pin,can be used as UART transmitting pin
4	MOSI_RX	Input	SPI data input pin,can be used as UART receiving pin
5	SCK_RTSN	Input	SPI clock input pin,can be used as UART request transmitting pin
6	NSS_CTS	Input	Module chip selection pin, used to start a SPI communication; and can be used as UART clearing transmitting pin(refer to SX1280 Datasheet)
7	GND	-	Ground, connecting to power supply reference ground
8	RX_EN	Input	LNA controlling pin. Valid under high level
9	TX_EN	Input	PA controlling pin. Valid under high level
10	GND	-	Ground, connecting to power supply reference ground
11	NRESET	Input	Chip reset initiation input pin, valid under low level, built-in 50k pull-up resistor
12	BUSY	Output	Status indication (refer to SX1280 Datasheet)
13	DIO1	Input / Output	Configurable IO port（Please find more on SX1280 datasheet）
14	DIO2	Input / Output	Configurable IO port（Please find more on SX1280 datasheet）
15	DIO3	Input / Output	Configurable IO port（Please find more on SX1280 datasheet）

16	GND	-	Ground, connecting to power supply reference ground

4. Basic operation

4.1 Hardware design

- It is recommended to use a DC stabilized power supply. The power supply ripple factor is as small as possible, and the module needs to be reliably grounded. ;
- Please pay attention to the correct connection of the positive and negative poles of the power supply. Reverse connection may cause permanent damage to the module ;
- Please check the power supply to ensure it is within the recommended voltage otherwise when it exceeds the maximum value the module will be permanently damaged ;
- Please check the stability of the power supply, the voltage can not be fluctuated frequently ;
- When designing the power supply circuit for the module, it is often recommended to reserve more than 30% of the margin, so the whole machine is beneficial for long-term stable operation. ;
- The module should be as far away as possible from the power supply, transformers, high-frequency wiring and other parts with large electromagnetic interference. ;
- High-frequency digital routing, high-frequency analog routing, and power routing must be avoided under the module. If it is necessary to pass through the module, assume that the module is soldered to the Top Layer, and the copper is spread on the Top Layer of the module contact part(well grounded), it must be close to the digital part of the module and routed in the Bottom Layer ;
- Assuming the module is soldered or placed over the Top Layer, it is wrong to randomly route over the Bottom Layer or other layers, which will affect the module's spurs and receiving sensitivity to varying degrees ;
- It is assumed that there are devices with large electromagnetic interference around the module that will greatly affect the performance. It is recommended to keep them away from the module according to the strength of the interference. If necessary, appropriate isolation and shielding can be done ;
- Assume that there are traces with large electromagnetic interference (high-frequency digital, high-frequency analog, power traces) around the module that will greatly affect the performance of the module. It is recommended to stay away from the module according to the strength of the interference.If necessary, appropriate isolation and shielding can be done.
- If the communication line uses a 5V level, a 1k-5.1k resistor must be connected in series (not recommended, there is still a risk of damage) ;
- Try to stay away from some physical layers such as TTL protocol at 2.4GHz , for example: USB3.0 ;
- The mounting structure of antenna has a great influence on the performance of the module. It is necessary to ensure that the antenna is exposed, preferably vertically upward. When the module is mounted inside the case, use a good antenna extension cable to extend the antenna to the outside ;
- The antenna must not be installed inside the metal case, which will cause the transmission distance to be greatly weakened.

4.2 Software editing

- This module is based on SX1280,same drive way as SX1280,user can refer to SX1280 datasheet.
- DIO is general I/O port，see more in SX1280 datasheet.
- GDO 2 is generally configurated as IRQ function, IRQ pin can also be disconnected. The SPI query mode can be used to obtain the interrupt status. However, it is recommended to use the external interrupt of the MCU.
- After SX1280 restores IDLE mode or configures sleep mode, it is recommended that the power configuration table be reinitialized.

5.Basic application

5.1 Basic circuit diagram

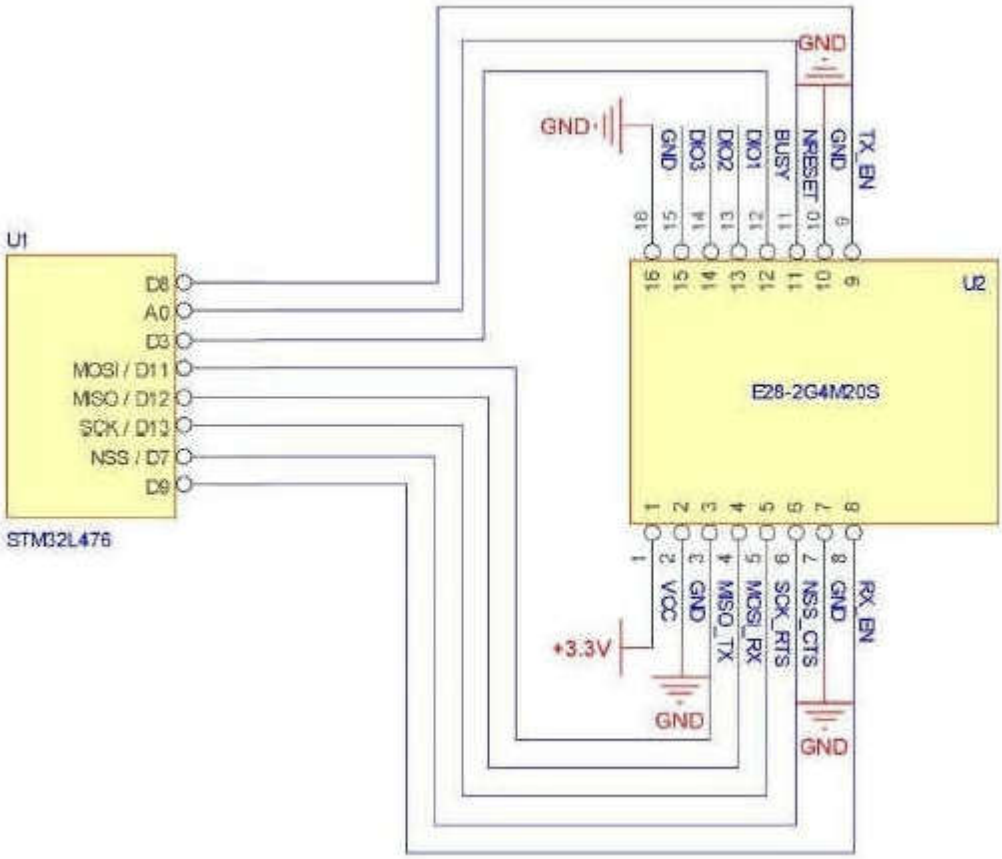

6.FAQ

6.1 Communication range is too short

- The communication distance will be affected when obstacle exists.
- Data lose rate will be affected by temperature, humidity and co-channel interference.
- The ground will absorb and reflect wireless radio wave, so the performance will be poor when testing near ground.
- Sea water has great ability in absorbing wireless radio wave, so performance will be poor when testing near the sea.
- The signal will be affected when the antenna is near metal object or put in a metal case.
- Power register was set incorrectly, air data rate is set as too high (the higher the air data rate, the shorter the distance).
- The power supply low voltage under room temperature is lower than 2.5V, the lower the voltage, the lower the transmitting power.
- Due to antenna quality or poor matching between antenna and module.

6.2 Module is easy to damage

- Please check the power supply source, ensure it is 2.0V~3.6V, voltage higher than 3.6V will damage the module.
- Please check the stability of power source, the voltage cannot fluctuate too much.
- Please make sure antistatic measure are taken when installing and using, high frequency devices have electrostatic susceptibility.
- Please ensure the humidity is within limited range, some parts are sensitive to humidity.
- Please avoid using modules under too high or too low temperature.

6.3 BER(Bit Error Rate) is high

- There are co-channel signal interference nearby, please be away from interference sources or modify frequency and channel to avoid interference;
- Poor power supply may cause messy code. Make sure that the power supply is reliable.
- The extension line and feeder quality are poor or too long, so the bit error rate is high;

7.Production guidance

7.1 Reflow soldering temperature

Profile Feature	Curve characteristics	Sn-Pb Assembly	Pb-Free Assembly
Solder Paste	Solder paste	Sn63/Pb37	Sn96.5/Ag3/Cu0.5
Preheat Temperature min （Tsmin）	Min preheating temp.	100℃	150℃
Preheat temperature max (Tsmax)	Mx preheating temp.	150℃	200℃
Preheat Time (Tsmin to Tsmax)(ts)	Preheating time	60-120 sec	60-120 sec

Average ramp-up rate(Tsmax to Tp)	Average ramp-up rate	3℃/second max	3℃/second max
Liquidous Temperature (TL)	Liquid phase temp.	183℃	217℃
Time（tL）Maintained Above（TL）	Time below liquid phase line	60-90 sec	30-90 sec
Peak temperature（Tp）	Peak temp.	220-235℃	230-250℃
Aveage ramp-down rate（Tp to Tsmax）	Aveage ramp-down rate	6℃/second max	6℃/second max
Time 25℃ to peak temperature	Time to peak temperature for 25℃	max 6 minutes	max 8 minutes

7.2 Reflow soldering curve

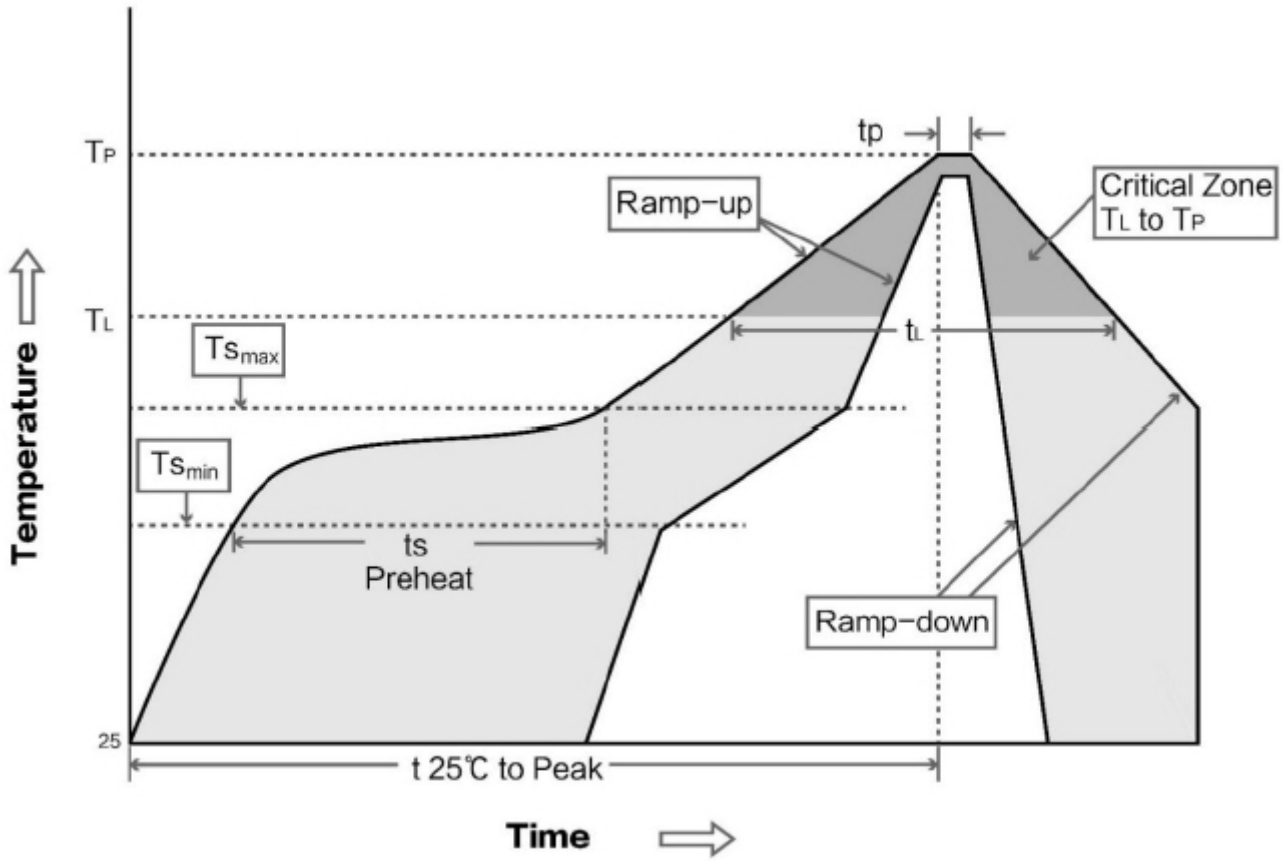

FCC WARNING
FCC Caution: Any changes or modifications not expressly approved by the party responsible for compliance could void the user's authority to operate this equipment.
This device complies with Part 15 of the FCC Rules. Operation is subject to the following two conditions:
(1) This device may not cause harmful interference, and (2) this device must accept any interference received, including interference that may cause undesired operation.
This device and its antenna(s) must not be co-located or operating in conjunction
with any other antenna or transmitter.

15.105 Information to the user.
(b) For a Class B digital device or peripheral, the instructions furnished the
user shall include the following or similar statement, placed in a prominent
location in the text of the manual:
Note: This equipment has been tested and found to comply with the limits for a Class B digital device, pursuant to part 15 of the FCC Rules.
These limits are designed to provide reasonable protection against harmful interference in a residential installation. This equipment generates, uses and can radiate radio frequency energy and, if not installed and used in accordance with the instructions, may cause harmful interference to radio communications. However, there is no guarantee that interference will not occur in a particular installation. If this equipment does cause harmful interference to radio or television reception, which can be determined by turning the equipment off and on, the user is encouraged to try to correct the interference by one or more of the following measures:
—Reorient or relocate the receiving antenna.
—Increase the separation between the equipment and receiver.
—Connect the equipment into an outlet on a circuit different from that to which
the receiver is connected.
—Consult the dealer or an experienced radio/TV technician for help.

The device has been evaluated to meet general RF exposure requirement. The device can be used in portable exposure condition without restriction.

Radiation Exposure Statement:
This equipment complies with FCC radiation exposure limits set forth for an
uncontrolled environment.
This transmitter must not be co-located or operating in conjunction with any other
antenna or transmitter.
The availability of some specific channels and/or operational frequency bands
are country dependent and are firmware programmed at the factory to match
the intended destination.
The firmware setting is not accessible by the end user.
The final end product must be labelled in a visible area with the following:
“Contains Transmitter Module 2AFZ6-50105”

Requirement per KDB996369 D03
2.2 List of applicable FCC rules
List the FCC rules that are applicable to the modular transmitter. These are the rules that specifically establish the bands of operation, the power, spurious emissions, and operating fundamental frequencies. DO NOT list compliance to unintentional-radiator rules (Part 15 Subpart B) since that is not a condition of a module grant that is extended to a host manufacturer. See also Section 2.10 below concerning the need to notify host manufacturers that further testing is required.3
Explanation: This module meets the requirements of FCC part 15C(15.247).it specifically establish the 6dB Bandwidth,, Peak Output Power, Radiated Spurious Emission, Power Spectral Density, Restricted Band of Operation and Band Edge (Out of Band Emissions) Measurement

2.3 Summarize the specific operational use conditions
Describe use conditions that are applicable to the modular transmitter, including for example any limits on antennas, etc. For example, if point-to-point antennas are used that require reduction in power or compensation for cable loss, then this information must be in the instructions. If the use condition limitations extend to professional users, then instructions must state that this information also extends to the host manufacturer’s instruction manual. In addition, certain information may also be needed, such as peak gain per frequency band and minimum gain, specifically for master devices in 5 GHz DFS bands.
Explanation: The EUT has PCB antenna and Snap antenna, Yes, this module has a permanently attached antenna and unique antenna connector , PCB antenna gain is 3.77dBi, Snap antenna gain is 1.51dBi.

2.4 Limited module procedures

If a modular transmitter is approved as a “limited module,” then the module manufacturer isresponsible for approving the host environment that the limited module is used with. The manufacturer of a limited module must describe, both in the filing and in the installation instructions, the alternative means that the limited module manufacturer uses to verify that the host meets the necessary requirements to satisfy the module limiting conditions.

A limited module manufacturer has the flexibility to define its alternative method to address the conditions that limit the initial approval, such as: shielding, minimum signaling amplitude, buffered modulation/data inputs, or power supply regulation. The alternative method could include that the limited module manufacturer reviews detailed test data or host designs prior to giving the host manufacturer approval.

This limited module procedure is also applicable for RF exposure evaluation when it is necessary to demonstrate compliance in a specific host. The module manufacturer must state how control of the product into which the modular transmitter will be installed will be maintained such that full compliance of the product is always ensured. For additional hosts other than the specific host originally granted with a limited module, a Class II permissive change is required on the module grant to register the additional host as a specific host also approved with the module.

Explanation: The module is a single module.

2.5 Trace antenna designs

For a modular transmitter with trace antenna designs, see the guidance in Question 11 of KDB Publication 996369 D02 FAQ – Modules for Micro-Strip Antennas and traces. The integration information shall include for the TCB review the integration instructions for the following aspects: layout of trace design, parts list (BOM), antenna, connectors, and isolation requirements.

a) Information that includes permitted variances (e.g., trace boundary limits, thickness, length, width, shape(s), dielectric constant, and impedance as applicable for each type of antenna);

b) Each design shall be considered a different type (e.g., antenna length in multiple(s) of frequency, the wavelength, and antenna shape (traces in phase) can affect antenna gain and must be considered);

c) The parameters shall be provided in a manner permitting host manufacturers to design the printed circuit (PC) board layout;

d) Appropriate parts by manufacturer and specifications;

e) Test procedures for design verification; and

f) Production test procedures for ensuring compliance.

The module grantee shall provide a notice that any deviation(s) from the defined parameters of the antenna trace, as described by the instructions, require that the host product manufacturer must notify the module grantee that they wish to change the antenna trace design. In this case, a Class II permissive change application is required to be filed by the grantee, or the host manufacturer can take responsibility through the change in FCC ID (new application) procedure followed by a Class II permissive change application.

Explanation: Yes, The module with trace antenna designs and Snap antenna, and This manual has been shown the layout of trace design, antenna, connectors, and isolation requirements.

2.6 RF exposure considerations

It is essential for module grantees to clearly and explicitly state the RF exposure conditions that permit a host product manufacturer to use the module. Two types of instructions are required for RF exposure information: (1) to the host product manufacturer, to define the application conditions (mobile, portable – xx cm from a person’s body); and (2) additional text needed for the host product manufacturer to provide to end users in their end-product manuals. If RF exposure statements and use conditions are not provided, then the host product manufacturer is required to take responsibility of the module through a change in FCC ID (new application).

Explanation: This module complies with FCC RF radiation exposure limits set forth for an uncontrolled environment." This module is designed to comply with the FCC statement, FCC ID is: 2AFZ6-50105.

2.7 Antennas

A list of antennas included in the application for certification must be provided in the instructions. For modular transmitters approved as limited modules, all applicable professional installer instructions must be included as part of the information to the host product manufacturer. The antenna list shall also identify the antenna types (monopole, PIFA, dipole, etc. (note that for example an “omni-directional antenna” is not considered to be a specific “antenna type”)).

For situations where the host product manufacturer is responsible for an external connector, for example with an RF pin and antenna trace design, the integration instructions shall inform the installer that unique antenna connector must be used on the Part 15 authorized transmitters used in the host product. The module manufacturers shall provide a list of acceptable unique connectors.

Explanation: The EUT has PCB antenna and Snap antenna, Yes, this module has a permanently attached antenna and unique antenna connector , PCB antenna gain is 3.77dBi, Snap antenna gain is 1.51dBi.

2.8 Label and compliance information

Grantees are responsible for the continued compliance of their modules to the FCC rules. This includes advising host product manufacturers that they need to provide a physical or e-label stating “Contains FCC ID” with their finished product. See Guidelines for Labeling and User Information for RF Devices – KDB Publication 784748.

Explanation:The host system using this module, should have label in a visible area indicated the following texts: "Contains FCC ID: 2AFZ6-50105”

2.9 Information on test modes and additional testing requirements5

Additional guidance for testing host products is given in KDB Publication 996369 D04 Module Integration Guide. Test modes should take into consideration different operational conditions for a stand-alone modular transmitter in a host, as well as for multiple simultaneously transmitting modules or other transmitters in a host product.

The grantee should provide information on how to configure test modes for host product evaluation for different operational conditions for a stand-alone modular transmitter in a host, versus with multiple, simultaneously transmitting modules or other transmitters in a host.

Grantees can increase the utility of their modular transmitters by providing special means, modes, or instructions that simulates or characterizes a connection by enabling a transmitter. This can greatly simplify a host manufacturer's determination that a module as installed in a host complies with FCC requirements.

Explanation: Company can increase the utility of our modular transmitters by providing instructions that simulates or characterizes a connection by enabling a transmitter.

2.10 Additional testing, Part 15 Subpart B disclaimer

The grantee should include a statement that the modular transmitter is only FCC authorized for the specific rule parts (i.e., FCC transmitter rules) listed on the grant, and that the host product manufacturer is responsible for compliance to any other FCC rules that apply to the host not covered by the modular transmitter grant of certification. If the grantee markets their product as being Part 15 Subpart B compliant (when it also contains unintentional-radiator digital circuity), then the grantee shall provide a notice stating that the final host product still requires Part 15 Subpart B compliance testing with the modular transmitter installed.

Explanation: The module without unintentional-radiator digital circuity, so the module does not require an evaluation by FCC Part 15 Subpart B. The host shoule be evaluated by the FCC Subpart B.