Product Specification

Product:	**Bluetooth 4.1 Module**
Module Number:	**AVI1010-B**
Doc Version:	**V1.0**
Customer:	
Date:	**04.08, 2018**

ITON Technology Corp.

Office Add.: Room 1302, Block A, Building 4, Tianan Cyber Park, Huangge Road, Longgang District, Shenzhen, Guangdong, China

Tel: 0755-82079390/82079392 Fax: 86-755-82079390-8007

Content

Section 1: Overview 3

1.1 Detailed Specifications 3

1.2 Applications 3

1.3 Features 4

1.4 Functional Block Diagram 5

1.5 Physical Description 6

Section 2: Supporting Documentations 7

2.1 Reference Schematic 7

2.2 Layout Considerations 7

2.3 Recommended Operating Conditions 7

2.4 RF Specification 8

Section 3: Application Diagram 8

Section 4: Mechanical Specification 9

Section 5: Information for Manufacture 10

Section 6: Packaging Specifications 11

Section 7: FCC Statement 13

Section 8: Canada Statement 15

Section 1: Overview

The AVI1010-B module is an RF module built on the CSR1010 chipset, which provides a single-chip solution to controlling all types of lighting and other devices, whether line-connected or battery-powered.Controlling host and radio interfaces, the on-chip microcontroller runs both the Bluetooth Stack and the Bluetooth Mesh Application Stack. The on-chip RF transceiver includes the complete receiver and transmitter functions and support external antenna.

1.1 Detailed Specifications

Item	Characteristic	Detailed Description
1	RF Technology	Frequency Hopping Spread Spectrum
2	RF Frequency	2402 to 2480 MHz
3	Modulation Type	GFSK
4	Operating Frequency	2402 ~ 2480 MHz ISM band
5	Channel Numbers	40 (f = 2402 + k*2 MHz, k=0,1, 2… 39)
6	Data Rate	1 Mbps (Typically)
7	Transmitter Output Power	11dBm typ(Direct measurement)
8	Receiver Sensitivity	-90 dBm Typical
9	Antenna Type	internal antenna(antenna with a IPEX connector，or antenna can be welded to the module) and external antenna
10	Operating Voltage(VBAT)	1.8V～3.6VDC
11	Current Consumption	18 mA@3.3V active mode 35 mA@1.8V active Mode Max. <5uA@3V Sleep mode (estimated)
12	Size	18mm×12mm×2.5.mm(LxWxH)
13	Operating Temp	-30° C to +85° C

1.2 Applications

- Lighting control
- Alarm sensors
- Window and door locks
- Temperature and smoke monitoring.
- Remote controls
- Other of Smart home

1.3 Features

The AVI1010-B module offers the following features:

- Bluetooth® v4.1 specification compliant
- Bluetooth Smart
- Security: 128bit UUID and 128bit AES encryption
- Support for 4 PWM channels of 100Hz to 4 kHz
- Each group can have 65,536 units and users can create up to 65,536 groups
- Can be added to the network by scanning QR code
- Built in UART, I2C, SPI, ADC, PWM dimming interfaces
- Internal EEPROM memory provides storage for the Bluetooth software parameter and application parameter
- PCB Size: 18mm*12mm*0.8mm
- Electrical:

o DC Supply: 1.8V ~3.6V

o Low current consumption: 24 mA @3V (Peak Current)

- ROHS compliant
- BQB certification

1.4 Functional Block Diagram

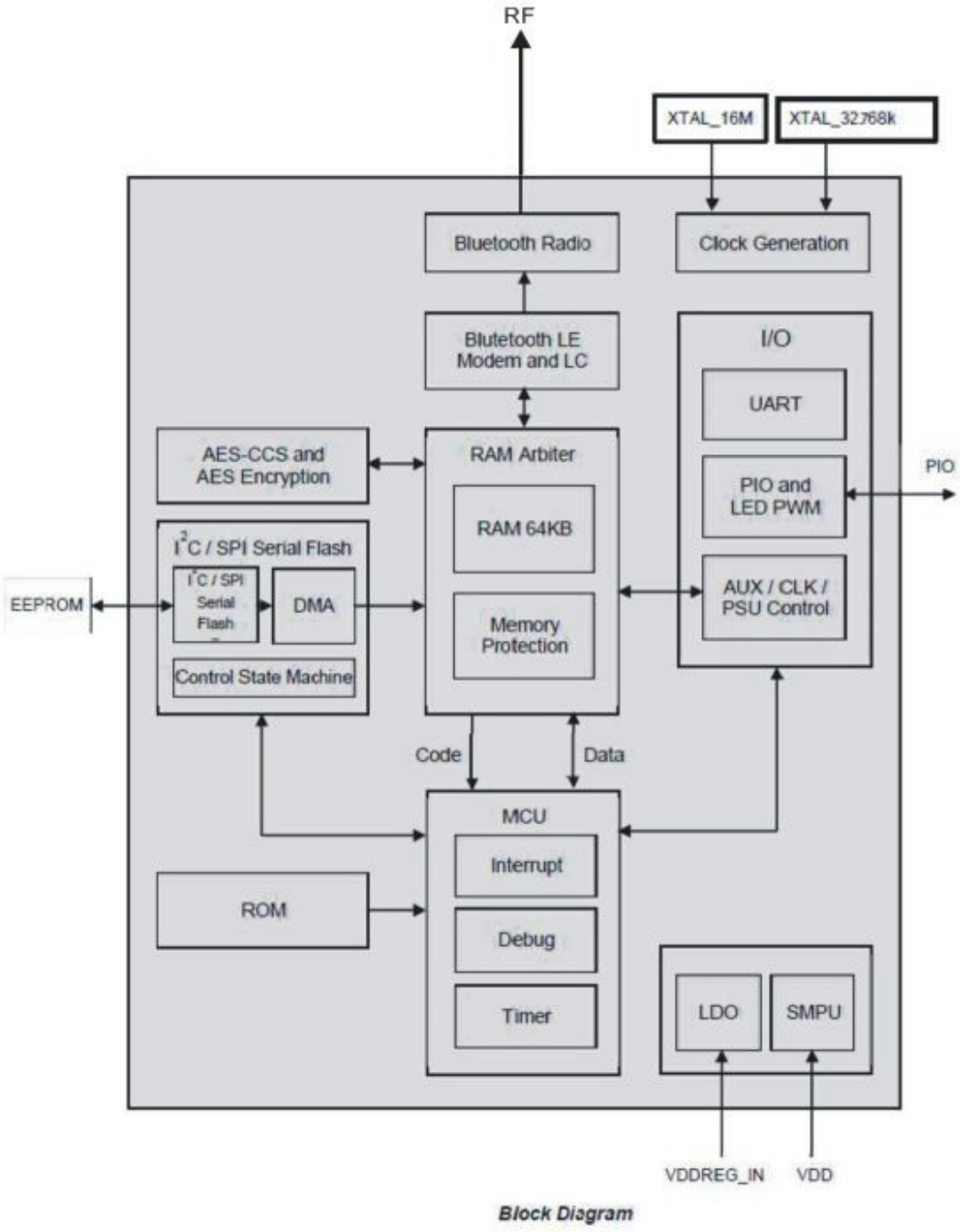

Figure 1: Functional Block Diagram

1.5 Physical Description

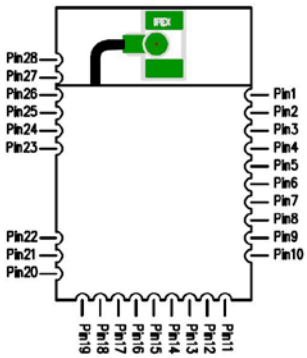

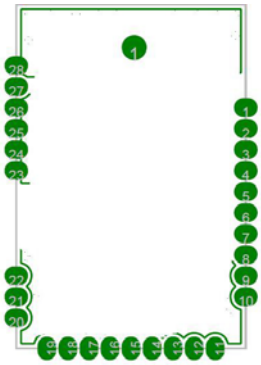

Pins	Name	Function	Description
1	WAKE	I	If not used, tie to GND
2	XTAL_32K_IN	Analog in	32.768KHz installed
3	XTAL_32K_OUT	Analog in	32.768KHz installed
4	I2C_SCL	I/O	SPI serial flash installed, or I2C clock Input/output.
5	VBATT	Power	Power input
6	I2C_SDA	I/O	SPI serial flash installed, or I2C data Input/output.
7	SPI_PION	I	SPI serial flash installed, or I2C clock Input/output.
8	PIO[11]	I/O	Programmable I/O
9	PIO[10]	I/O	Programmable I/O
10	PIO[9]	I/O	Programmable I/O
11	SPI_MISO/PIO[8]	I/O	SPI data output or Programmable I/O
12	SPI_MOSI/PIO[7]	I/O	SPI data input or Programmable I/O
13	SPI_CSB/PIO[6]	I/O	SPI select or Programmable I/O
14	SPI_CLK/PIO[5]	I/O	SPI clock or Programmable I/O
15	PIO[4]	I/O	Programmable I/O
16	VDD_PADS	Power	Positive supply for all digital I/O ports
17	PIO[3]	I/O	Programmable I/O
18	UART0_RX/PIO[2]	I/O	UART RX or Programmable I/O
19	UART0_TX/PIO[1]	I/O	UART TX or Programmable I/O
20	AIO[0]	I/O	Analogue Programmable I/O
21	AIO[1]	I/O	Analogue Programmable I/O
22	AIO[2]	I/O	Analogue Programmable I/O
23	GND	Ground	Ground
24	GND	Ground	Ground
25	GND	Ground	Ground
26	GND	Ground	Ground
27	RF	Antenna	External Antenna
28	GND	Ground	Ground

Section 2: Supporting Documentations

2.1 Reference Schematic

The most recent schematic , bill of material ,and layout file are available from the I TON Technology Corp. Contact your ITON representative for more details.

2.2 Layout Considerations

The AVI1010 module is located where the antenna is away from the power supply and any digital signal traces.The antenna keep-out area which is 5mm around the parameter of the module region. PCB material and signal traces should not be placed within the antenna keep-out area to assure optimum antenna performance.

2.3 Recommended Operating Conditions

Operating Condition	*Symbol*	*Value*	*Unit*
Dc supply voltage	VBAT	1.8(Min)--3.6(Max)	V
I/O supply voltage (VDD_PADS)	VI/O	1.2 to 3.6	V
Operating temperature range	Topr	-30 to +85	℃
Storage temperature range	Tstg	-40 to +85	℃

Figure 2:Recommended Operating Conditions

2.4 RF Specification

AVI1010-B Module contains an integrated balun which provides a single-ended RF TX / RX IPEX connector. The transmitter has been optimised to deliver power in to a 50Ω load.

And then,the AVI1010VIA -B RF Spec base on CSR1010 DataSheet。

Bluetooth Transmitter

- 9dBm RF transmit power with level control from integrated 6-bit DAC over a dynamic range >25dB
- No external power amplifier or TX/RX switch required

Bluetooth Receiver

- -90dBm sensitivity
- Integrated channel filters
- Digital demodulator for improved sensitivity and cochannel rejection
- Fast AGC for enhanced dynamic range

Section 3: Application Diagram

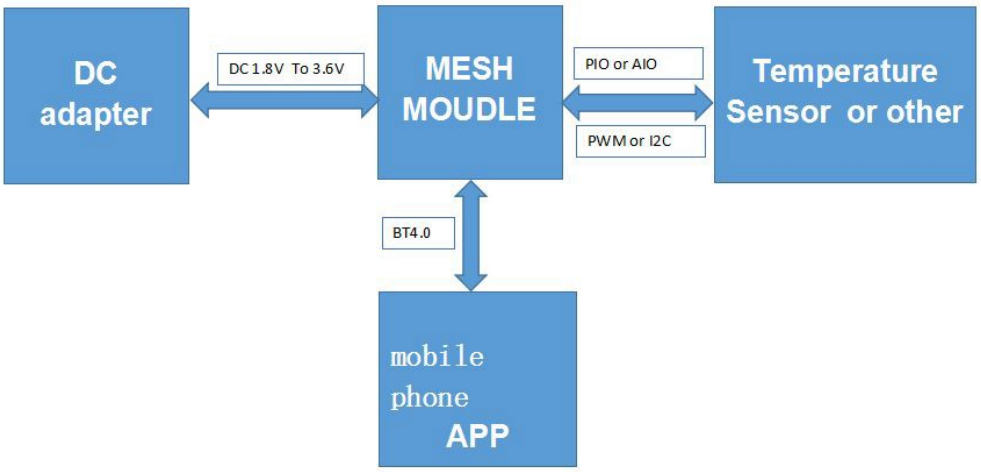

Section 4: Mechanical Specification

Relative coordinate as below and Unit:mm

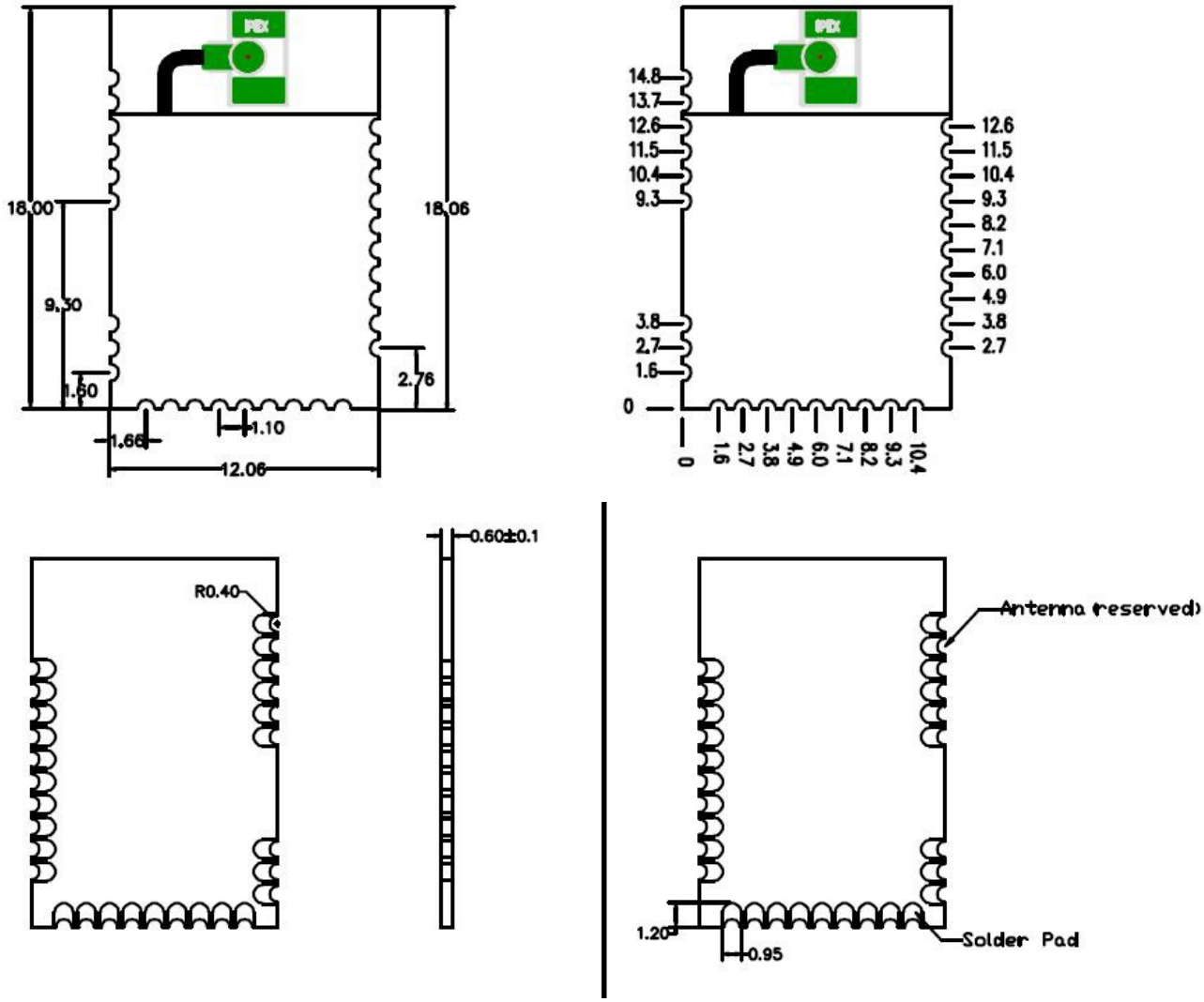

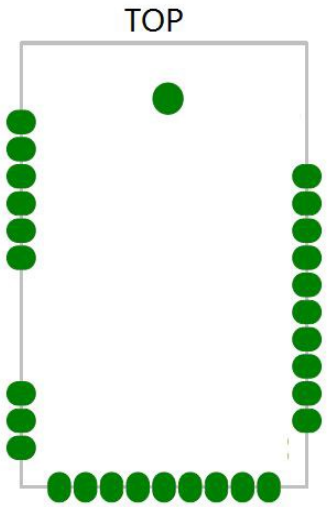

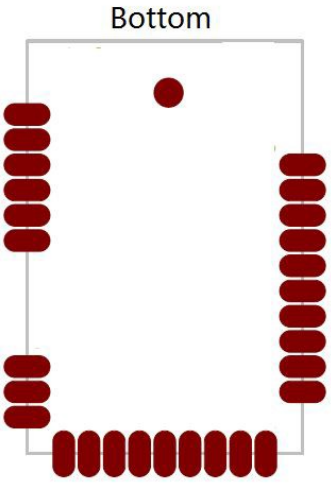

Section 5: Information for Manufacture

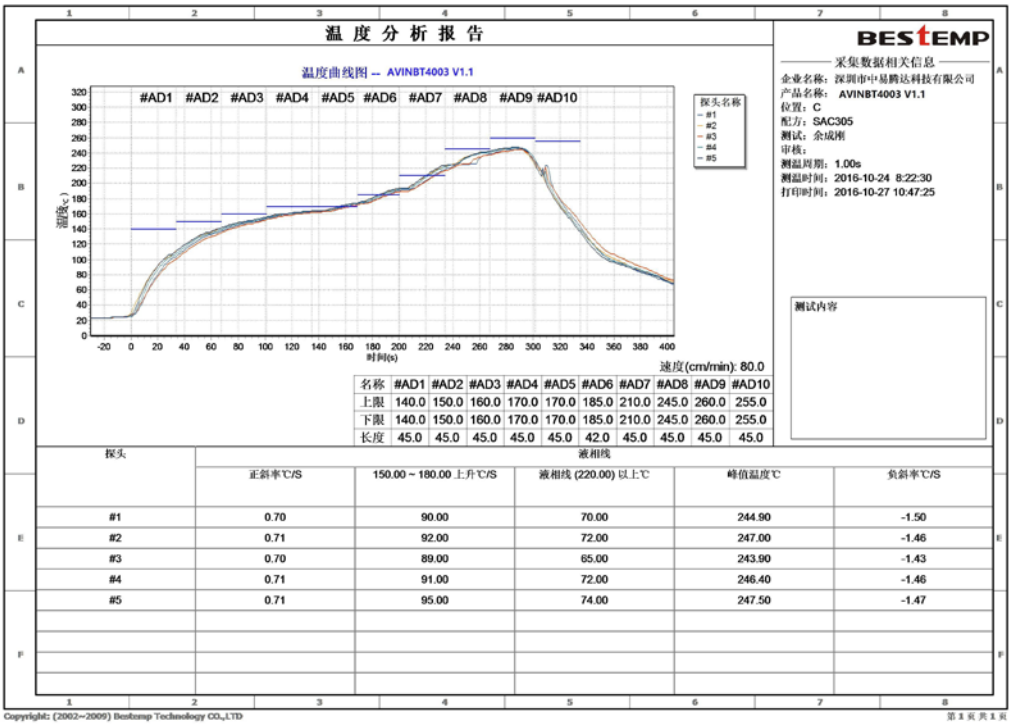

温 度 分 析 报 告

BESTEMP

温度曲线图 -- AVINBT4003 V1.1

采集数据相关信息

企业名称：深圳市中易腾达科技有限公司
产品名称： AVINBT4003 V1.1
位置：C
配方：SAC305
测试：余成刚
审核：
测温周期：1.00s
测温时间：2016-10-24 8:22:30
打印时间：2016-10-27 10:47:25

测试内容

速度(cm/min): 80.0

名称	#AD1	#AD2	#AD3	#AD4	#AD5	#AD6	#AD7	#AD8	#AD9	#AD10
上限	140.0	150.0	160.0	170.0	170.0	185.0	210.0	245.0	260.0	255.0
下限	140.0	150.0	160.0	170.0	170.0	185.0	210.0	245.0	260.0	255.0
长度	45.0	45.0	45.0	45.0	45.0	42.0	45.0	45.0	45.0	45.0

探头	液相线				
	正斜率℃/S	150.00 ~ 180.00 上升℃/S	液相线 (220.00) 以上℃	峰值温度℃	负斜率℃/S
#1	0.70	90.00	70.00	244.90	-1.50
#2	0.71	92.00	72.00	247.00	-1.46
#3	0.70	89.00	65.00	243.90	-1.43
#4	0.71	91.00	72.00	246.40	-1.46
#5	0.71	95.00	74.00	247.50	-1.47

Copyright: (2002~2009) Bestemp Technology CO.,LTD

第 1 页 共 1 页

Section 6: Packaging Specifications

For tape and reel packing and labelling see IC Packing and Labelling Specification .

6.1 Tape Orientation

Figure 6.1 shows the AVI1010-B module packing tape orientation.

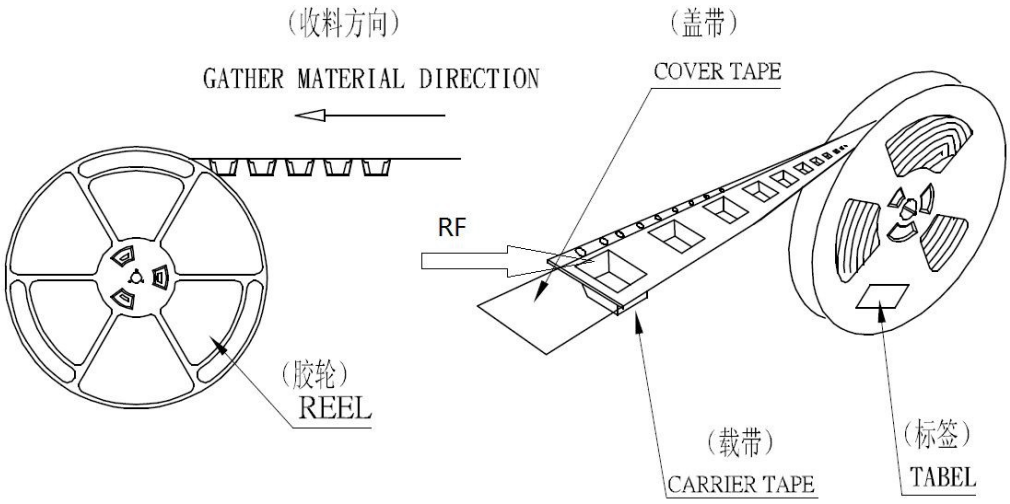

Figure 6.1 :Tape Orientation

6.2 Tape Dimensions

Figure 6.1 shows the dimensions of the tape for the AVI1010-B Module .

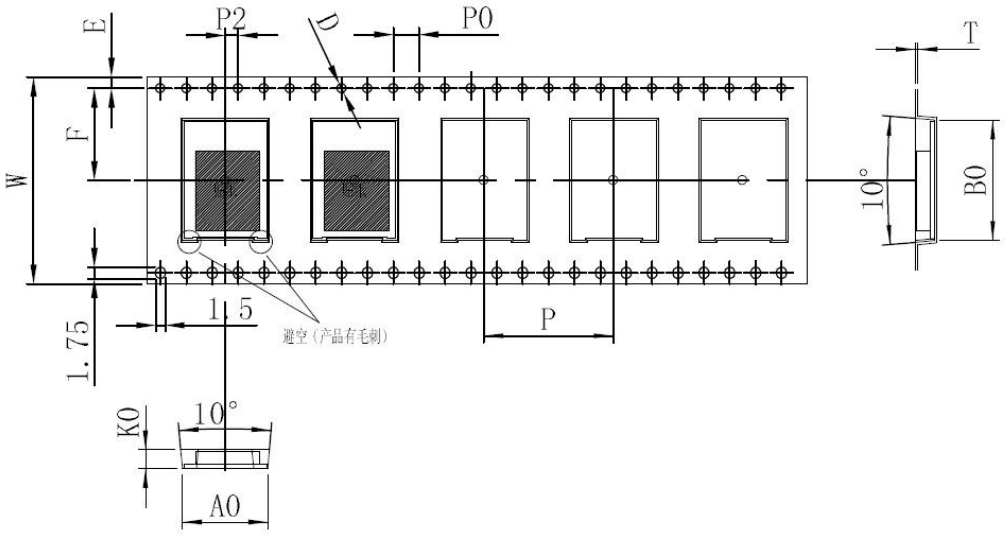

ITEM	W	A0	B0	K0	E	F	P	P0	P2	D	D1	T
DIM	32.0±0.1	13.20±0.1	18.64±0.1	2.93±0.1	1.75±0.1	14.2±0.1	20.00±0.1	4.00±0.1	2.00±0.1	Ø1.5±0.1	Ø1.5±0.1	0.35±0.05

Figure 6.2: Tape Dimensions

6.3 Reel Information

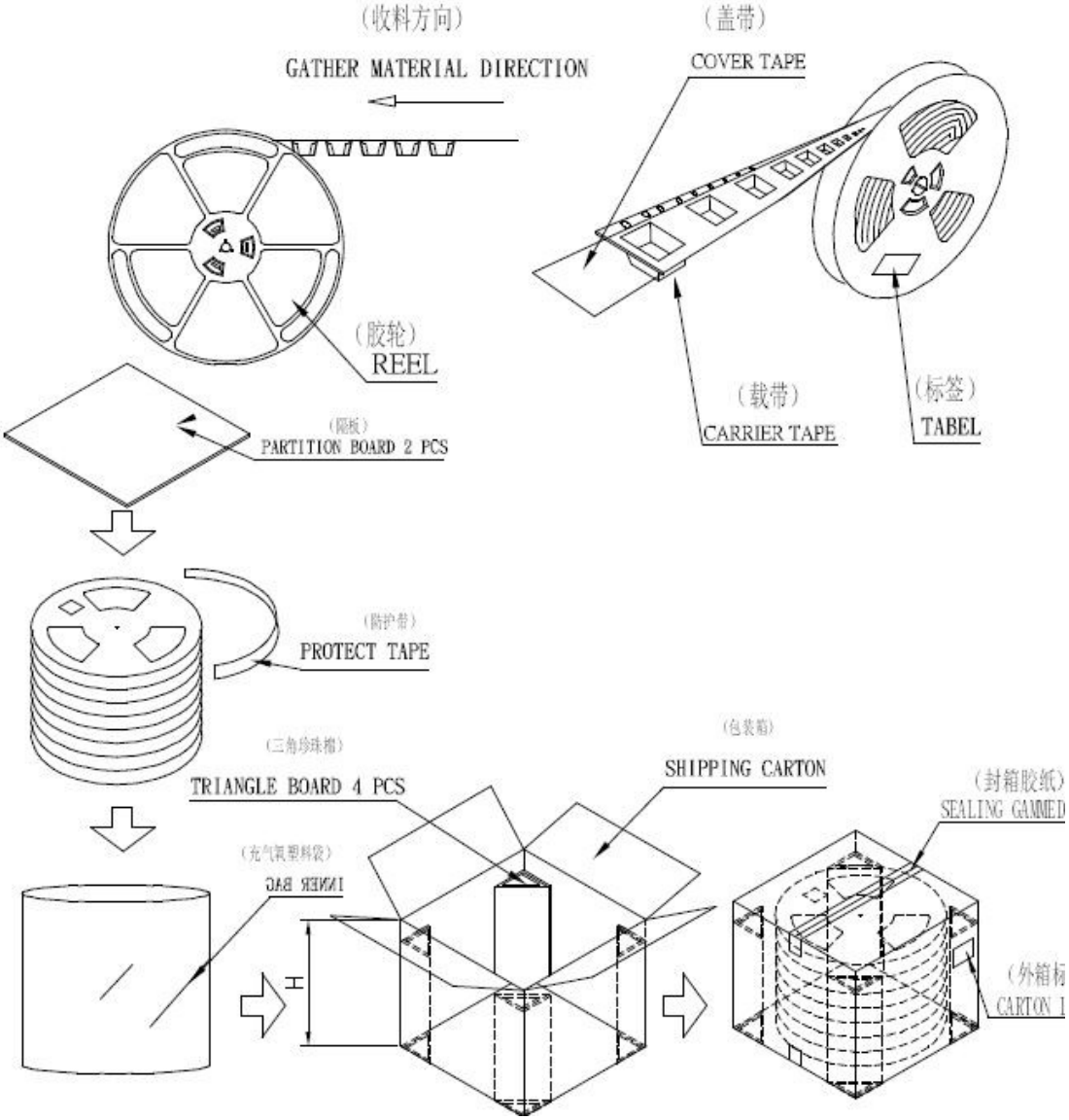

Figure 6.3: Reel Information

Section 7: FCC Statement

This equipment has been tested and found to comply with the limits for a Class B digital device, pursuant to Part 15 of the FCC Rules. These limits are designed to provide reasonable protection against harmful interference in a residential installation. This equipment generates, uses and can radiate radio frequency energy and, if not installed and used in accordance with the instructions, may cause harmful interference to radio communications. However, there is no guarantee that interference will not occur in a particular installation. If this equipment does cause harmful interference to radio or television reception, which can be determined by turning the equipment off and on, the user is encouraged to try to correct the interference by one of the following measures:
- Reorient or relocate the receiving antenna.
- Increase the separation between the equipment and receiver.
- Connect the equipment into an outlet on a circuit different from that to which the receiver is connected.
- Consult the dealer or an experienced radio/TV technician for help.

Caution: Any changes or modifications not expressly approved by the party responsible for compliance could void the user's authority to operate this equipment.
This device complies with Part 15 of the FCC Rules. Operation is subject to the following two conditions: (1) This device may not cause harmful interference, and (2) this device must accept any interference received, including interference that may cause undesired operation.

Radiation Exposure Statement

This equipment complies with FCC radiation exposure limits set forth for an uncontrolled environment. This equipment should be installed and operated with minimum distance 20cm between the radiator and your body.
This transmitter must not be co-located or operating in conjunction with any other antenna or transmitter.
This device is intended only for OEM integrators under the following conditions:
1. The antenna must be installed such that 20 cm is maintained between the antenna and users, and
2. The transmitter module may not be co-located with any other transmitter or antenna,
As long as the three conditions above are met, further transmitter testing will not be required. However, the OEM integrator is still responsible for testing their end-product for any additional compliance requirements required with this module installed.

Important Note:

In the event that these conditions cannot be met (for example certain laptop configurations

or co-location with another transmitter), then the FCC authorization is no longer considered valid and the FCC ID cannot be used on the final product. In these circumstances, the OEM integrator will be responsible for re-evaluating the end product (including the transmitter) and obtaining a separate FCC authorization.

End Product Labeling

This transmitter module is authorized only for use in device where the antenna may be installed such that 20 cm may be maintained between the antenna and users. The final end product must be labeled in a visible area with the following: Contains FCC ID: 2AFZI-AVI1010B.

Manual Information to the End User

The OEM integrator has to be aware not to provide information to the end user regarding how to install or remove this RF module in the user's manual of the end product which integrates this module.
The end user manual shall include all required regulatory information/warning as show in this manual.

Antenna Information

The AVI1010-B have designed to pass certification with antenna listed below; the required antenna impedance is 50 ohms.

Brand	Model Name	Antenna Type	Antenna P/N	Connector	Gain
Avi-on	AVI-IFAC-5A	Dipole	6210ANT	N/A	5.5 dBi
Avi-on	AVI-IFAC-5A-OA	Monopole	6211ANT	N/A	1.6 dBi

Section 8: Canada Statement

This device complies with Industry Canada's license-exempt RSSs. Operation is subject to the following two conditions:
- This device may not cause interference; and
- This device must accept any interference, including interference that may cause undesired operation of the device.

Le présentappareilestconforme aux CNR d'Industrie Canada applicables aux appareils radio exempts de licence. L'exploitationestautorisée aux deux conditions suivantes:
- l'appareil ne doit pas produire de brouillage;
- l'utilisateur de l'appareildoit accepter tout brouillageradioélectriquesubi, mêmesi le brouillageest susceptible d'encompromettre le fonctionnement.

This radio transmitter (IC: 20544-AVI1010B) has been approved by Industry Canada to operate with the antenna types listed below with the maximum permissible gain indicated. Antenna types not included in this list, having a gain greater than the maximum gain indicated for that type, are strictly prohibited for use with this device.
Le présentémetteur radio (IC: 20544-AVI1010B) aétéapprouvé par Industrie Canada pour fonctionner avec les types d'antenneénumérés ci-dessous et ayant un gain admissible maximal. Les types d'antenne non inclusdanscetteliste, etdont le gain estsupérieur au gain maximal indiqué, sontstrictementinterdits pour l'exploitation de l'émetteur.

Brand	Model Name	Antenna Type	Antenna P/N	Connector	Gain
Avi-on	AVI-IFAC-5A	Dipole	6210ANT	N/A	5.5 dBi
Avi-on	AVI-IFAC-5A-OA	Monopole	6211ANT	N/A	1.6 dBi

Radiation Exposure Statement

This equipment complies with Canada radiation exposure limits set forth for an uncontrolled environment. This equipment should be installed and operated with minimum distance 20cm between the radiator & your body.

Déclarationd'exposition aux radiations

Cetéquipementestconforme Canada limitesd'exposition aux radiations dans un environnement non contrôlé. Cetéquipementdoitêtreinstallé et utilisé à distance minimum de 20cm entre le radiateur et votre corps.

This device is intended only for OEM integrators under the following condition:

The transmitter module may not be co-located with any other transmitter or antenna.
As long as the condition above is met, further transmitter test will not be required. However, the OEM integrator is still responsible for testing their end-product for any additional compliance requirements required with this module installed.

Cetappareilestconçuuniquement pour les intégrateurs OEM dans les conditions suivantes:

Le module émetteurpeut ne pas êtrecoïplanté avec unautreémetteurouantenne.
Tant que les 1 condition ci-dessussontremplies, des essaissupplémentaires sur l'émetteur ne seront pas nécessaires. Toutefois, l'intégrateur OEM esttoujoursresponsable des essais sur son produit final pour toutesexigences de conformitésupplémentairesrequis pour ce module installé.

Important Note:

In the event that these conditions cannot be met (for example certain laptop configurations or co-location with another transmitter), then the Canada authorization is no longer considered valid and the IC ID cannot be used on the final product. In these circumstances, the OEM integrator will be responsible for re-evaluating the end product (including the transmitter) and obtaining a separate Canada authorization.

Note Importante:

Dans le casoùces conditions ne peuventêtresatisfaites (par exemple pour certaines configurations d'ordinateur portable ou de certaines co-localisation avec un autreémetteur), l'autorisation du Canada n'est plus considérécommevalide et l'ID IC ne peut pas êtreutilisé sur le produit final. Danscescirconstances, l'intégrateur OEM sera chargé de réévaluer le produit final (y comprisl'émetteur)
etl'obtentiond'uneautorisationdistincte au Canada.

End Product Labeling

The final end product must be labeled in a visible area with the following: Contains IC:20544-AVI1010B.

Plaque signalétique du produit final

Le produit final doitêtreétiquetédans un endroit visible avec l'inscriptionsuivante: Contient des IC: 20544-AVI1010B.

Manual Information to the End User

The OEM integrator has to be aware not to provide information to the end user regarding

how to install or remove this RF module in the user's manual of the end product which integrates this module.
The end user manual shall include all required regulatory information/warning as show in this manual.

Manuel d'information à l'utilisateur final

L'intégrateur OEM doitêtreconscient de ne pas fournir des informations à l'utilisateur final quant à la façnd'installerou de supprimerce module RF dans le manuel de l'utilisateur du produit final qui intègrece module.
Le manuel de l'utilisateur final doitincluretoutes les informationsréglementairesrequises et avertissementscommeindiquédanscemanuel.

FCC Statement

This equipment has been tested and found to comply with the limits for a Class B digital device, pursuant to part 15 of the FCC Rules. These limits are designed to provide reasonable protection against harmful interference in a residential installation. This equipment generates, uses and can radiate radio frequency energy and, if not installed and used in accordance with the instructions, may cause harmful interference to radio communications. However, there is no guarantee that interference will not occur in a particular installation. If this equipment does cause harmful interference to radio or television reception, which can be determined by turning the equipment off and on, the user is encouraged to try to correct the interference by one or more of the following measures:

- Reorient or relocate the receiving antenna.
- Increase the separation between the equipment and receiver.
- Connect the equipment into an outlet on a circuit different from that to which the receiver is connected.
- Consult the dealer or an experienced radio/TV technician for help.

Caution: Any changes or modifications to this device not explicitly approved by manufacturer could void your authority to operate this equipment.
This device complies with part 15 of the FCC Rules. Operation is subject to the following two conditions: (1) This device may not cause harmful interference, and (2) this device must accept any interference received, including interference that may cause undesired operation.

RF Exposure Information
This equipment complies with FCC radiation exposure limits set forth for an uncontrolled environment. This equipment should be installed and operated with minimum distance 20cm between the radiator and your body.
This transmitter must not be co-located or operating in conjunction with any other antenna or transmitter.

This device is intended only for OEM integrators under the following conditions:

1. The antenna must be installed such that 20cm is maintained between the antenna and users, and
2. The transmitter module may not be co-located with any other transmitter or antenna.

Important Note:
In the event that these conditions cannot be met (for example certain laptop configurations or co-location with another transmitter), then the FCC authorization is no longer considered valid and the FCC ID cannot be used on the final product. In these circumstances, the OEM integrator will be responsible for re-evaluating the end product (including the transmitter) and

obtaining a separate FCC authorization.
Any company of the host device which install this modular with limit modular approval should perform the test of radiated emission and spurious emission according to FCC part 15C:15.247 and 15.209 requirement, only if the test result comply with FCC part 15.247 and 15.209 requirement, then the host can be sold legally.

End Product Labeling
If the FCC identification number is not visible when the module is installed inside another device, then the outside of the device into which the module is installed must also display a label referring to the enclosed module. This exterior label can use wording such as the following: Contains Transmitter Module FCC ID: 2AFZI-AVI1010B.

Manual Information to the End User
The OEM integrator has to be aware not to provide information to the end user regarding how to install or remove this RF module in the user's manual of the end product which integrates this module.
The end user manual shall include all required regulatory information/warning as show in this manual.
The modular is not intended to be fielded serviceable as without shielding, host manufacturer must be considered shielding when integrating a module.
When the module is installed inside another device, the user manual of this device must contain below warning statements;
This device complies with Part 15 of the FCC Rules. Operation is subject to the following two conditions:
(1) This device may not cause harmful interference.
(2) This device must accept any interference received, including interference that may cause
Changes or modifications not expressly approved by the party responsible for compliance could void the user's authority to operate the equipment. The devices must be installed and used in strict accordance with the manufacturer's instructions as described in the user documentation that comes with the product.

ISED Statement
- English: This device complies with Industry Canada license exempt RSS standard(s). Operation is subject to the following two conditions: (1) This device may not cause interferenc e, and (2) This device must accept any interference, including interference that may cause un desired operation of the device.
- French:

Le présentappareilestconforme aux CNR d'Industrie Canada applicables aux appareils radio exempts de licence. L'exploitationestautorisée aux deux conditions suivantes: (1) l'appa reil ne doit pas produire de brouillage, et (2) l'utilisateur de l'appareildoit accepter tout brouilla geradioélectriquesubi, mêmesi le brouillageest susceptible d'encompromettre le fonctionnem ent.

Radiation Exposure Statement
This equipment complies with Canada radiation exposure limits set forth for an uncontrolled environment. This equipment should be installed and operated with minimum distance 20cm between the radiator & your body.
Déclaration d'exposition aux radiations
Cet équipement est conforme Canada limites d'exposition aux radiations dans un environnement non contrôlé. Cet équipement doit être installé et utilisé à distance minimum de 20cm entre le radiateur et votre corps.

This device is intended only for OEM integrators under the following condition:
The transmitter module may not be co-located with any other transmitter or antenna.
As long as the condition above is met, further transmitter test will not be required. However, the OEM integrator is still responsible for testing their end-product for any additional compliance requirements required with this module installed.
Cet appareil est conçu uniquement pour les intégrateurs OEM dans les conditions suivantes:

Le module émetteur peut ne pas être coïmplanté avec un autre émetteur ou antenne.
Tant que les 1 condition ci-dessus sont remplies, des essais supplémentaires sur l'émetteur ne seront pas nécessaires. Toutefois, l'intégrateur OEM est toujours responsable des essais sur son produit final pour toutes exigences de conformité supplémentaires requis pour ce module installé.

Important Note:
In the event that these conditions cannot be met (for example certain laptop configurations or co-location with another transmitter), then the Canada authorization is no longer considered valid and the ISED cannot be used on the final product. In these circumstances, the OEM integrator will be responsible for re-evaluating the end product (including the transmitter) and obtaining a separate Canada authorization.
Any company of the host device which install this modular with limit modular approval should perform the test of radiated emission and spurious emission according to RSS-247 and RSS-Gen requirement, only if the test result comply with RSS-247 and RSS-Gen requirement, then the host can be sold legally.
Note Importante:
Dans le cas où ces conditions ne peuvent être satisfaites (par exemple pour certaines configurations d'ordinateur portable ou de certaines co-localisation avec un autre émetteur), l'autorisation du Canada n'est plus considéré comme valide et l' ISED ne peut pas être utilisé sur le produit final. Dans ces circonstances, l'intégrateur OEM sera chargé de réévaluer le produit final (y compris l'émetteur) et l'obtention d'une autorisation distincte au Canada.
toute entreprise de l'hôte qui installent ce dispositif modulaire avec limite approbation devrait effectuer l'essai des modules et des rayonnements non essentiels des émissions rayonnées selon rss-247 et le cnr - gen, seulement si le résultat d'essai conforme rss-247 et le cnr - gen, puis l'hôte peut être vendu légalement.

End Product Labeling
The final end product must be labeled in a visible area with the following: Contains IC: 20544-AVI1010B.
Plaque signalétique du produit final
Le produit final doit être étiqueté dans un endroit visible avec l'inscription suivante: Contient des IC: 20544-AVI1010B.

Manual Information to the End User
The OEM integrator has to be aware not to provide information to the end user regarding how to install or remove this RF module in the user’s manual of the end product which integrates this module.
The end user manual shall include all required regulatory information/warning as show in this manual.
Manuel d'information à l'utilisateur final
L'intégrateur OEM doit être conscient de ne pas fournir des informations à l'utilisateur final quant à la façon d'installer ou de supprimer ce module RF dans le manuel de l'utilisateur du produit final qui intègre ce module.
Le manuel de l'utilisateur final doit inclure toutes les informations réglementaires requises et avertissements comme indiqué dans ce manuel.