System Check_Head_835MHz

DUT: D835V2-4d167

Communication System: CW; Frequency: 835 MHz;Duty Cycle: 1:1
Medium: HSL_850_180508 Medium parameters used: f = 835 MHz; σ = 0.918 S/m; ε_r = 41.488; ρ = 1000 kg/m^3
Ambient Temperature：23.3 ℃; Liquid Temperature：22.3 ℃

DASY5 Configuration
- Probe: EX3DV4 - SN7306; ConvF(9.79, 9.79, 9.79); Calibrated: 2017/7/24;
- Sensor-Surface: 1.4mm (Mechanical Surface Detection)
- Electronics: DAE3 Sn577; Calibrated: 2017/9/25
- Phantom: SAM LEFT; Type: QD000P40CD; Serial: TP:1718
- Measurement SW: DASY52, Version 52.8 (8); SEMCAD X Version 14.6.10 (7373)

Pin=250mW/Area Scan (61x61x1): Interpolated grid: dx=1.500 mm, dy=1.500 mm
Maximum value of SAR (interpolated) = 3.56 W/kg

Pin=250mW/Zoom Scan (5x5x7)/Cube 0: Measurement grid: dx=8mm, dy=8mm, dz=5mm
Reference Value = 65.38 V/m; Power Drift = -0.11 dB
Peak SAR (extrapolated) = 3.82 W/kg
SAR(1 g) = 2.5 W/kg; SAR(10 g) = 1.65 W/kg
Maximum value of SAR (measured) = 3.34 W/kg

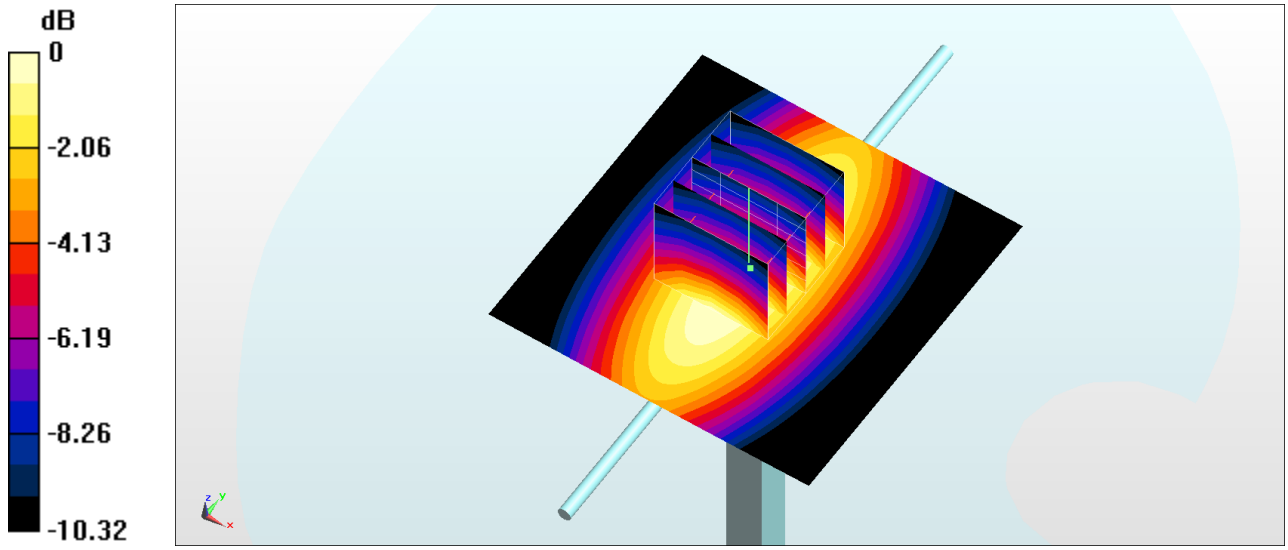

0 dB = 3.34 W/kg = 5.24 dBW/kg

System Check_Head_835MHz

DUT: D835V2-4d167

Communication System: CW ; Frequency: 835 MHz;Duty Cycle: 1:1
Medium: HSL_850_180509 Medium parameters used: f = 835 MHz; σ = 0.877 S/m; ε_r = 40.617; ρ = 1000 kg/m^3
Ambient Temperature：23.1 ℃; Liquid Temperature：22.1 ℃

DASY5 Configuration
- Probe: EX3DV4 - SN3976; ConvF(10.19, 10.19, 10.19); Calibrated: 2018/1/23;
- Sensor-Surface: 1.4mm (Mechanical Surface Detection)
- Electronics: DAE3 Sn495; Calibrated: 2017/5/22
- Phantom: SAM_Left; Type: QD000P40CD; Serial: S/N:1801
- Measurement SW: DASY52, Version 52.10 (0); SEMCAD X Version 14.6.10 (7417)

Pin=250mW/Area Scan (61x61x1): Interpolated grid: dx=1.500 mm, dy=1.500 mm
Maximum value of SAR (interpolated) = 3.53 W/kg

Pin=250mW/Zoom Scan (5x5x7)/Cube 0: Measurement grid: dx=8mm, dy=8mm, dz=5mm
Reference Value = 66.66 V/m; Power Drift = -0.12 dB
Peak SAR (extrapolated) = 3.38 W/kg
SAR(1 g) = 2.24 W/kg; SAR(10 g) = 1.48 W/kg
Maximum value of SAR (measured) = 2.97 W/kg

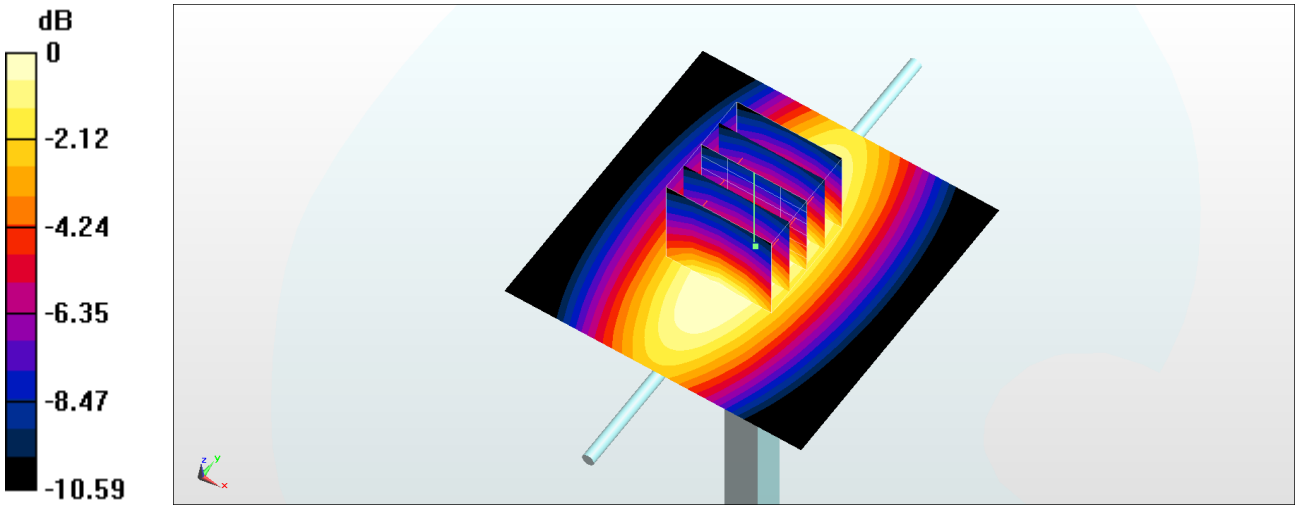

0 dB = 2.97 W/kg = 4.73 dBW/kg

System Check_Body_835MHz

DUT: D835V2-4d167

Communication System: CW; Frequency: 835 MHz;Duty Cycle: 1:1
Medium: MSL_850_180506 Medium parameters used: f = 835 MHz; σ = 0.975 S/m; ε_r = 56.301; ρ = 1000 kg/m^3
Ambient Temperature：23.3 ℃; Liquid Temperature：22.3 ℃

DASY5 Configuration
- Probe: EX3DV4 - SN7306; ConvF(9.85, 9.85, 9.85); Calibrated: 2017/7/24;
- Sensor-Surface: 1.4mm (Mechanical Surface Detection)
- Electronics: DAE3 Sn577; Calibrated: 2017/9/25
- Phantom: SAM LEFT; Type: QD000P40CD; Serial: TP:1718
- Measurement SW: DASY52, Version 52.8 (8); SEMCAD X Version 14.6.10 (7373)

Pin=250mW/Area Scan (61x61x1): Interpolated grid: dx=1.500 mm, dy=1.500 mm
Maximum value of SAR (interpolated) = 3.25 W/kg

Pin=250mW/Zoom Scan (5x5x7)/Cube 0: Measurement grid: dx=8mm, dy=8mm, dz=5mm
Reference Value = 59.34 V/m; Power Drift = 0.00 dB
Peak SAR (extrapolated) = 3.71 W/kg
SAR(1 g) = 2.4 W/kg; SAR(10 g) = 1.58 W/kg
Maximum value of SAR (measured) = 3.25 W/kg

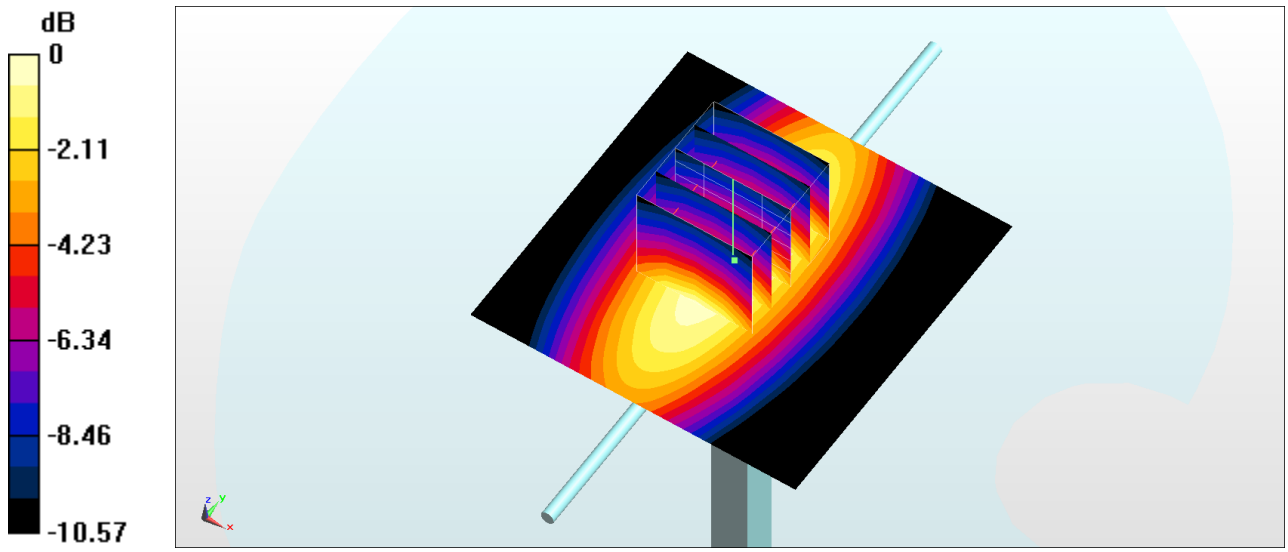

0 dB = 3.25 W/kg = 5.12 dBW/kg

System Check_Head_1750MHz

DUT: D1750V2-1068

Communication System: CW; Frequency: 1750 MHz;Duty Cycle: 1:1
Medium: HSL_1750_180507 Medium parameters used: f = 1750 MHz; σ = 1.369 S/m; ε_r = 41.299; ρ = 1000 kg/m^3
Ambient Temperature：23.3 ℃; Liquid Temperature：22.3 ℃

DASY5 Configuration
- Probe: EX3DV4 - SN7306; ConvF(8.64, 8.64, 8.64); Calibrated: 2017/7/24;
- Sensor-Surface: 1.4mm (Mechanical Surface Detection)
- Electronics: DAE3 Sn577; Calibrated: 2017/9/25
- Phantom: SAM LEFT; Type: QD000P40CD; Serial: TP:1718
- Measurement SW: DASY52, Version 52.8 (8); SEMCAD X Version 14.6.10 (7373)

Pin=250mW/Area Scan (61x61x1): Interpolated grid: dx=1.500 mm, dy=1.500 mm
Maximum value of SAR (interpolated) = 14.4 W/kg

Pin=250mW/Zoom Scan (5x5x7)/Cube 0: Measurement grid: dx=8mm, dy=8mm, dz=5mm
Reference Value = 105.7 V/m; Power Drift = -0.00 dB
Peak SAR (extrapolated) = 17.0 W/kg
SAR(1 g) = 9.42 W/kg; SAR(10 g) = 5.09 W/kg
Maximum value of SAR (measured) = 13.9 W/kg

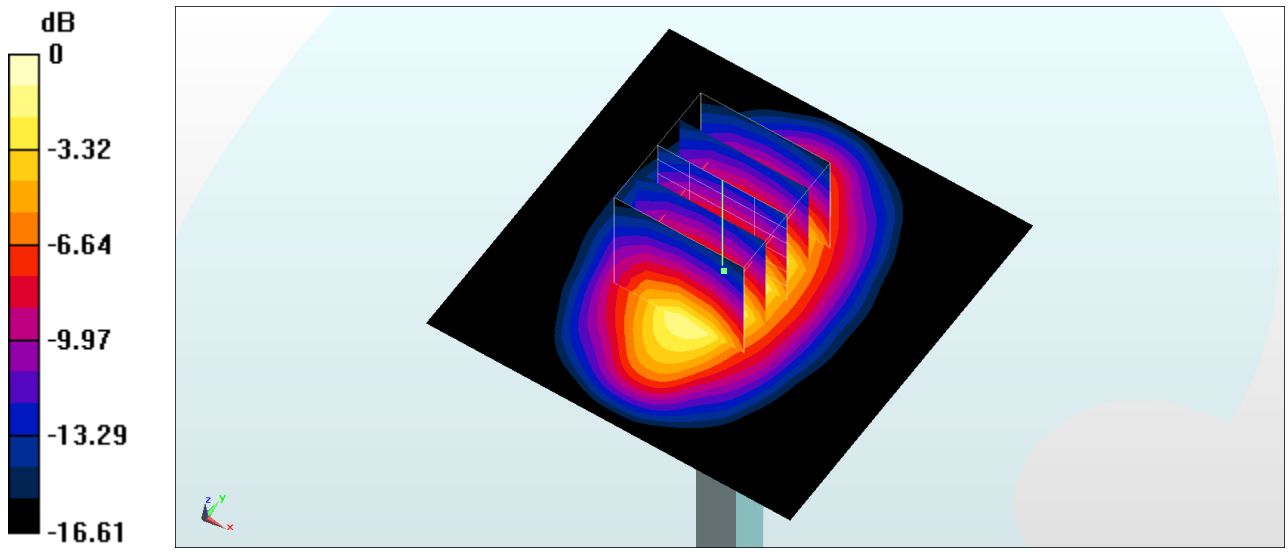

0 dB = 13.9 W/kg = 11.43 dBW/kg

System Check_Head_1750MHz

DUT: D1750V2-1068

Communication System: CW; Frequency: 1750 MHz;Duty Cycle: 1:1
Medium: HSL_1750_180523 Medium parameters used: f = 1750 MHz; σ = 1.368 S/m; ε_r = 40.053; ρ = 1000 kg/m^3
Ambient Temperature：23.3 ℃; Liquid Temperature：22.3 ℃

DASY5 Configuration:
- Probe: EX3DV4 - SN7306; ConvF(8.64, 8.64, 8.64); Calibrated: 2017/7/24;
- Sensor-Surface: 1.4mm (Mechanical Surface Detection)
- Electronics: DAE3 Sn577; Calibrated: 2017/9/25
- Phantom: SAM-Right; Type: SAM; Serial: TP-1503
- Measurement SW: DASY52, Version 52.10 (0);SEMCAD X Version 14.6.10 (7417)

Pin=250mW/Area Scan (61x61x1): Interpolated grid: dx=1.500 mm, dy=1.500 mm
Maximum value of SAR (interpolated) = 14.4 W/kg

Pin=250mW/Zoom Scan (5x5x7)/Cube 0: Measurement grid: dx=8mm, dy=8mm, dz=5mm
Reference Value = 105.7 V/m; Power Drift = -0.02 dB
Peak SAR (extrapolated) = 17.0 W/kg
SAR(1 g) = 9.41 W/kg; SAR(10 g) = 5.08 W/kg
Maximum value of SAR (measured) = 13.9 W/kg

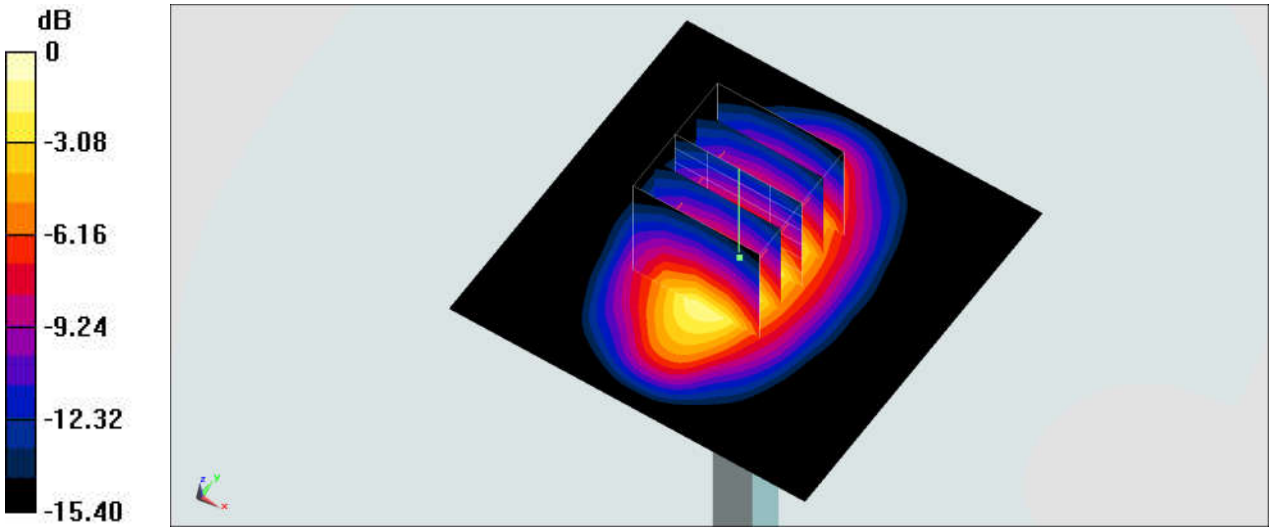

0 dB = 13.9 W/kg = 11.43 dBW/kg

System Check_Body_1750MHz

DUT: D1750V2-1068

Communication System: CW; Frequency: 1750 MHz;Duty Cycle: 1:1
Medium: MSL_1750_180505 Medium parameters used: f = 1750 MHz; σ = 1.492 S/m; ε_r = 52.638; ρ = 1000 kg/m^3
Ambient Temperature：23.5 ℃; Liquid Temperature：22.5 ℃

DASY5 Configuration
- Probe: EX3DV4 - SN7306; ConvF(8.29, 8.29, 8.29); Calibrated: 2017/7/24;
- Sensor-Surface: 1.4mm (Mechanical Surface Detection)
- Electronics: DAE3 Sn577; Calibrated: 2017/9/25
- Phantom: SAM LEFT; Type: QD000P40CD; Serial: TP:1718
- Measurement SW: DASY52, Version 52.8 (8); SEMCAD X Version 14.6.10 (7373)

Pin=250mW/Area Scan (61x61x1): Interpolated grid: dx=1.500 mm, dy=1.500 mm
Maximum value of SAR (interpolated) = 13.9 W/kg

Pin=250mW/Zoom Scan (5x5x7)/Cube 0: Measurement grid: dx=8mm, dy=8mm, dz=5mm
Reference Value = 101.0 V/m; Power Drift = -0.01 dB
Peak SAR (extrapolated) = 16.6 W/kg
SAR(1 g) = 9.33 W/kg; SAR(10 g) = 4.99 W/kg
Maximum value of SAR (measured) = 14.2 W/kg

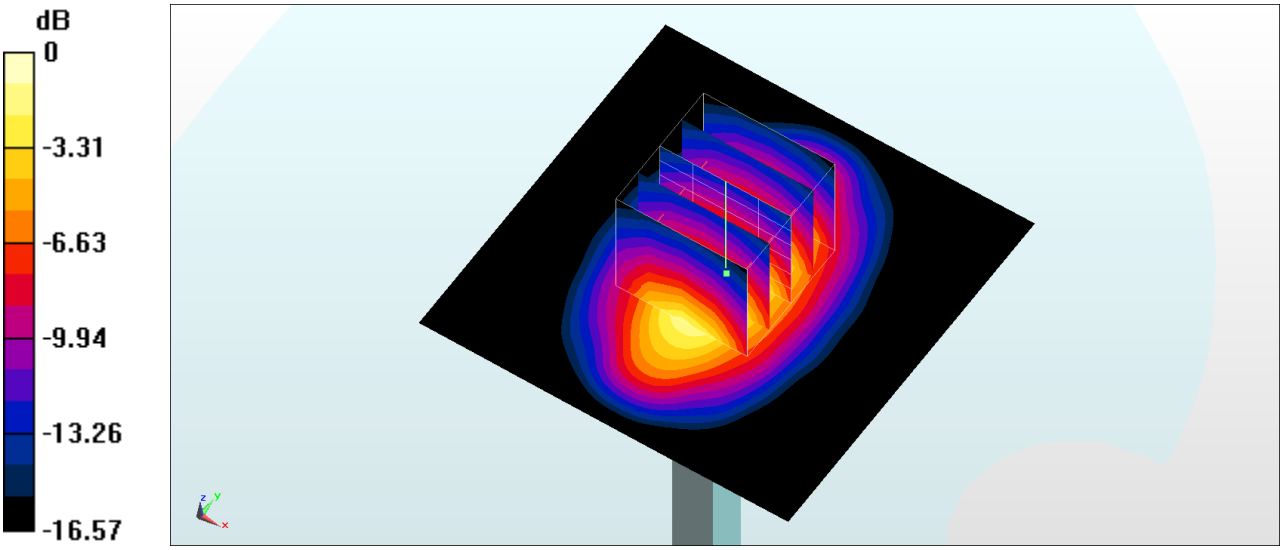

0 dB = 14.2 W/kg = 11.52 dBW/kg

Test Laboratory: Sporton International Inc. SAR/HAC Testing Lab Date: 2018/5/23

System Check_Body_1750MHz

DUT: D1750V2-1068

Communication System: CW; Frequency: 1750 MHz;Duty Cycle: 1:1
Medium: MSL_1750_180523 Medium parameters used: f = 1750 MHz; σ = 1.464 S/m; ε_r = 55.03; ρ = 1000 kg/m^3
Ambient Temperature：23.3 ℃; Liquid Temperature：22.3 ℃

DASY5 Configuration:
- Probe: EX3DV4 - SN7306; ConvF(8.29, 8.29, 8.29); Calibrated: 2017/7/24;
- Sensor-Surface: 1.4mm (Mechanical Surface Detection)
- Electronics: DAE3 Sn577; Calibrated: 2017/9/25
- Phantom: SAM_Left; Type: QD000P40CD; Serial: TP:1431
- Measurement SW: DASY52, Version 52.10 (0);SEMCAD X Version 14.6.10 (7417)

Pin=250mW/Area Scan (61x61x1): Interpolated grid: dx=1.500 mm, dy=1.500 mm
Maximum value of SAR (interpolated) = 13.6 W/kg

Pin=250mW/Zoom Scan (5x5x7)/Cube 0: Measurement grid: dx=8mm, dy=8mm, dz=5mm
Reference Value = 101.0 V/m; Power Drift = -0.02 dB
Peak SAR (extrapolated) = 16.3 W/kg
SAR(1 g) = 9.16 W/kg; SAR(10 g) = 4.9 W/kg
Maximum value of SAR (measured) = 13.9 W/kg

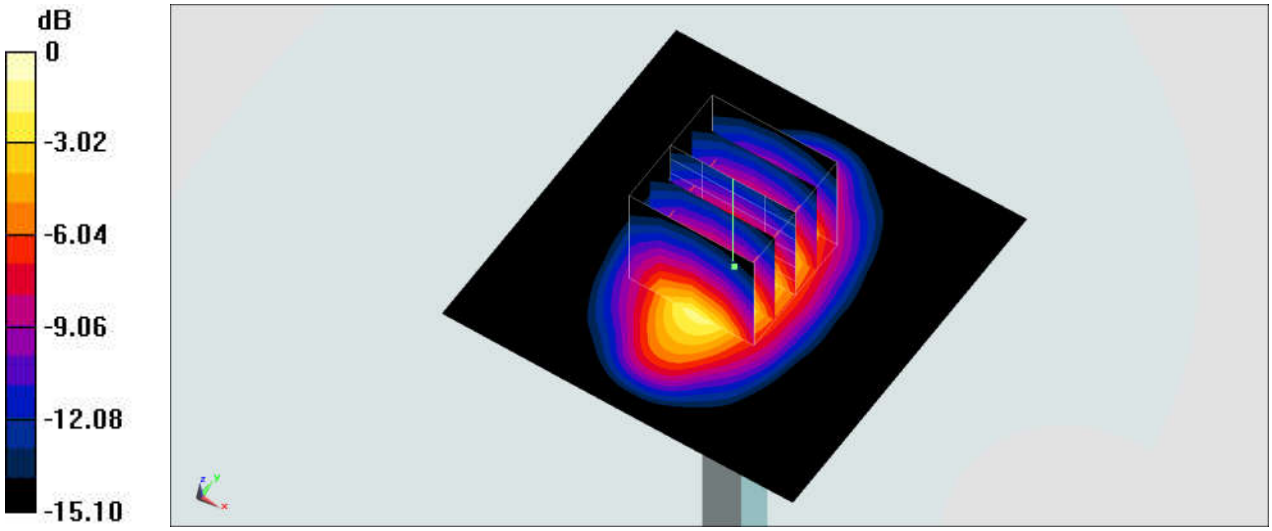

0 dB = 13.9 W/kg = 11.43 dBW/kg

System Check_Head_1900MHz

DUT: D1900V2-5d041

Communication System: CW; Frequency: 1900 MHz;Duty Cycle: 1:1
Medium: HSL_1900_180507 Medium parameters used: f = 1900 MHz; σ = 1.428 S/m; ε_r = 39.951; ρ = 1000 kg/m^3
Ambient Temperature：23.3 ℃; Liquid Temperature：22.3 ℃

DASY5 Configuration
- Probe: EX3DV4 - SN7306; ConvF(8.34, 8.34, 8.34); Calibrated: 2017/7/24;
- Sensor-Surface: 1.4mm (Mechanical Surface Detection)
- Electronics: DAE3 Sn577; Calibrated: 2017/9/25
- Phantom: SAM LEFT; Type: QD000P40CD; Serial: TP:1718
- Measurement SW: DASY52, Version 52.8 (8); SEMCAD X Version 14.6.10 (7373)

Pin=250mW/Area Scan (61x61x1): Interpolated grid: dx=1.500 mm, dy=1.500 mm
Maximum value of SAR (interpolated) = 16.3 W/kg

Pin=250mW/Zoom Scan (5x5x7)/Cube 0: Measurement grid: dx=8mm, dy=8mm, dz=5mm
Reference Value = 109.7 V/m; Power Drift = -0.03 dB
Peak SAR (extrapolated) = 19.5 W/kg
SAR(1 g) = 10.3 W/kg; SAR(10 g) = 5.37 W/kg
Maximum value of SAR (measured) = 16.0 W/kg

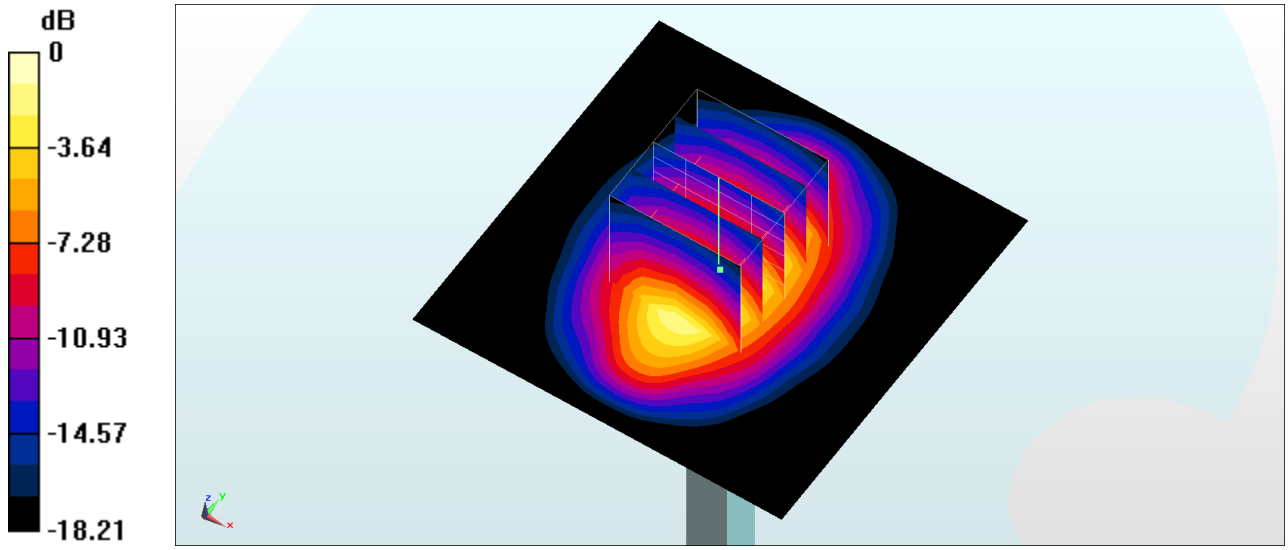

0 dB = 16.0 W/kg = 12.04 dBW/kg

System Check_Body_1900MHz

DUT: D1900V2-5d041

Communication System: CW; Frequency: 1900 MHz;Duty Cycle: 1:1
Medium: MSL_1900_180505 Medium parameters used: f = 1900 MHz; σ = 1.554 S/m; ε_r = 51.75; ρ = 1000 kg/m^3
Ambient Temperature：23.7 ℃; Liquid Temperature：22.7 ℃

DASY5 Configuration
- Probe: EX3DV4 - SN7306; ConvF(7.98, 7.98, 7.98); Calibrated: 2017/7/24;
- Sensor-Surface: 1.4mm (Mechanical Surface Detection)
- Electronics: DAE3 Sn577; Calibrated: 2017/9/25
- Phantom: SAM LEFT; Type: QD000P40CD; Serial: TP:1718
- Measurement SW: DASY52, Version 52.8 (8); SEMCAD X Version 14.6.10 (7373)

Pin=250mW/Area Scan (61x61x1): Interpolated grid: dx=1.500 mm, dy=1.500 mm
Maximum value of SAR (interpolated) = 14.6 W/kg

Pin=250mW/Zoom Scan (5x5x7)/Cube 0: Measurement grid: dx=8mm, dy=8mm, dz=5mm
Reference Value = 101.5 V/m; Power Drift = -0.03 dB
Peak SAR (extrapolated) = 17.6 W/kg
SAR(1 g) = 9.61 W/kg; SAR(10 g) = 4.98 W/kg
Maximum value of SAR (measured) = 14.8 W/kg

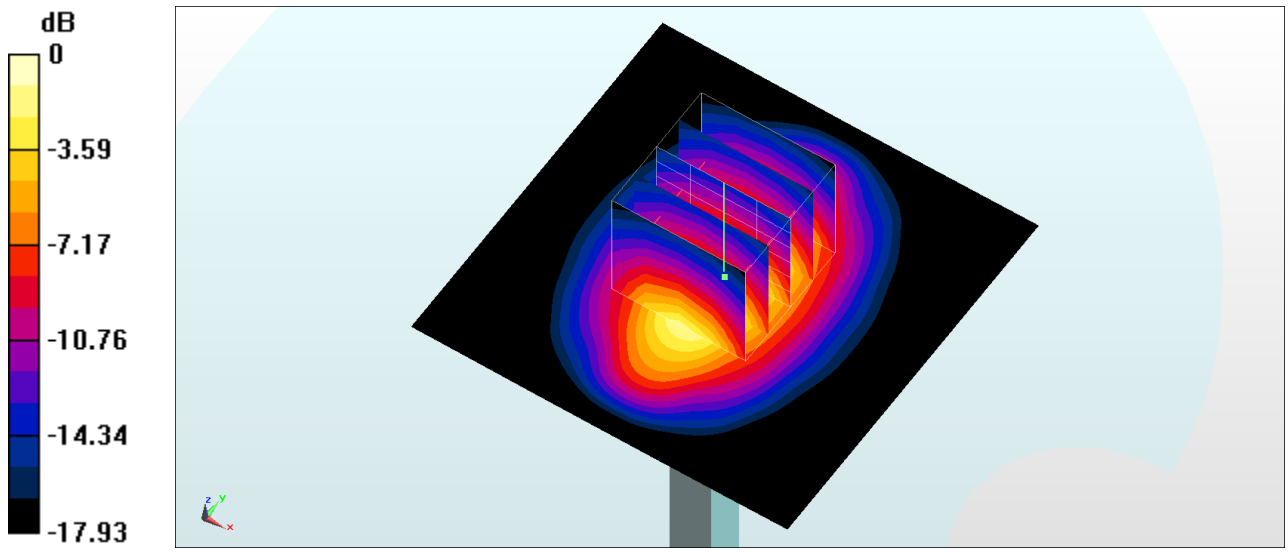

0 dB = 14.8 W/kg = 11.70 dBW/kg

System Check_Head_2450MHz

DUT: D2450V2-736

Communication System: CW; Frequency: 2450 MHz;Duty Cycle: 1:1
Medium: HSL_2450_180510 Medium parameters used: f = 2450 MHz; σ = 1.786 S/m; ε_r = 38.781; ρ = 1000 kg/m^3
Ambient Temperature：23.4 ℃; Liquid Temperature：22.4 ℃

DASY5 Configuration
- Probe: EX3DV4 - SN3976; ConvF(7.75, 7.75, 7.75); Calibrated: 2018/1/23;
- Sensor-Surface: 1.4mm (Mechanical Surface Detection)
- Electronics: DAE3 Sn495; Calibrated: 2017/5/22
- Phantom: SAM_Right; Type: QD000P40CD; Serial: S/N:1796
- Measurement SW: DASY52, Version 52.10 (0); SEMCAD X Version 14.6.10 (7417)

Pin=250mW/Area Scan (61x61x1): Interpolated grid: dx=1.200 mm, dy=1.200 mm
Maximum value of SAR (interpolated) = 18.4 W/kg

Pin=250mW/Zoom Scan (7x7x7)/Cube 0: Measurement grid: dx=5mm, dy=5mm, dz=5mm
Reference Value = 92.97 V/m; Power Drift = 0.17 dB
Peak SAR (extrapolated) = 24.2 W/kg
SAR(1 g) = 11.9 W/kg; SAR(10 g) = 5.56 W/kg
Maximum value of SAR (measured) = 18.0 W/kg

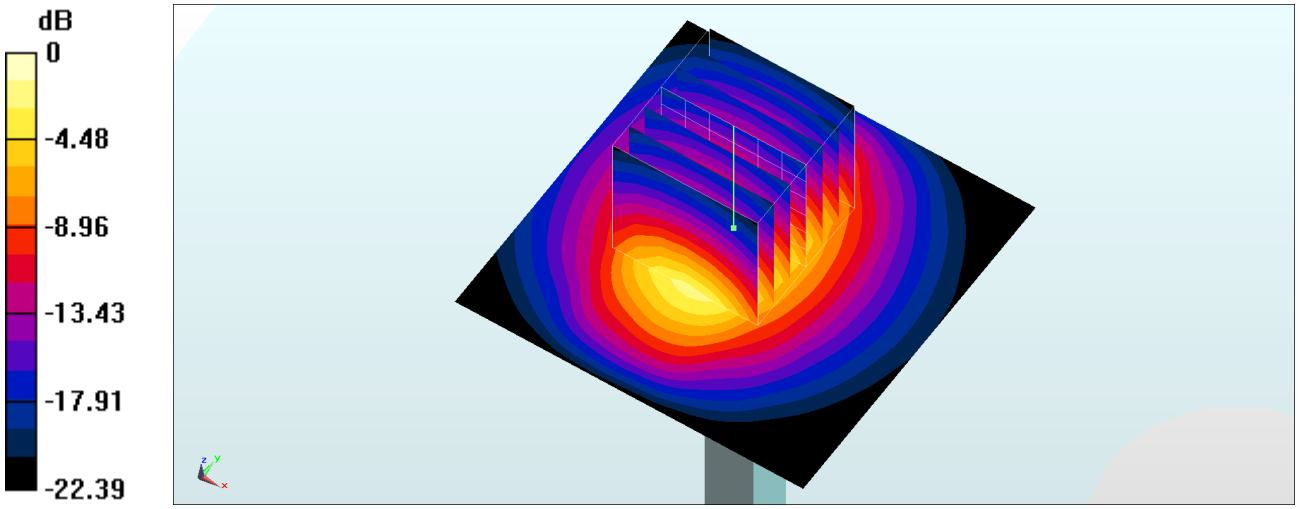

0 dB = 18.0 W/kg = 12.55 dBW/kg

System Check_Head_2450MHz

DUT: D2450V2-736

Communication System: CW; Frequency: 2450 MHz;Duty Cycle: 1:1
Medium: HSL_2450_180510 Medium parameters used: f = 2450 MHz; σ = 1.807 S/m; ε_r = 39.362; ρ = 1000 kg/m^3
Ambient Temperature：23.5 ℃; Liquid Temperature：22.5 ℃

DASY5 Configuration:
- Probe: EX3DV4 - SN7306; ConvF(7.49, 7.49, 7.49); Calibrated: 2017/7/24;
- Sensor-Surface: 1.4mm (Mechanical Surface Detection)
- Electronics: DAE3 Sn577; Calibrated: 2017/9/25
- Phantom: SAM_Left; Type: QD000P40CD; Serial: TP:1815
- Measurement SW: DASY52, Version 52.10 (0);SEMCAD X Version 14.6.10 (7417)

Pin=250mW/Area Scan (71x71x1): Interpolated grid: dx=1.200 mm, dy=1.200 mm
Maximum value of SAR (interpolated) = 19.5 W/kg

Pin=250mW/Zoom Scan (7x7x7)/Cube 0: Measurement grid: dx=5mm, dy=5mm, dz=5mm
Reference Value = 110.6 V/m; Power Drift = 0.04 dB
Peak SAR (extrapolated) = 26.1 W/kg
SAR(1 g) = 12.7 W/kg; SAR(10 g) = 5.95 W/kg
Maximum value of SAR (measured) = 21.2 W/kg

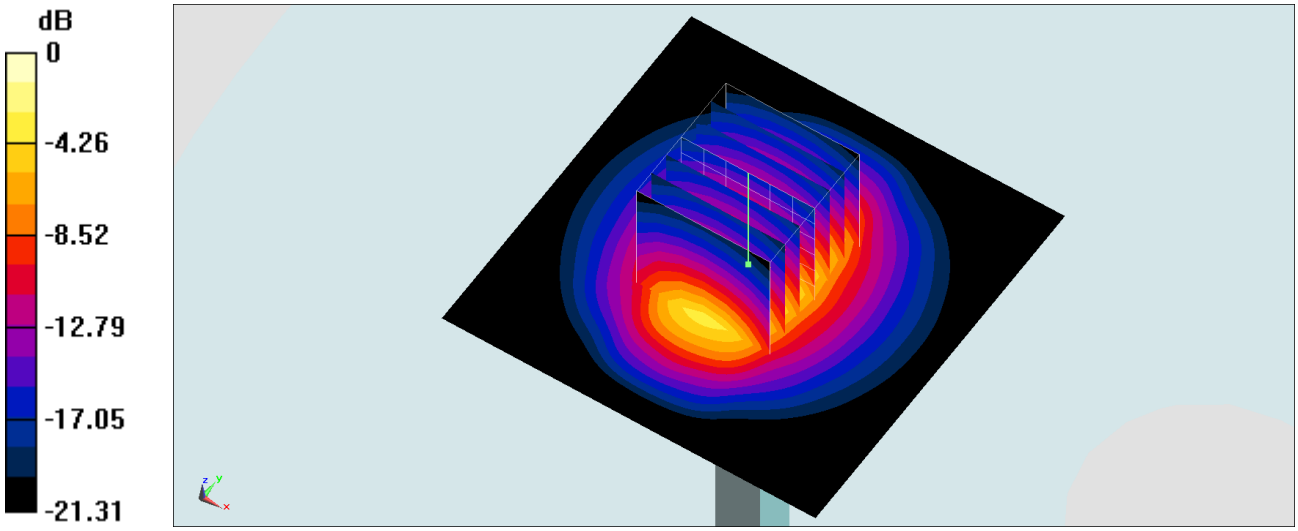

0 dB = 21.2 W/kg = 13.26 dBW/kg

System Check_Body_2450MHz

DUT: D2450V2-736

Communication System: CW; Frequency: 2450 MHz;Duty Cycle: 1:1
Medium: MSL_2450_180510 Medium parameters used: f = 2450 MHz; σ = 1.937 S/m; ε_r = 53.271; ρ = 1000 kg/m^3
Ambient Temperature：23.4 ℃; Liquid Temperature：22.4 ℃

DASY5 Configuration
- Probe: EX3DV4 - SN3976; ConvF(7.8, 7.8, 7.8); Calibrated: 2018/1/23;
- Sensor-Surface: 1.4mm (Mechanical Surface Detection)
- Electronics: DAE3 Sn495; Calibrated: 2017/5/22
- Phantom: SAM_Left; Type: QD000P40CD; Serial: S/N:1801
- Measurement SW: DASY52, Version 52.10 (0); SEMCAD X Version 14.6.10 (7417)

Pin=250mW/Area Scan (61x61x1): Interpolated grid: dx=1.200 mm, dy=1.200 mm
Maximum value of SAR (interpolated) = 21.5 W/kg

Pin=250mW/Zoom Scan (7x7x7)/Cube 0: Measurement grid: dx=5mm, dy=5mm, dz=5mm
Reference Value = 108.7 V/m; Power Drift = -0.02 dB
Peak SAR (extrapolated) = 26.5 W/kg
SAR(1 g) = 12.8 W/kg; SAR(10 g) = 5.98 W/kg
Maximum value of SAR (measured) = 21.4 W/kg

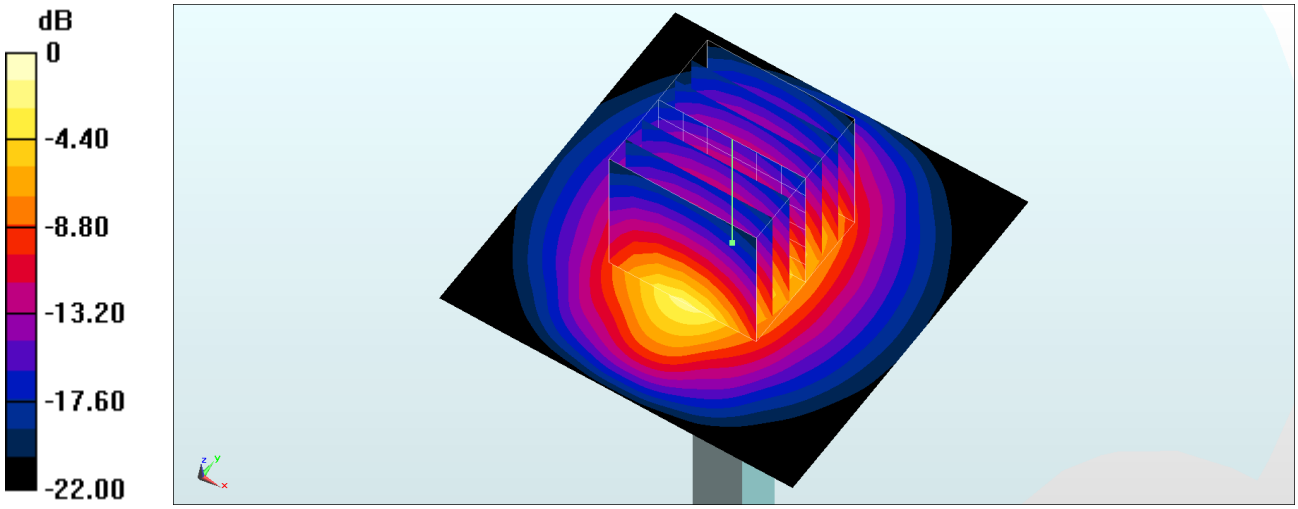

0 dB = 21.4 W/kg = 13.30 dBW/kg

System Check_Head_2600MHz

DUT: D2600V2-1008

Communication System: CW; Frequency: 2600 MHz;Duty Cycle: 1:1
Medium: HSL_2600_180510 Medium parameters used: f = 2600 MHz; σ = 1.953 S/m; ε_r = 38.224; ρ = 1000 kg/m^3
Ambient Temperature：23.4 ℃; Liquid Temperature：22.4 ℃

DASY5 Configuration
- Probe: EX3DV4 - SN3976; ConvF(7.54, 7.54, 7.54); Calibrated: 2018/1/23;
- Sensor-Surface: 1.4mm (Mechanical Surface Detection)
- Electronics: DAE3 Sn495; Calibrated: 2017/5/22
- Phantom: SAM_Right; Type: QD000P40CD; Serial: S/N:1796
- Measurement SW: DASY52, Version 52.10 (0); SEMCAD X Version 14.6.10 (7417)

Pin=250mW/Area Scan (61x61x1): Interpolated grid: dx=1.200 mm, dy=1.200 mm
Maximum value of SAR (interpolated) = 25.5 W/kg

Pin=250mW/Zoom Scan (7x7x7)/Cube 0: Measurement grid: dx=5mm, dy=5mm, dz=5mm
Reference Value = 117.8 V/m; Power Drift = -0.08 dB
Peak SAR (extrapolated) = 31.6 W/kg
SAR(1 g) = 14.7 W/kg; SAR(10 g) = 6.55 W/kg
Maximum value of SAR (measured) = 24.8 W/kg

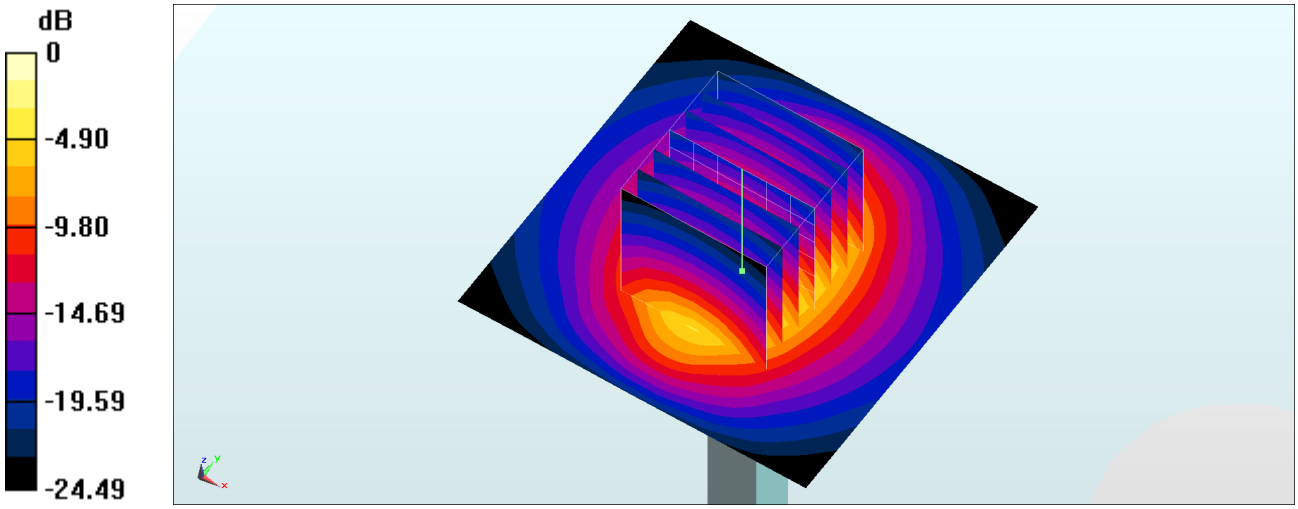

0 dB = 24.8 W/kg = 13.94 dBW/kg

System Check_Head_2600MHz

DUT: D2600V2-1008

Communication System: CW ; Frequency: 2600 MHz;Duty Cycle: 1:1
Medium: HSL_2600_180512 Medium parameters used: f = 2600 MHz; σ = 2.025 S/m; ε_r = 39.375; ρ = 1000 kg/m^3
Ambient Temperature：23.6 ℃; Liquid Temperature：22.6 ℃

DASY5 Configuration:
- Probe: EX3DV4 - SN7306; ConvF(7.36, 7.36, 7.36); Calibrated: 2017/7/24
- Sensor-Surface: 1.4mm (Mechanical Surface Detection)
- Electronics: DAE3 Sn577; Calibrated: 2017/9/25
- Phantom: SAM_Left; Type: QD000P40CD; Serial: TP:1815
- Measurement SW: DASY52, Version 52.10 (1);SEMCAD X Version 14.6.11 (7437)

Pin=250mW/Area Scan (61x61x1): Interpolated grid: dx=1.200 mm, dy=1.200 mm
Maximum value of SAR (interpolated) = 24.9 W/kg

Pin=250mW/Zoom Scan (7x7x7)/Cube 0: Measurement grid: dx=5mm, dy=5mm, dz=5mm
Reference Value = 114.3 V/m; Power Drift = -0.07 dB
Peak SAR (extrapolated) = 31.8 W/kg
SAR(1 g) = 14.3 W/kg; SAR(10 g) = 6.37 W/kg
Maximum value of SAR (measured) = 25.0 W/kg

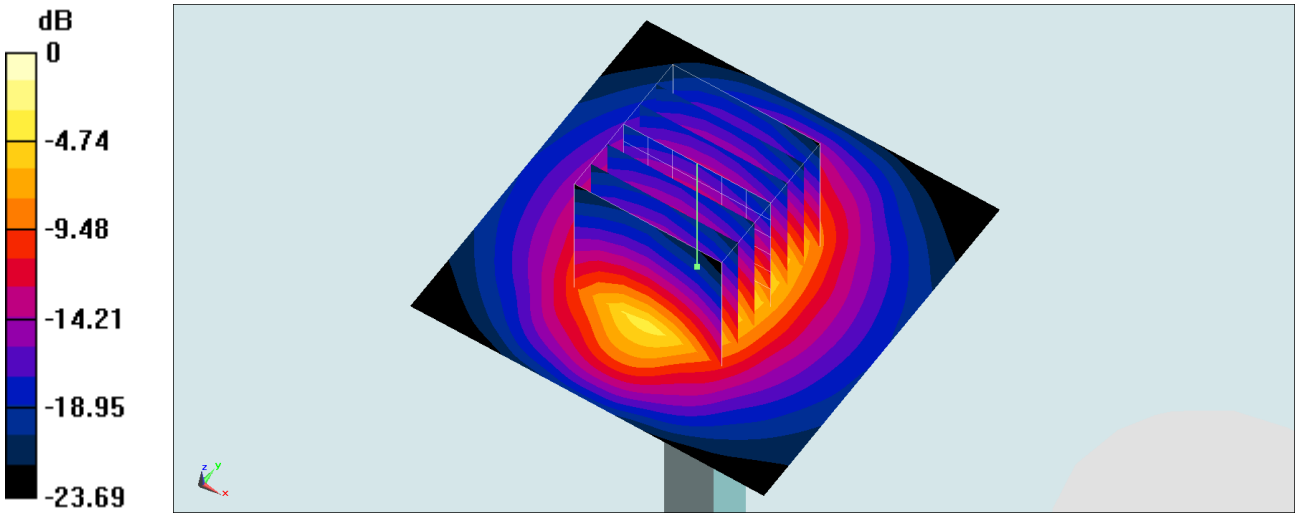

0 dB = 25.0 W/kg = 13.98 dBW/kg

System Check_Body_2600MHz

DUT: D2600V2-1008

Communication System: CW; Frequency: 2600 MHz;Duty Cycle: 1:1
Medium: MSL_2600_180506 Medium parameters used: f = 2600 MHz; σ = 2.186 S/m; ε_r = 50.517; ρ = 1000 kg/m^3
Ambient Temperature：23.4 ℃; Liquid Temperature：22.4 ℃

DASY5 Configuration
- Probe: EX3DV4 - SN7306; ConvF(7.46, 7.46, 7.46); Calibrated: 2017/7/24;
- Sensor-Surface: 1.4mm (Mechanical Surface Detection)
- Electronics: DAE3 Sn577; Calibrated: 2017/9/25
- Phantom: SAM LEFT; Type: QD000P40CD; Serial: TP:1718
- Measurement SW: DASY52, Version 52.8 (8); SEMCAD X Version 14.6.10 (7373)

Pin=250mW/Area Scan (61x61x1): Interpolated grid: dx=1.200 mm, dy=1.200 mm
Maximum value of SAR (interpolated) = 22.1 W/kg

Pin=250mW/Zoom Scan (7x7x7)/Cube 0: Measurement grid: dx=5mm, dy=5mm, dz=5mm
Reference Value = 100.1 V/m; Power Drift = 0.01 dB
Peak SAR (extrapolated) = 30.0 W/kg
SAR(1 g) = 14.1 W/kg; SAR(10 g) = 6.29 W/kg
Maximum value of SAR (measured) = 21.9 W/kg

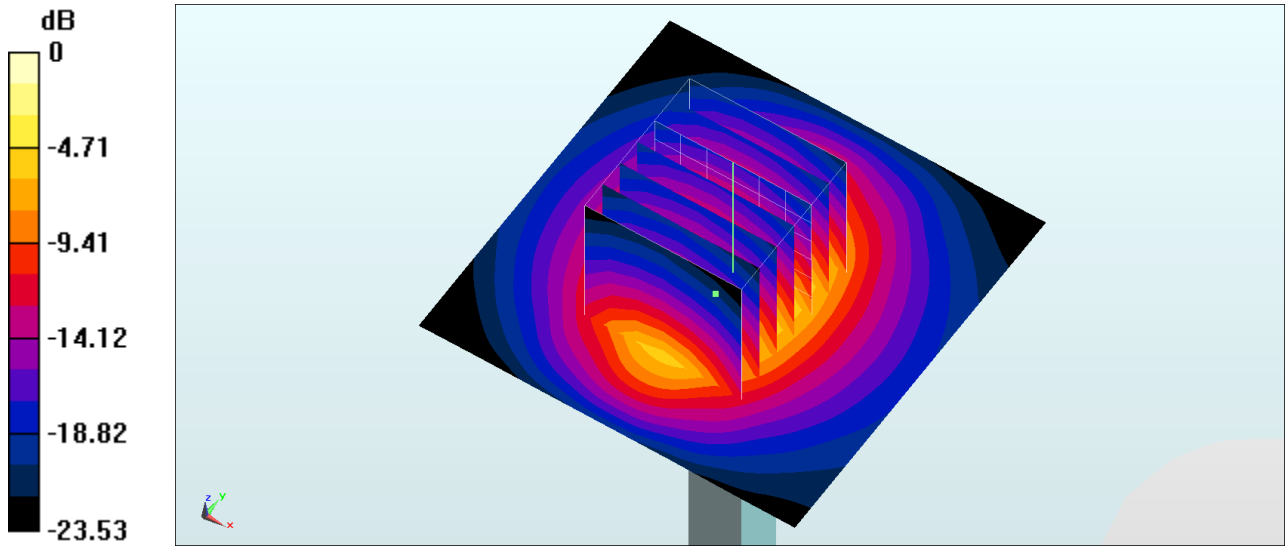

0 dB = 21.9 W/kg = 13.40 dBW/kg

System Check_Body_2600MHz

DUT: D2600V2-1008

Communication System: CW ; Frequency: 2600 MHz;Duty Cycle: 1:1
Medium: MSL_2600_180512 Medium parameters used: f = 2600 MHz; σ = 2.2 S/m; ε_r = 51.819; ρ = 1000 kg/m^3
Ambient Temperature：23.6 ℃; Liquid Temperature：22.6 ℃

DASY5 Configuration:
- Probe: EX3DV4 - SN7306; ConvF(7.46, 7.46, 7.46); Calibrated: 2017/7/24
- Sensor-Surface: 1.4mm (Mechanical Surface Detection)
- Electronics: DAE3 Sn577; Calibrated: 2017/9/25
- Phantom: SAM_Right; Type: QD000P40CD; Serial: 1719
- Measurement SW: DASY52, Version 52.10 (1);SEMCAD X Version 14.6.11 (7437)

Pin=250mW/Area Scan (61x61x1): Interpolated grid: dx=1.200 mm, dy=1.200 mm
Maximum value of SAR (interpolated) = 22.2 W/kg

Pin=250mW/Zoom Scan (7x7x7)/Cube 0: Measurement grid: dx=5mm, dy=5mm, dz=5mm
Reference Value = 100.1 V/m; Power Drift = 0.02 dB
Peak SAR (extrapolated) = 30.2 W/kg
SAR(1 g) = 14.2 W/kg; SAR(10 g) = 6.33 W/kg
Maximum value of SAR (measured) = 22.1 W/kg

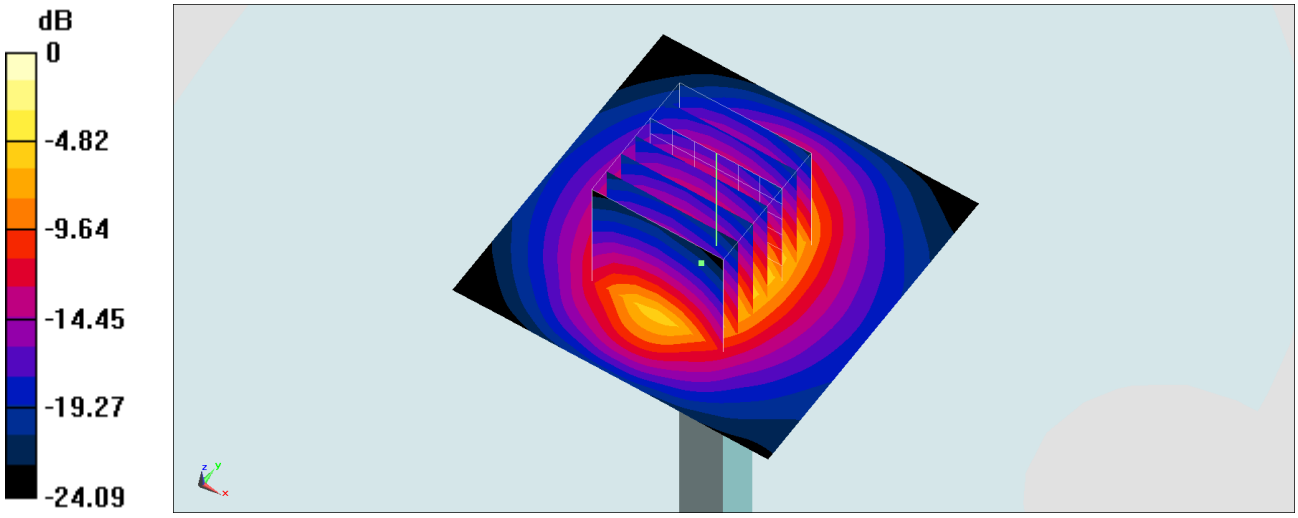

0 dB = 22.1 W/kg = 13.44 dBW/kg