承　　認　　書

SPECIFICATION FOR APPROVAL

客　　戶： CUSTOMER:	紫米
客 戶 料 號： CUST P/N:	**E042A0003801**
泛 亞 料 號： FINE P/N:	
描述： Description:	**E042A0003801　MOUDULE-A11, Φ20.5X44-10TS-0.08X105-28MM-COLB, N=10,D=0.08*105P,L=6.5UH ±5%， DCR≤45MOHM,FINE**
產 品 型 號： DESC:	**Φ20.5x44-10Ts-0.08x105-28mm-COLB**
版　　本： Version:	**A.3**

擬制 PREPARED BY	審核 CHECKED BY	批准 APPROVED BY	客戶承認 CUSTOMER APPROVE
李礼秀 Lixiu Li	蔡纪雨 Jiyu Cai	倪星 Xing Ni	

东莞市泛亚电子有限公司

公司地址：东莞市石碣镇科技东路194号

TEL：0769-22490287 / 22452492

FAX：0769-22499451

E-mail：fineelec@163.com

版本變更履歷

Version Change History

版本 Rev.	變 更 前 Before Change	變 更 後 After Change	更 改 日 期 Change Date	批 准 Approved By
A.0	First Version	----	2019/04/27	Xing Ni
A.1	Chaned Version	Change solder E size from 2-5mm to 1.5-3.5mm	2019/05/14	Xing Ni
A.2	Chaned Version	Change lead length D dimension from 26±1.5mm to 28±1.5mm	2019/06/12	Xing Ni
A.3	Chaned Version	1. Changed model name from Φ **20.5x44-10Ts-0.08x105-26mm-COLB** to **Φ20.5x44-10Ts-0.08x105-28mm-COLB**; 2. Add description.	2019/06/12	Xing Ni

SPECIFICATION

產 品 型 號: DESC	Φ20.5x44-10Ts-0.08x105-28mm-COLB	版本 Rev: A.3	客戶 CUST:	紫米
			泛亚料号 Fine P/N:	
			客户料号 CUST P/N:	E042A0003801

一、尺寸 DIMENSION:(mm)

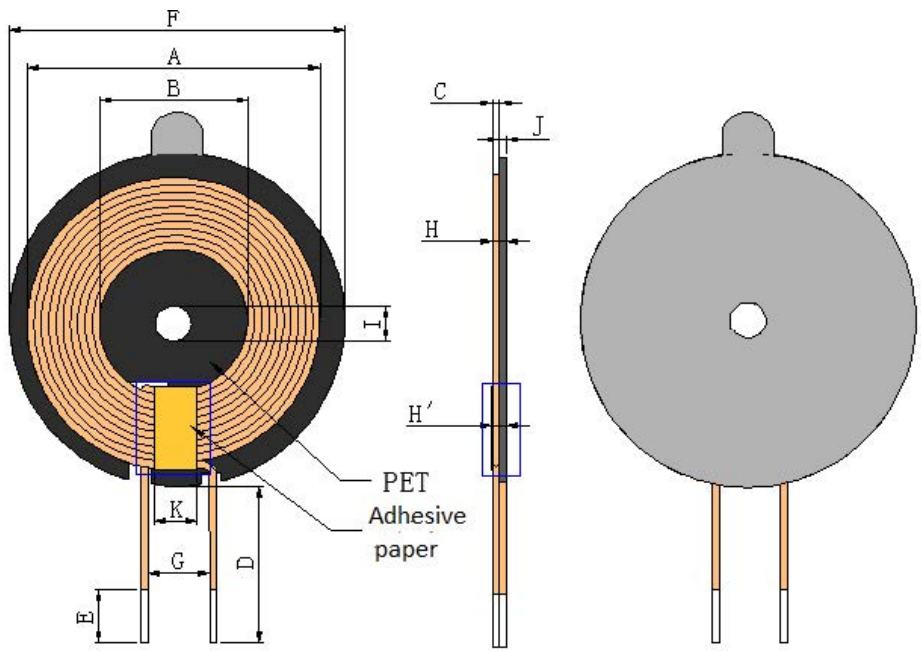

☆ A	44.0±1.0
☆ B	20.5±0.5
C	1.25 Max
☆ D	28±1.5
☆ E	1.5-3.5
☆ F	50±0.5
☆ G	10.0 ref
☆ H	2.0 Max(Release paper not included)
☆ H′	2.2 Max(Release paper not included)
I	5.5±0.5
J	0.6±0.1(Bare)
K	8.0±0.5

Note:

1. The coil is attached to a magnetic sheet, the size of the magnetic sheet is 50±0.5mm, with L double wire groove, with a round hole diameter of 5.5mm, and the thickness of the bare chip is 0. 6±0.1mm;
2. Paste Φ50*5.5*0.05mm black PET matte film on the front of the magnetic sheet, and Φ50*5.5*0.1mm ordinary DS11 double-sided tape on the back, with a release winding thickness of 0.10 mm
3. Wrap 8mm wide high-temperature tape at the outlet position 1.5Ts (three layers), thickness 0.04mm;
4. Only use radiation measurements to confirm compliance with NCC limits on primary wave field strength and incidental wave emissions;

二、原理图 SCHEMATIC DIAGRAM:

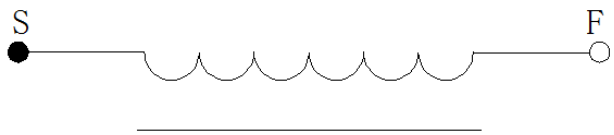

三、绕线参数 Winding Specification:

序号 NO.	端子 TERMINAL		线径 WIRE	圈数 Turns	绕线方向 Winding Direction
1	S	F	丝包线 0.08*105P	10Ts	CW

四、电气特性 ELECTRICAL CHARACTERISTICS:

温度 TEMPERATURE:25±10°C，湿度 RELATIVE HUMIDITY:65±20%

序号 NO.	项目 ITEM	端子 TERMINAL	标准 SPECIFICATION	测试条件 TEST FREQUENCY	测试仪器 TEST EQUIPMENTS
1	IND.	S-F	3.8uH ±10%单独线圈	100KHz/1.0V	LCZ METER 1062B
2	IND.	S-F ☆	6.5uH ±5%加磁片	100KHz/1.0V	LCZ METER 1062B
3	DCR	S-F ☆	≤45mΩ		LCZ METER 502B

擬制/日期 PREPARED BY/DATE	審核/日期 CHECKED BY/DATE
李礼秀/ Lixiu Li 2019/06/12	蔡纪雨/ Jiyu Cai 2019/06/12

SPECIFICATION

產 品 型 號: DESC	Φ20.5x44-10Ts-0.08x105-28mm-COLB	版本 Rev: A.3	客戶 CUST:	紫米
			泛亚料号 Fine P/N:	
			客户料号 CUST P/N:	E042A0003801

五、包装 PACKONG:

5.1 包装图片 Packing pictures:

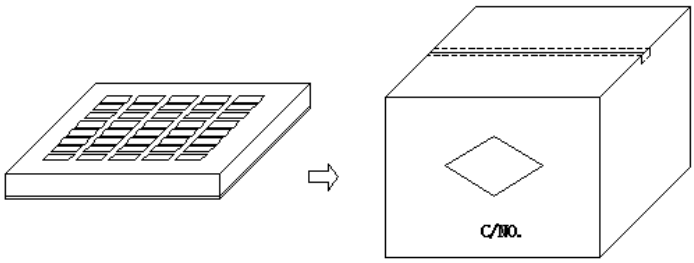

5.2 包装数量及规格 Packing Quantity:

项目 Item	数量 Quantity	材料规格 Material
盒 Box	240 Pcs	370*265*55mm
箱 Big Carton	1200 Pcs	420*270*310mm

5.3 包装以现有包装盘为参照标准，以实际出货包装为准,如有特需要求可以定制。

The packaging shall be based on the existing packing plate and the actual delivery package shall prevail. If there is any requirement, we can customize it.

六、材料清单 Material list:

序号 number	材 料 名 称 Material name	品 名 描 述 Description	制 造 商 Manufacturer
1	Silk covered wire 0.08*105 strands	Acetone wire covered wire 0.08*105 strands	Fushi or weifeng
2	Lead-free tin bar	Lead-free tin bar	Yuexing
3	Magnetic disk	Φ50*5.5*0.6mm manganese zinc hard magnetic sheet	Dingmingda
4	Glue	201 Glue	Tianbaoli
5	High temperature tape	8mm High temperature tape	Nanrui
6	PET matte film	Φ50*5.5*0.05mm PET matte film	Nanrui
7	Ordinary DS11 adhesive	Φ50*5.5*0.1mm ordinary double-sided tape	Nanrui

擬制/日期 PREPARED BY/DATE	審核/日期 CHECKED BY/DATE
李礼秀/Lixiu Li 2019/06/12	蔡纪雨/Jiyu Cai 2019/06/12

SPECIFICATION

產 品 型 號: DESC	Φ20.5x44-10Ts-0.08x105-28mm-COLB	版本 Rev: A.3	客戶 CUST:	紫米
			泛亚料号 Fine P/N:	
			客户料号 CUST P/N:	E042A0003801

七、Enclose:

7.1 Magnetic disc size:

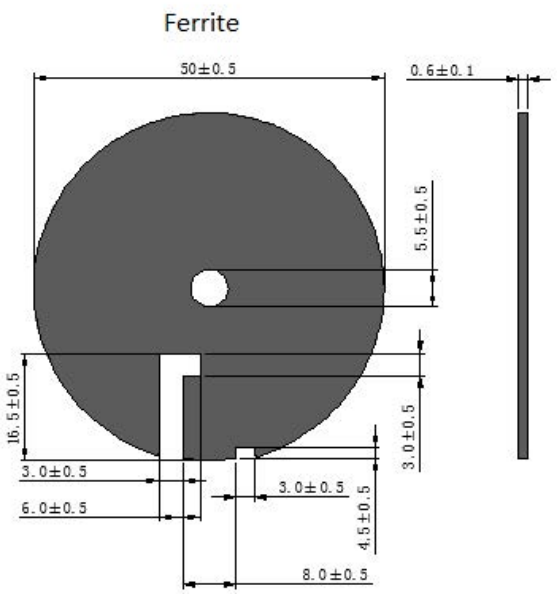

7.2 PET matte film size:

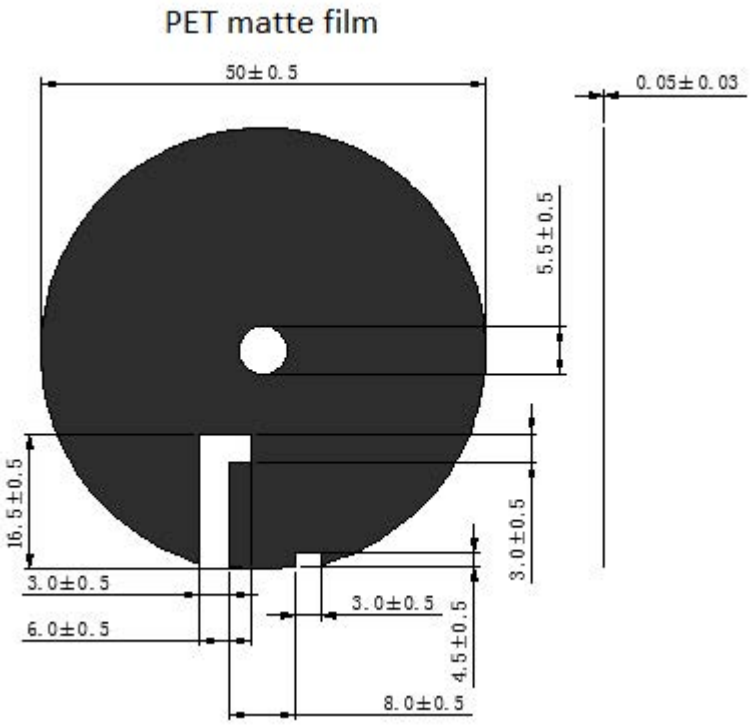

擬制/日期 PREPARED BY/DATE	審核/日期 CHECKED BY/DATE
李礼秀/ Lixiu Li 2019/06/12	蔡纪雨/ Jiyu Cai 2019/06/12