System Check_Head_835MHz

DUT: D835V2-4d167

Communication System: CW; Frequency: 835 MHz;Duty Cycle: 1:1
Medium: HSL_850_180515 Medium parameters used: f = 835 MHz; σ = 0.898 S/m; ε_r = 42.208; ρ = 1000 kg/m^3
Ambient Temperature：23.3 ℃; Liquid Temperature：22.3 ℃

DASY5 Configuration:
- Probe: ES3DV3 - SN3270; ConvF(6.18, 6.18, 6.18); Calibrated: 2017/9/25;
- Sensor-Surface: 3mm (Mechanical Surface Detection)
- Electronics: DAE4 Sn853; Calibrated: 2017/7/19
- Phantom: SAM_Left; Type: QD000P40CD; Serial: TP:1477
- Measurement SW: DASY52, Version 52.10 (0);SEMCAD X Version 14.6.10 (7417)

Pin=250mW/Area Scan (61x61x1): Interpolated grid: dx=1.500 mm, dy=1.500 mm
Maximum value of SAR (interpolated) = 3.02 W/kg

Pin=250mW/Zoom Scan (5x5x7)/Cube 0: Measurement grid: dx=8mm, dy=8mm, dz=5mm
Reference Value = 59.59 V/m; Power Drift = 0.04 dB
Peak SAR (extrapolated) = 3.89 W/kg
SAR(1 g) = 2.51 W/kg; SAR(10 g) = 1.63 W/kg
Maximum value of SAR (measured) = 3.04 W/kg

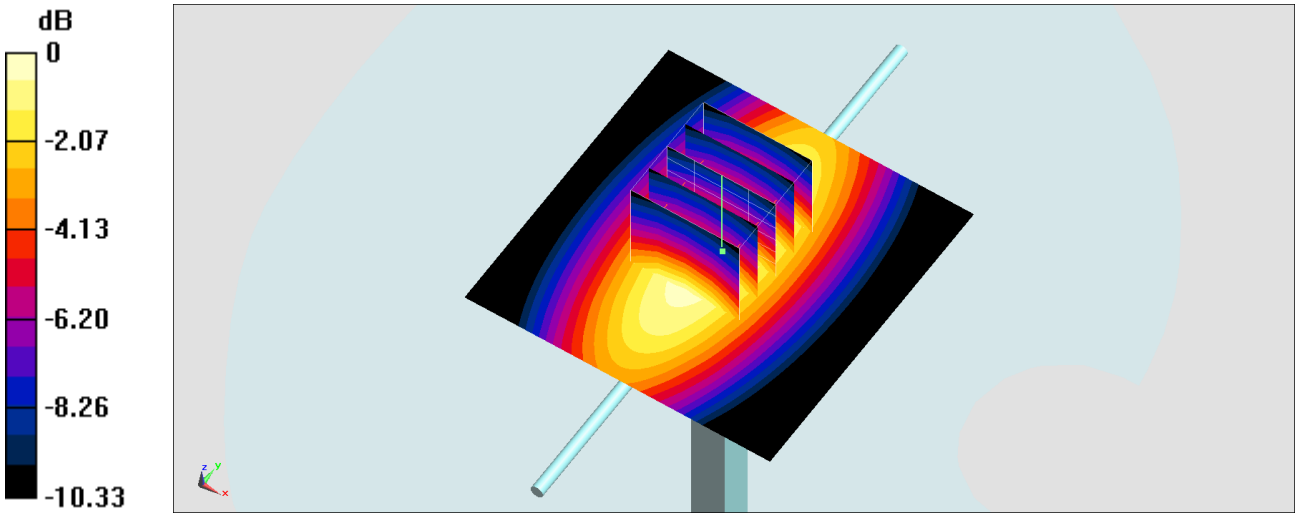

0 dB = 3.04 W/kg = 4.83 dBW/kg

System Check_Head_835MHz

DUT: D835V2-4d167

Communication System: CW; Frequency: 835 MHz;Duty Cycle: 1:1
Medium: HSL_850_180520 Medium parameters used: f = 835 MHz; σ = 0.874 S/m; ε_r = 42.727; ρ = 1000 kg/m^3
Ambient Temperature：23.8 ℃; Liquid Temperature：22.8 ℃

DASY5 Configuration:
- Probe: EX3DV4 - SN3554; ConvF(8.16, 8.16, 8.16); Calibrated: 2017/9/29;
- Sensor-Surface: 1.4mm (Mechanical Surface Detection)
- Electronics: DAE4 Sn1424; Calibrated: 2018/1/18
- Phantom: SAM_RIGHT; Type: QD000P40CD; Serial: 1719
- Measurement SW: DASY52, Version 52.10 (0);SEMCAD X Version 14.6.10 (7417)

Pin=250mW/Area Scan (61x61x1): Interpolated grid: dx=1.500 mm, dy=1.500 mm
Maximum value of SAR (interpolated) = 3.20 W/kg

Pin=250mW/Zoom Scan (5x5x7)/Cube 0: Measurement grid: dx=8mm, dy=8mm, dz=5mm
Reference Value = 63.85 V/m; Power Drift = -0.03 dB
Peak SAR (extrapolated) = 3.53 W/kg
SAR(1 g) = 2.42 W/kg; SAR(10 g) = 1.61 W/kg
Maximum value of SAR (measured) = 3.18 W/kg

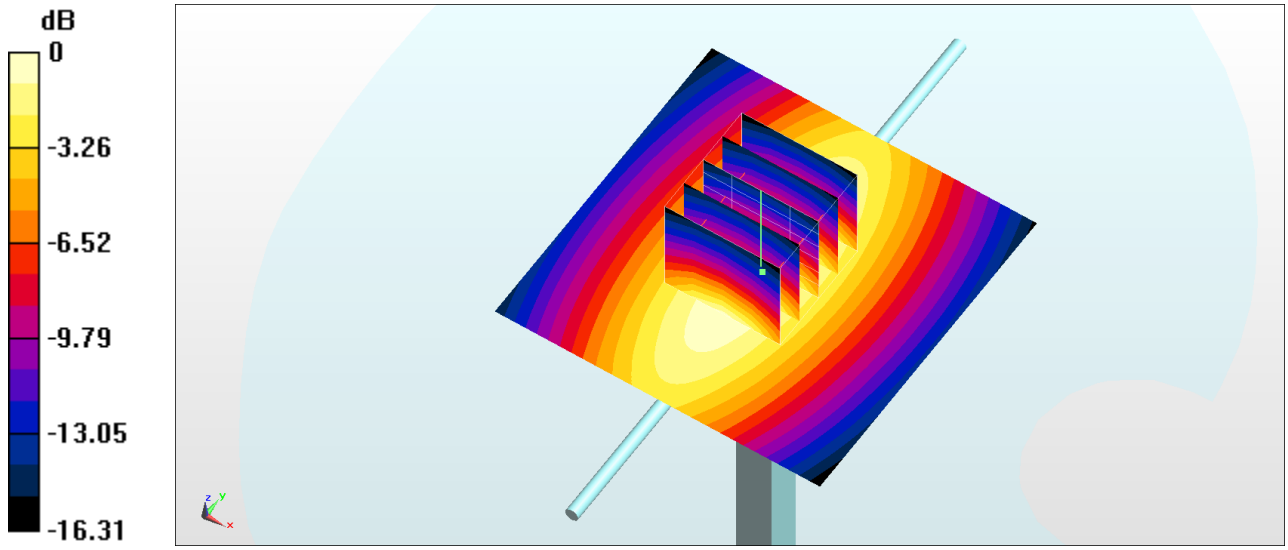

0 dB = 3.20 W/kg = 5.05 dBW/kg

System Check_Body_835MHz

DUT: D835V2-4d167

Communication System: CW; Frequency: 835 MHz;Duty Cycle: 1:1
Medium: MSL_850_180519 Medium parameters used: f = 835 MHz; σ = 0.959 S/m; ε_r = 55.498; ρ = 1000 kg/m^3
Ambient Temperature：23.8 ℃; Liquid Temperature：22.8 ℃

DASY5 Configuration:
- Probe: ES3DV3 - SN3270; ConvF(6.09, 6.09, 6.09); Calibrated: 2017/9/25;
- Sensor-Surface: 3mm (Mechanical Surface Detection)
- Electronics: DAE4 Sn853; Calibrated: 2017/7/19
- Phantom: SAM_Right; Type: SAM; Serial: TP:1479
- Measurement SW: DASY52, Version 52.10 (0);SEMCAD X Version 14.6.10 (7417)

Pin=250mW/Area Scan (61x61x1): Interpolated grid: dx=1.500 mm, dy=1.500 mm
Maximum value of SAR (interpolated) = 2.84 W/kg

Pin=250mW/Zoom Scan (5x5x7)/Cube 0: Measurement grid: dx=8mm, dy=8mm, dz=5mm
Reference Value = 55.38 V/m; Power Drift = -0.11 dB
Peak SAR (extrapolated) = 3.59 W/kg
SAR(1 g) = 2.47 W/kg; SAR(10 g) = 1.64 W/kg
Maximum value of SAR (measured) = 2.88 W/kg

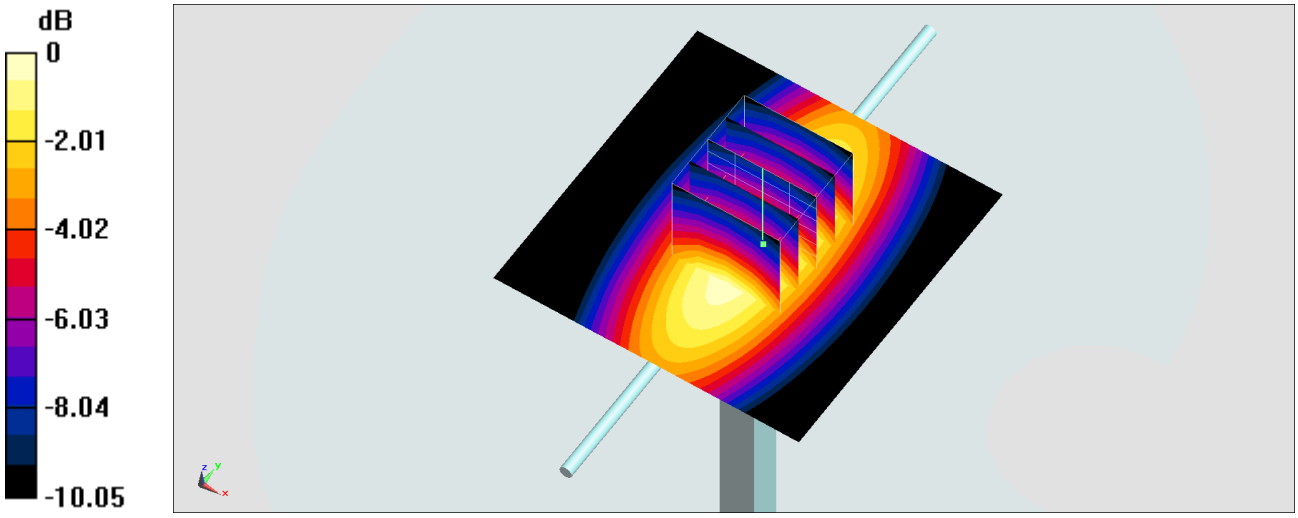

0 dB = 2.88 W/kg = 4.59 dBW/kg

System Check_Body_835MHz

DUT: D835V2-4d167

Communication System: CW; Frequency: 835 MHz;Duty Cycle: 1:1
Medium: MSL_850_180521 Medium parameters used: f = 835 MHz; σ = 0.955 S/m; ε_r = 54.63; ρ = 1000 kg/m^3
Ambient Temperature：23.5 ℃; Liquid Temperature：22.5 ℃

DASY5 Configuration:
- Probe: ES3DV3 - SN3270; ConvF(6.09, 6.09, 6.09); Calibrated: 2017/9/25;
- Sensor-Surface: 3mm (Mechanical Surface Detection)
- Electronics: DAE4 Sn853; Calibrated: 2017/7/19
- Phantom: SAM_Left; Type: QD000P40CD; Serial: TP:1477
- Measurement SW: DASY52, Version 52.10 (0);SEMCAD X Version 14.6.10 (7417)

Pin=250mW/Area Scan (61x61x1): Interpolated grid: dx=1.500 mm, dy=1.500 mm
Maximum value of SAR (interpolated) = 3.33 W/kg

Pin=250mW/Zoom Scan (5x5x7)/Cube 0: Measurement grid: dx=8mm, dy=8mm, dz=5mm
Reference Value = 62.53 V/m; Power Drift = -0.03 dB
Peak SAR (extrapolated) = 4.16 W/kg
SAR(1 g) = 2.57 W/kg; SAR(10 g) = 1.68 W/kg
Maximum value of SAR (measured) = 3.34 W/kg

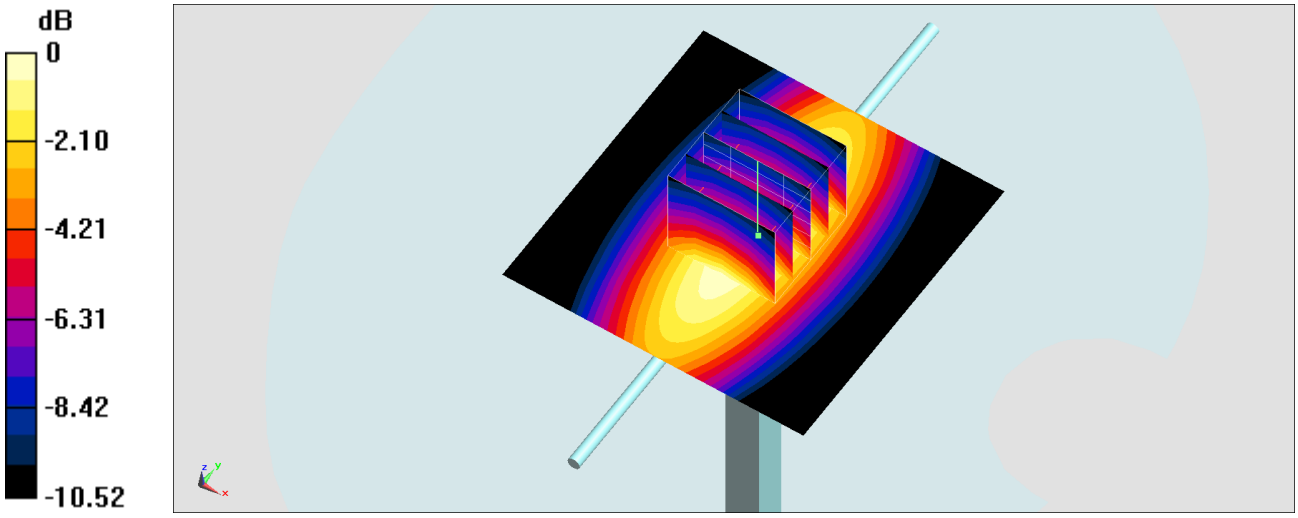

0 dB = 3.34 W/kg = 5.24 dBW/kg

System Check_Head_1750MHz

DUT: D1750V2-1068

Communication System: CW; Frequency: 1750 MHz;Duty Cycle: 1:1
Medium: HSL1750_180514 Medium parameters used: f = 1750 MHz; σ = 1.347 S/m; ε_r = 39.067; ρ = 1000 kg/m^3
Ambient Temperature：23.4 ℃; Liquid Temperature：22.4 ℃

DASY5 Configuration:
- Probe: EX3DV4 - SN3925; ConvF(9, 9, 9); Calibrated: 2017/5/24
- Sensor-Surface: 1.4mm (Mechanical Surface Detection)
- Electronics: DAE4 Sn1424; Calibrated: 2018/1/18
- Phantom: SAM_Right; Type: QD000P40CD; Serial: 1884
- Measurement SW: DASY52, Version 52.10 (1);SEMCAD X Version 14.6.11 (7437)

Pin=250mW/Area Scan (61x61x1): Interpolated grid: dx=1.500 mm, dy=1.500 mm
Maximum value of SAR (interpolated) = 12.5 W/kg

Pin=250mW/Zoom Scan (5x5x7)/Cube 0: Measurement grid: dx=8mm, dy=8mm, dz=5mm
Reference Value = 95.92 V/m; Power Drift = -0.01 dB
Peak SAR (extrapolated) = 15.8 W/kg
SAR(1 g) = 8.95 W/kg; SAR(10 g) = 4.81 W/kg
Maximum value of SAR (measured) = 12.5 W/kg

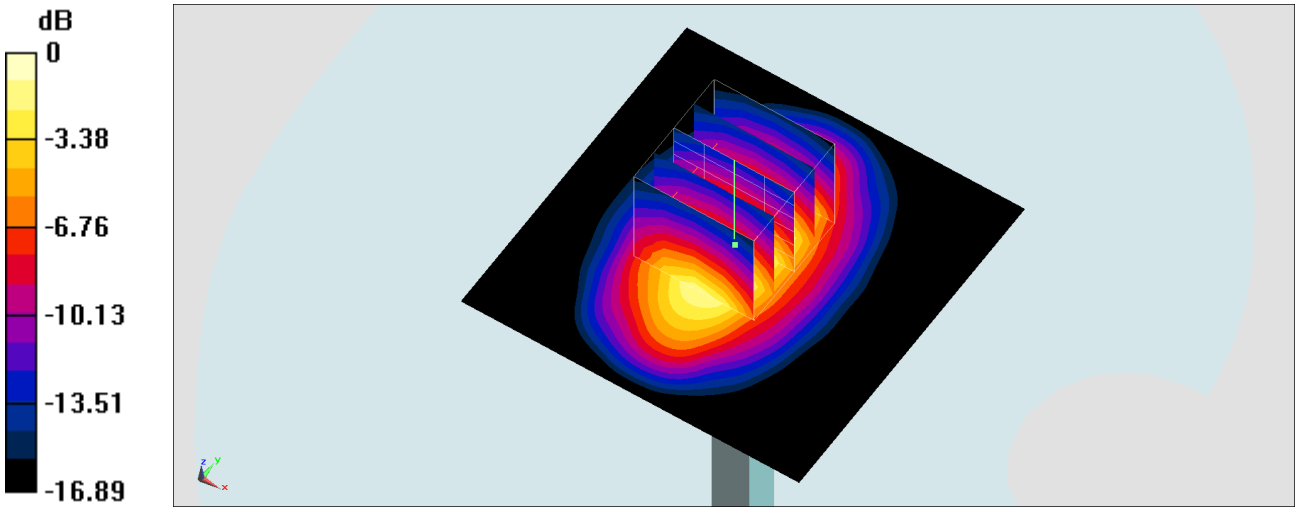

0 dB = 12.5 W/kg = 10.97 dBW/kg

System Check_Head_1750MHz

DUT: D1750V2-1068

Communication System: CW; Frequency: 1750 MHz;Duty Cycle: 1:1
Medium: HSL_1750_180521 Medium parameters used: f = 1750 MHz; σ = 1.371 S/m; ε_r = 40.103; ρ = 1000 kg/m^3
Ambient Temperature：23.7 ℃; Liquid Temperature：22.7 ℃

DASY5 Configuration:
- Probe: EX3DV4 - SN3554; ConvF(7.42, 7.42, 7.42); Calibrated: 2017/9/29;
- Sensor-Surface: 1.4mm (Mechanical Surface Detection)
- Electronics: DAE4 Sn1424; Calibrated: 2018/1/18
- Phantom: SAM_RIGHT; Type: QD000P40CD; Serial: 1719
- Measurement SW: DASY52, Version 52.10 (0);SEMCAD X Version 14.6.10 (7417)

Pin=250mW/Area Scan (61x61x1): Interpolated grid: dx=1.500 mm, dy=1.500 mm
Maximum value of SAR (interpolated) = 14.9 W/kg

Pin=250mW/Zoom Scan (5x5x7)/Cube 0: Measurement grid: dx=8mm, dy=8mm, dz=5mm
Reference Value = 90.11 V/m; Power Drift = 0.13 dB
Peak SAR (extrapolated) = 18.5 W/kg
SAR(1 g) = 9.55 W/kg; SAR(10 g) = 4.8 W/kg
Maximum value of SAR (measured) = 15.0 W/kg

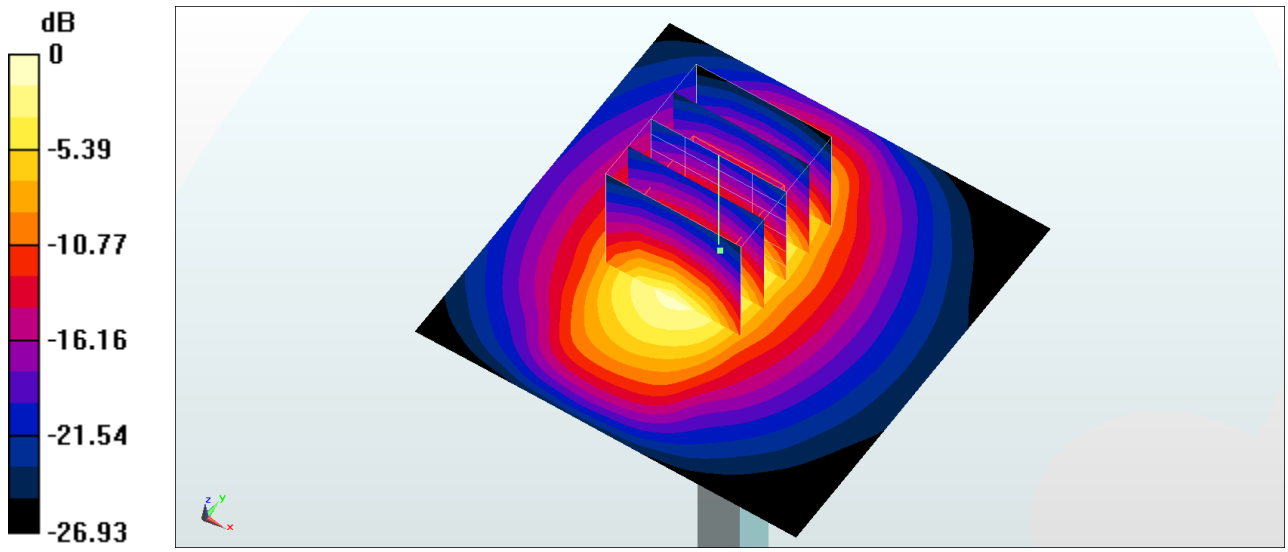

0 dB = 14.9 W/kg = 11.73 dBW/kg

System Check_Head_1750MHz

DUT: D1750V2-1068

Communication System: CW; Frequency: 1750 MHz;Duty Cycle: 1:1
Medium: HSL_1750_180521 Medium parameters used: f = 1750 MHz; σ = 1.371 S/m; ε_r = 40.103; ρ = 1000 kg/m^3
Ambient Temperature：23.7 ℃; Liquid Temperature：22.7 ℃

DASY5 Configuration:
- Probe: ES3DV3 - SN3270; ConvF(5.24, 5.24, 5.24); Calibrated: 2017/9/25;
- Sensor-Surface: 3mm (Mechanical Surface Detection)
- Electronics: DAE4 Sn853; Calibrated: 2017/7/19
- Phantom: SAM_Left; Type: QD000P40CD; Serial: TP:1477
- Measurement SW: DASY52, Version 52.10 (0);SEMCAD X Version 14.6.10 (7417)

Pin=250mW/Area Scan (61x61x1): Interpolated grid: dx=1.500 mm, dy=1.500 mm
Maximum value of SAR (interpolated) = 11.6 W/kg

Pin=250mW/Zoom Scan (5x5x7)/Cube 0: Measurement grid: dx=8mm, dy=8mm, dz=5mm
Reference Value = 92.51 V/m; Power Drift = -0.03 dB
Peak SAR (extrapolated) = 15.4 W/kg
SAR(1 g) = 8.84 W/kg; SAR(10 g) = 4.8 W/kg
Maximum value of SAR (measured) = 11.0 W/kg

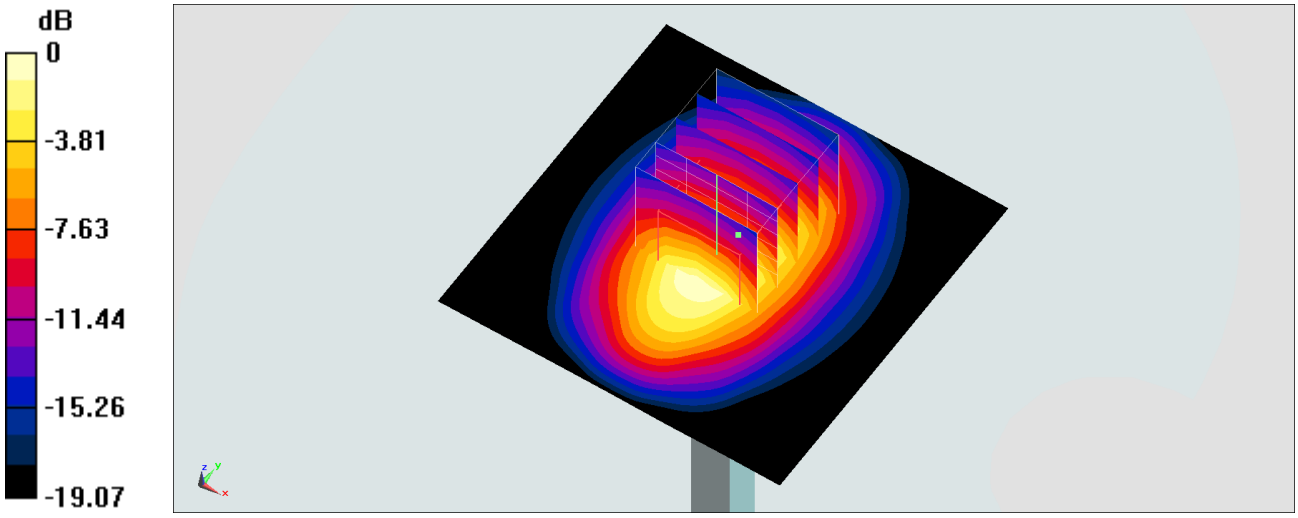

0 dB = 11.0 W/kg = 10.41 dBW/kg

System Check_Body_1750MHz

DUT: D1750V2-1068

Communication System: CW; Frequency: 1750 MHz;Duty Cycle: 1:1
Medium: MSL_1750_180517 Medium parameters used: f = 1750 MHz; σ = 1.496 S/m; ε_r = 55.28; ρ = 1000 kg/m^3
Ambient Temperature：23.4 ℃; Liquid Temperature：22.4 ℃

DASY5 Configuration:
- Probe: ES3DV3 - SN3270; ConvF(5, 5, 5); Calibrated: 2017/9/25;
- Sensor-Surface: 3mm (Mechanical Surface Detection)
- Electronics: DAE4 Sn853; Calibrated: 2017/7/19
- Phantom: SAM_Left; Type: QD000P40CD; Serial: TP:1477
- Measurement SW: DASY52, Version 52.10 (0);SEMCAD X Version 14.6.10 (7417)

Pin=250mW/Area Scan (61x61x1): Interpolated grid: dx=1.500 mm, dy=1.500 mm
Maximum value of SAR (interpolated) = 12.4 W/kg

Pin=250mW/Zoom Scan (5x5x7)/Cube 0: Measurement grid: dx=8mm, dy=8mm, dz=5mm
Reference Value = 98.61 V/m; Power Drift = -0.14 dB
Peak SAR (extrapolated) = 15.9 W/kg
SAR(1 g) = 8.69 W/kg; SAR(10 g) = 4.65 W/kg
Maximum value of SAR (measured) = 12.4 W/kg

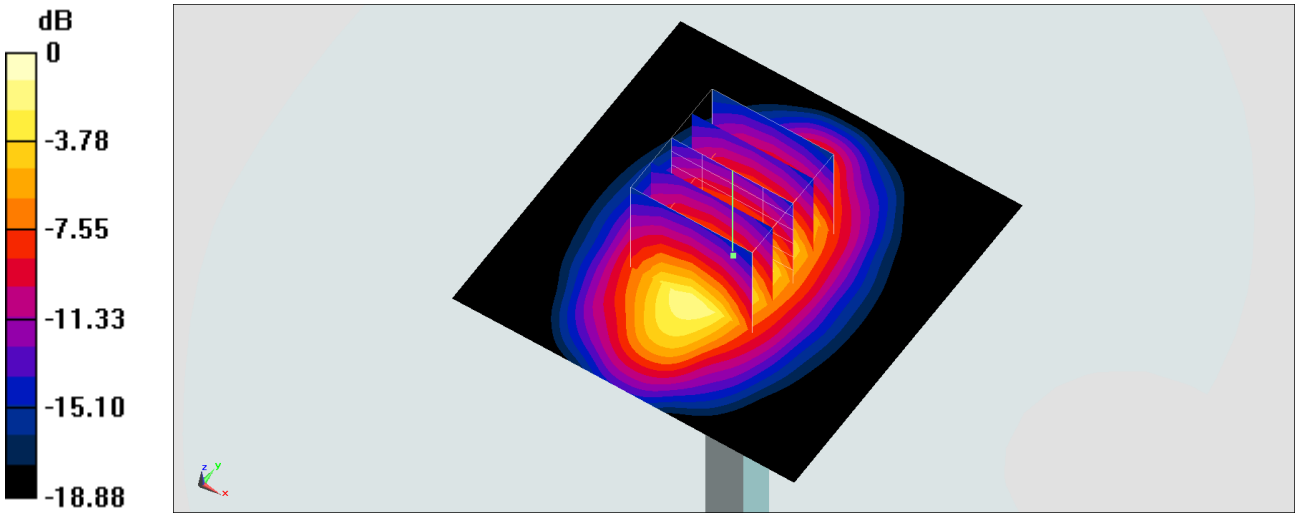

0 dB = 12.4 W/kg = 10.93 dBW/kg

System Check_Body_1750MHz

DUT: D1750V2-1068

Communication System: CW; Frequency: 1750 MHz;Duty Cycle: 1:1
Medium: MSL_1750_180519 Medium parameters used: f = 1750 MHz; σ = 1.472 S/m; ε_r = 54.12; ρ = 1000 kg/m^3
Ambient Temperature：23.4 ℃; Liquid Temperature：22.4 ℃

DASY5 Configuration:
- Probe: ES3DV3 - SN3270; ConvF(5, 5, 5); Calibrated: 2017/9/25;
- Sensor-Surface: 3mm (Mechanical Surface Detection)
- Electronics: DAE4 Sn853; Calibrated: 2017/7/19
- Phantom: SAM_Left; Type: QD000P40CD; Serial: TP:1477
- Measurement SW: DASY52, Version 52.10 (0);SEMCAD X Version 14.6.10 (7417)

Pin=250mW/Area Scan (61x61x1): Interpolated grid: dx=1.500 mm, dy=1.500 mm
Maximum value of SAR (interpolated) = 12.4 W/kg

Pin=250mW/Zoom Scan (5x5x7)/Cube 0: Measurement grid: dx=8mm, dy=8mm, dz=5mm
Reference Value = 90.11 V/m; Power Drift = 0.08 dB
Peak SAR (extrapolated) = 16.1 W/kg
SAR(1 g) = 9.42 W/kg; SAR(10 g) = 5.16 W/kg
Maximum value of SAR (measured) = 11.4 W/kg

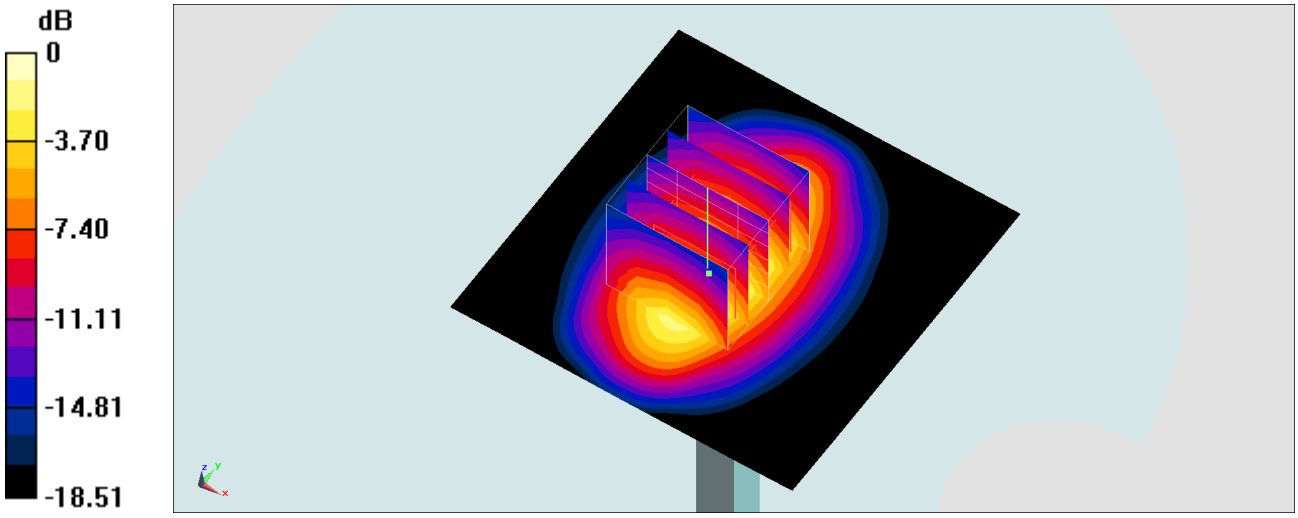

0 dB = 11.4 W/kg = 10.57 dBW/kg

System Check_Head_1900MHz

DUT: D1900V2-5d041

Communication System: CW; Frequency: 1900 MHz;Duty Cycle: 1:1
Medium: HSL_1900_180514 Medium parameters used: f = 1900 MHz; σ = 1.458 S/m; ε_r = 38.867; ρ = 1000 kg/m^3
Ambient Temperature：23.4 ℃; Liquid Temperature：22.4 ℃

DASY5 Configuration:
- Probe: EX3DV4 - SN3925; ConvF(8.73, 8.73, 8.73); Calibrated: 2017/5/24
- Sensor-Surface: 1.4mm (Mechanical Surface Detection)
- Electronics: DAE4 Sn1424; Calibrated: 2018/1/18
- Phantom: SAM_Right; Type: QD000P40CD; Serial: 1884
- Measurement SW: DASY52, Version 52.10 (1);SEMCAD X Version 14.6.11 (7437)

Pin=250mW/Area Scan (61x61x1): Interpolated grid: dx=1.500 mm, dy=1.500 mm
Maximum value of SAR (interpolated) = 16.4 W/kg

Pin=250mW/Zoom Scan (5x5x7)/Cube 0: Measurement grid: dx=8mm, dy=8mm, dz=5mm
Reference Value = 105.9 V/m; Power Drift = -0.06 dB
Peak SAR (extrapolated) = 18.4 W/kg
SAR(1 g) = 9.75 W/kg; SAR(10 g) = 5.01 W/kg
Maximum value of SAR (measured) = 15.3 W/kg

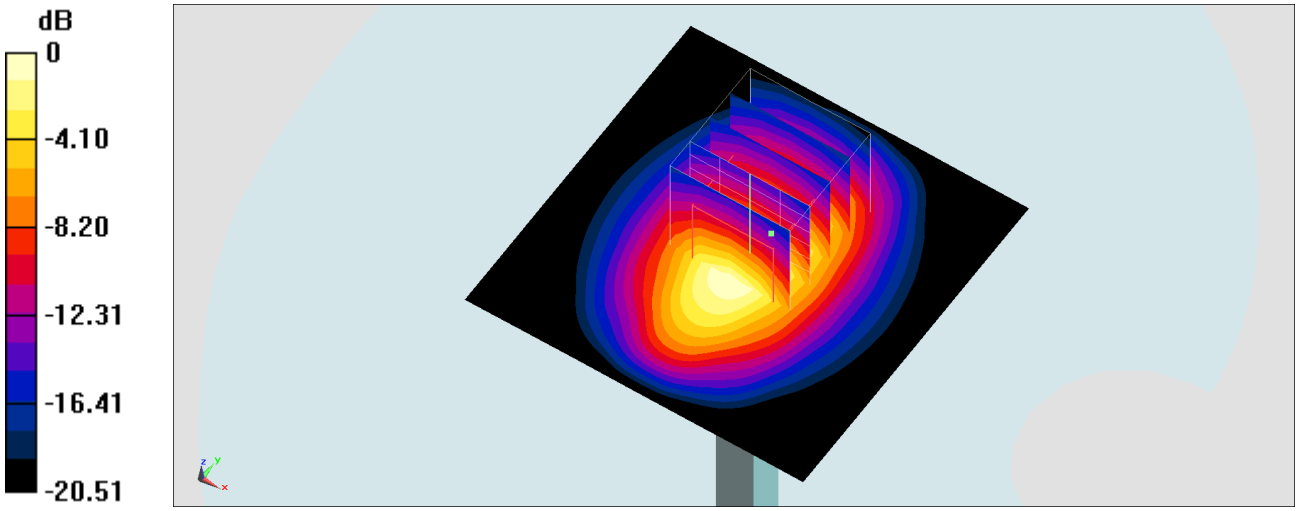

0 dB = 15.3 W/kg = 11.85 dBW/kg

System Check_Head_1900MHz

DUT: D1900V2-5d041

Communication System: CW; Frequency: 1900 MHz;Duty Cycle: 1:1
Medium: HSL_1900_180515 Medium parameters used: f = 1900 MHz; σ = 1.43 S/m; ε_r = 40.283; ρ = 1000 kg/m^3
Ambient Temperature：23.3 ℃; Liquid Temperature：22.3 ℃

DASY5 Configuration:
- Probe: ES3DV3 - SN3270; ConvF(5.2, 5.2, 5.2); Calibrated: 2017/9/25;
- Sensor-Surface: 3mm (Mechanical Surface Detection)
- Electronics: DAE4 Sn853; Calibrated: 2017/7/19
- Phantom: SAM_Left; Type: QD000P40CD; Serial: TP:1477
- Measurement SW: DASY52, Version 52.10 (0);SEMCAD X Version 14.6.10 (7417)

Pin=250mW/Area Scan (61x61x1): Interpolated grid: dx=1.500 mm, dy=1.500 mm
Maximum value of SAR (interpolated) = 12.6 W/kg

Pin=250mW/Zoom Scan (5x5x7)/Cube 0: Measurement grid: dx=8mm, dy=8mm, dz=5mm
Reference Value = 95.19 V/m; Power Drift = 0.04 dB
Peak SAR (extrapolated) = 17.9 W/kg
SAR(1 g) = 9.82 W/kg; SAR(10 g) = 5.13 W/kg
Maximum value of SAR (measured) = 12.1 W/kg

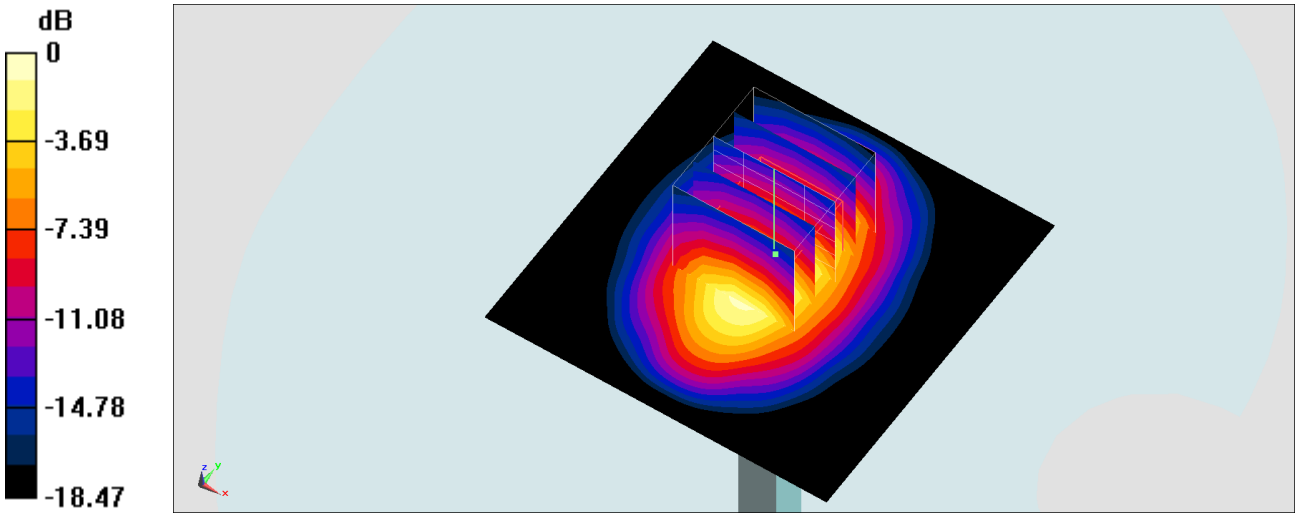

0 dB = 12.1 W/kg = 10.83 dBW/kg

System Check_Head_1900MHz

DUT: D1900V2-5d041

Communication System: CW; Frequency: 1900 MHz;Duty Cycle: 1:1
Medium: HSL_1900_180521 Medium parameters used: f = 1900 MHz; σ = 1.453 S/m; ε_r = 39.883; ρ = 1000 kg/m^3
Ambient Temperature：23.7 ℃; Liquid Temperature：22.7 ℃

DASY5 Configuration:
- Probe: EX3DV4 - SN3554; ConvF(7.1, 7.1, 7.1); Calibrated: 2017/9/29;
- Sensor-Surface: 1.4mm (Mechanical Surface Detection)
- Electronics: DAE4 Sn1424; Calibrated: 2018/1/18
- Phantom: SAM_RIGHT; Type: QD000P40CD; Serial: 1719
- Measurement SW: DASY52, Version 52.10 (0);SEMCAD X Version 14.6.10 (7417)

Pin=250mW/Area Scan (61x61x1): Interpolated grid: dx=1.500 mm, dy=1.500 mm
Maximum value of SAR (interpolated) = 14.8 W/kg

Pin=250mW/Zoom Scan (5x5x7)/Cube 0: Measurement grid: dx=8mm, dy=8mm, dz=5mm
Reference Value = 90.64 V/m; Power Drift = 0.11 dB
Peak SAR (extrapolated) = 17.8 W/kg
SAR(1 g) = 9.47 W/kg; SAR(10 g) = 4.87 W/kg
Maximum value of SAR (measured) = 14.6 W/kg

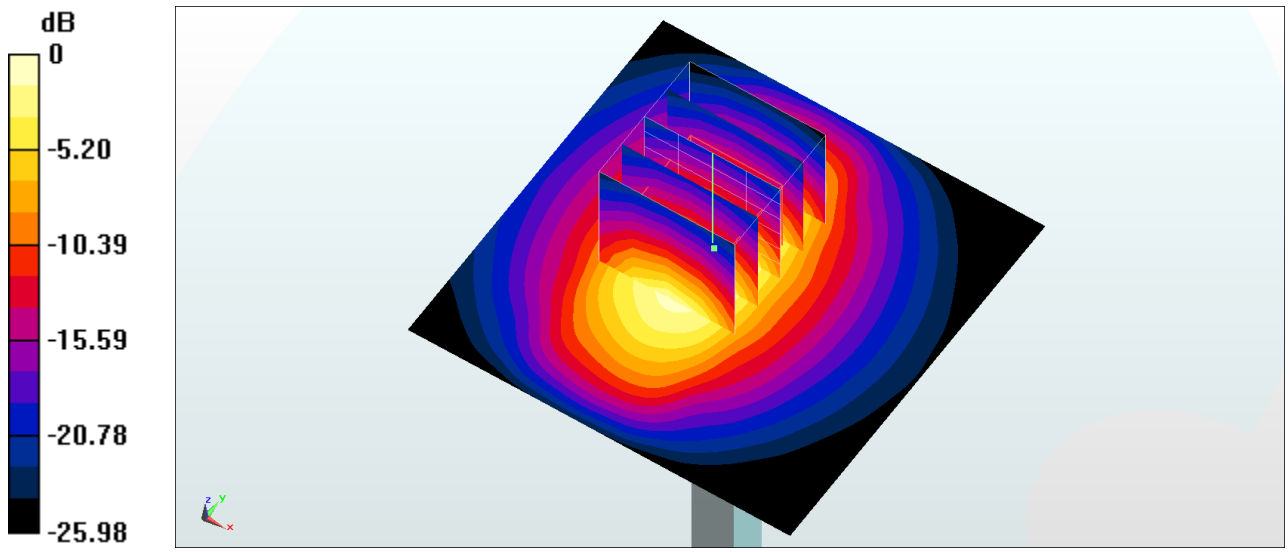

0 dB = 14.8 W/kg = 11.70 dBW/kg

System Check_Head_1900MHz

DUT: D1900V2-5d041

Communication System: CW; Frequency: 1900 MHz;Duty Cycle: 1:1
Medium: HSL_1900_180521 Medium parameters used: f = 1900 MHz; σ = 1.453 S/m; ε_r = 39.883; ρ = 1000 kg/m^3
Ambient Temperature：23.7 ℃; Liquid Temperature：22.7 ℃

DASY5 Configuration:
- Probe: ES3DV3 - SN3270; ConvF(5.2, 5.2, 5.2); Calibrated: 2017/9/25;
- Sensor-Surface: 3mm (Mechanical Surface Detection)
- Electronics: DAE4 Sn853; Calibrated: 2017/7/19
- Phantom: SAM_Left; Type: QD000P40CD; Serial: TP:1477
- Measurement SW: DASY52, Version 52.10 (0);SEMCAD X Version 14.6.10 (7417)

Pin=250mW/Area Scan (61x61x1): Interpolated grid: dx=1.500 mm, dy=1.500 mm
Maximum value of SAR (interpolated) = 14.7 W/kg

Pin=250mW/Zoom Scan (5x5x7)/Cube 0: Measurement grid: dx=8mm, dy=8mm, dz=5mm
Reference Value = 107.3 V/m; Power Drift = -0.07 dB
Peak SAR (extrapolated) = 18.9 W/kg
SAR(1 g) = 9.88 W/kg; SAR(10 g) = 5.06 W/kg
Maximum value of SAR (measured) = 14.2 W/kg

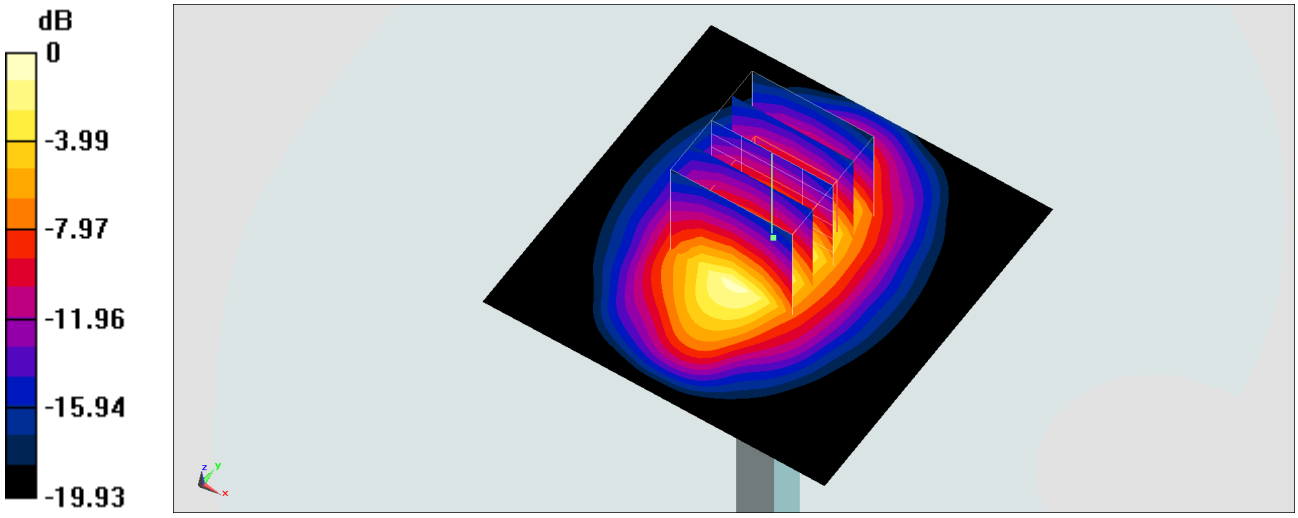

0 dB = 14.2 W/kg = 11.52 dBW/kg

System Check_Body_1900MHz

DUT: D1900V2-5d041

Communication System: CW; Frequency: 1900 MHz;Duty Cycle: 1:1
Medium: MSL_1900_180516 Medium parameters used: f = 1900 MHz; σ = 1.555 S/m; ε_r = 54.256; ρ = 1000 kg/m^3
Ambient Temperature：23.4 ℃; Liquid Temperature：22.4 ℃

DASY5 Configuration:
- Probe: ES3DV3 - SN3270; ConvF(4.9, 4.9, 4.9); Calibrated: 2017/9/25;
- Sensor-Surface: 3mm (Mechanical Surface Detection)
- Electronics: DAE4 Sn853; Calibrated: 2017/7/19
- Phantom: SAM_Left; Type: QD000P40CD; Serial: TP:1477
- Measurement SW: DASY52, Version 52.10 (0);SEMCAD X Version 14.6.10 (7417)

Pin=250mW/Area Scan (61x61x1): Interpolated grid: dx=1.500 mm, dy=1.500 mm
Maximum value of SAR (interpolated) = 12.7 W/kg

Pin=250mW/Zoom Scan (5x5x7)/Cube 0: Measurement grid: dx=8mm, dy=8mm, dz=5mm
Reference Value = 92.37 V/m; Power Drift = -0.12 dB
Peak SAR (extrapolated) = 17.4 W/kg
SAR(1 g) = 9.57 W/kg; SAR(10 g) = 5 W/kg
Maximum value of SAR (measured) = 12.1 W/kg

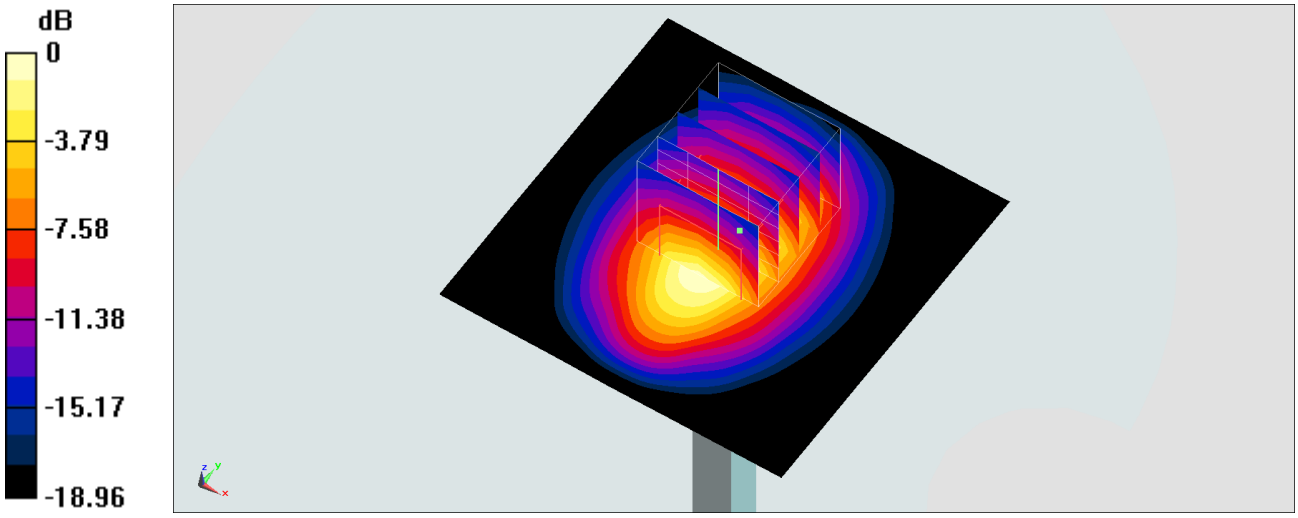

0 dB = 12.1 W/kg = 10.83 dBW/kg

System Check_Body_1900MHz

DUT: D1900V2-5d041

Communication System: CW; Frequency: 1900 MHz;Duty Cycle: 1:1
Medium: MSL_1900_180518 Medium parameters used: f = 1900 MHz; σ = 1.554 S/m; ε_r = 51.75; ρ = 1000 kg/m^3
Ambient Temperature：23.4 ℃; Liquid Temperature：22.4 ℃

DASY5 Configuration:
- Probe: ES3DV3 - SN3270; ConvF(4.9, 4.9, 4.9); Calibrated: 2017/9/25;
- Sensor-Surface: 3mm (Mechanical Surface Detection)
- Electronics: DAE4 Sn853; Calibrated: 2017/7/19
- Phantom: SAM_Left; Type: QD000P40CD; Serial: TP:1477
- Measurement SW: DASY52, Version 52.10 (0);SEMCAD X Version 14.6.10 (7417)

Pin=250mW/Area Scan (61x61x1): Interpolated grid: dx=1.500 mm, dy=1.500 mm
Maximum value of SAR (interpolated) = 12.7 W/kg

Pin=250mW/Zoom Scan (5x5x7)/Cube 0: Measurement grid: dx=8mm, dy=8mm, dz=5mm
Reference Value = 90.56 V/m; Power Drift = 0.01 dB
Peak SAR (extrapolated) = 17.3 W/kg
SAR(1 g) = 9.62 W/kg; SAR(10 g) = 5.08 W/kg
Maximum value of SAR (measured) = 12.0 W/kg

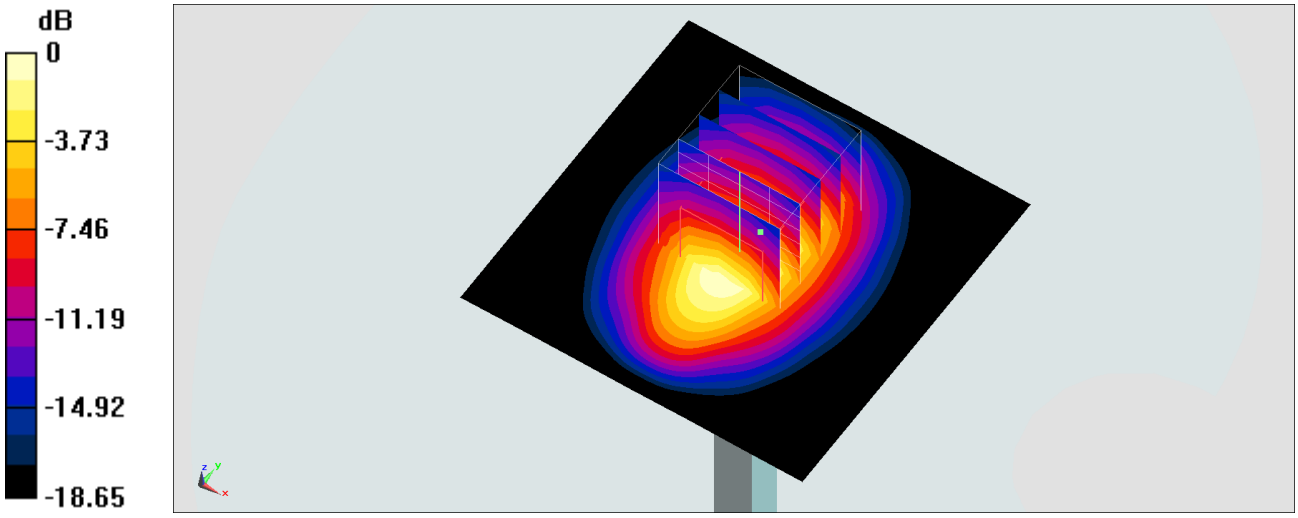

0 dB = 12.0 W/kg = 10.79 dBW/kg

System Check_Head_2450MHz

DUT: D2450V2-736

Communication System: CW; Frequency: 2450 MHz;Duty Cycle: 1:1
Medium: HSL_2450_180522 Medium parameters used: f = 2450 MHz; σ = 1.845 S/m; ε_r = 38.68; ρ = 1000 kg/m^3
Ambient Temperature：23.2 ℃; Liquid Temperature：22.2 ℃

DASY5 Configuration:
- Probe: ES3DV3 - SN3270; ConvF(4.75, 4.75, 4.75); Calibrated: 2017/9/25;
- Sensor-Surface: 3mm (Mechanical Surface Detection)
- Electronics: DAE4 Sn853; Calibrated: 2017/7/19
- Phantom: SAM_Right; Type: SAM; Serial: TP:1479
- Measurement SW: DASY52, Version 52.10 (0);SEMCAD X Version 14.6.10 (7417)

Pin=250mW/Area Scan (61x61x1): Interpolated grid: dx=1.200 mm, dy=1.200 mm
Maximum value of SAR (interpolated) = 18.2 W/kg

Pin=250mW/Zoom Scan (7x7x7)/Cube 0: Measurement grid: dx=5mm, dy=5mm, dz=5mm
Reference Value = 101.8 V/m; Power Drift = -0.06 dB
Peak SAR (extrapolated) = 27.8 W/kg
SAR(1 g) = 13.2 W/kg; SAR(10 g) = 6.06 W/kg
Maximum value of SAR (measured) = 17.1 W/kg

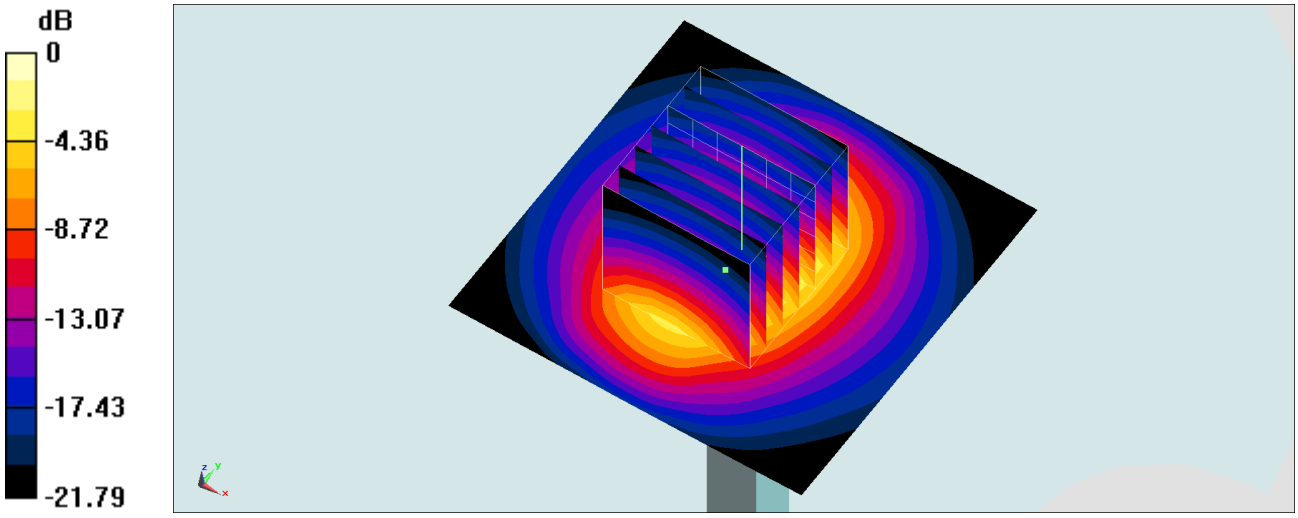

0 dB = 17.1 W/kg = 12.33 dBW/kg

System Check_Head_2450MHz

DUT: D2450V2-736

Communication System: CW; Frequency: 2450 MHz;Duty Cycle: 1:1
Medium: HSL_2450_180525 Medium parameters used: f = 2450 MHz; σ = 1.81 S/m; ε_r = 39.662; ρ = 1000 kg/m^3
Ambient Temperature：23.1 ℃; Liquid Temperature：22.1 ℃

DASY5 Configuration:
- Probe: ES3DV3 - SN3270; ConvF(4.75, 4.75, 4.75); Calibrated: 2017/9/25
- Sensor-Surface: 3mm (Mechanical Surface Detection)
- Electronics: DAE4 Sn853; Calibrated: 2017/7/19
- Phantom: SAM_Left; Type: QD000P40CD; Serial: TP:1477
- Measurement SW: DASY52, Version 52.10 (1);SEMCAD X Version 14.6.11 (7439)

Pin=250mW/Area Scan (61x61x1): Interpolated grid: dx=1.200 mm, dy=1.200 mm
Maximum value of SAR (interpolated) = 17.8 W/kg

Pin=250mW/Zoom Scan (7x7x7)/Cube 0: Measurement grid: dx=5mm, dy=5mm, dz=5mm
Reference Value = 101.8 V/m; Power Drift = -0.06 dB
Peak SAR (extrapolated) = 27.3 W/kg
SAR(1 g) = 12.9 W/kg; SAR(10 g) = 5.94 W/kg
Maximum value of SAR (measured) = 16.8 W/kg

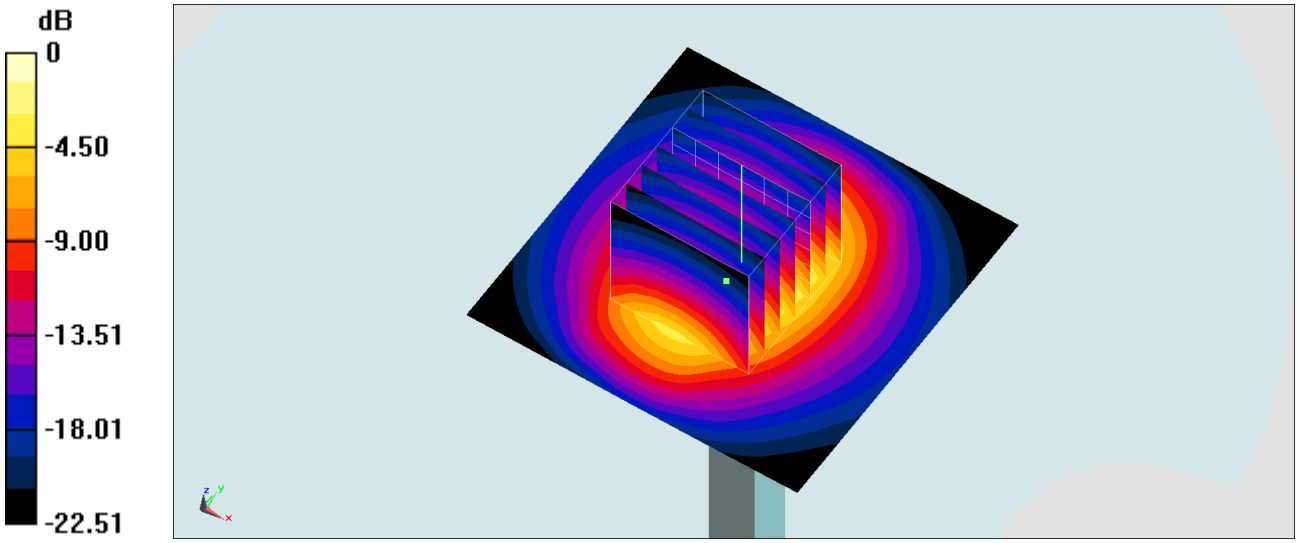

0 dB = 16.8 W/kg = 12.25 dBW/kg

System Check_Head_2600MHz

DUT: D2600V2-1008

Communication System: CW; Frequency: 2600 MHz;Duty Cycle: 1:1
Medium: HSL_2600_180516 Medium parameters used: f = 2600 MHz; σ = 1.977 S/m; ε_r = 38.819; ρ = 1000 kg/m^3
Ambient Temperature：23.6 ℃; Liquid Temperature：22.6 ℃

DASY5 Configuration:
- Probe: EX3DV4 - SN7346; ConvF(7.35, 7.35, 7.35); Calibrated: 2018/2/28;
- Sensor-Surface: 1.4mm (Mechanical Surface Detection)
- Electronics: DAE3 Sn360; Calibrated: 2017/11/2
- Phantom: SAM LEFT; Type: QD000P40CD; Serial: TP:1718
- Measurement SW: DASY52, Version 52.10 (0);SEMCAD X Version 14.6.10 (7417)

Pin=250mW/Area Scan (61x61x1): Interpolated grid: dx=1.200 mm, dy=1.200 mm
Maximum value of SAR (interpolated) = 27.6 W/kg

Pin=250mW/Zoom Scan (7x7x7)/Cube 0: Measurement grid: dx=5mm, dy=5mm, dz=5mm
Reference Value = 128.5 V/m; Power Drift = -0.13 dB
Peak SAR (extrapolated) = 33.4 W/kg
SAR(1 g) = 15.3 W/kg; SAR(10 g) = 6.87 W/kg
Maximum value of SAR (measured) = 26.4 W/kg

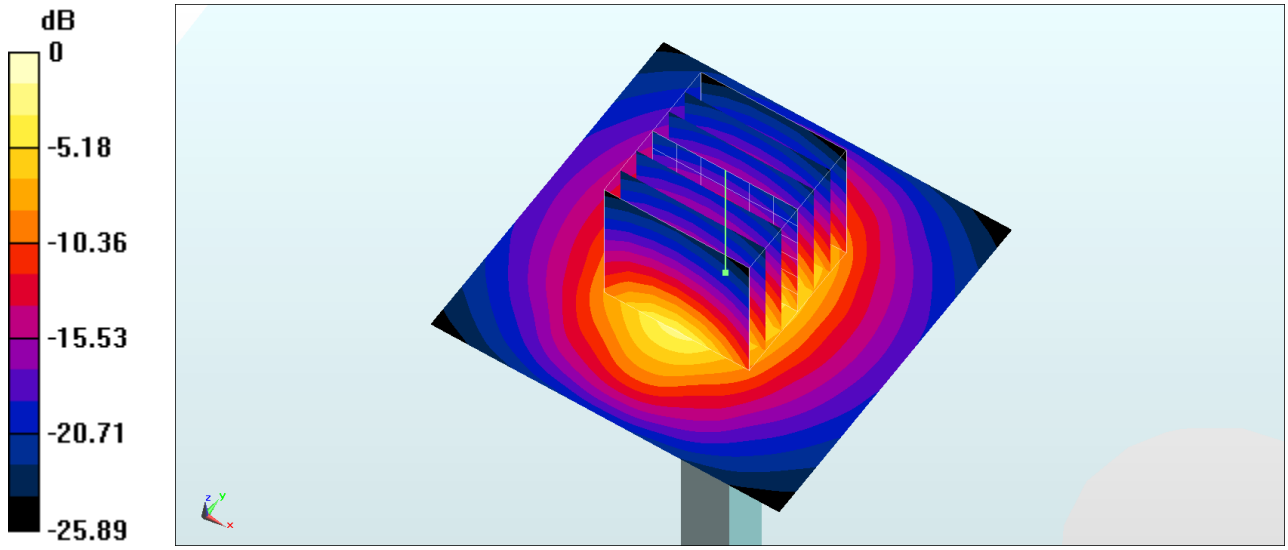

0 dB = 27.6 W/kg = 14.41 dBW/kg

System Check_Head_2600MHz

DUT: D2600V2-1008

Communication System: CW; Frequency: 2600 MHz;Duty Cycle: 1:1
Medium: HSL_2600_180519 Medium parameters used: f = 2600 MHz; σ = 1.989 S/m; ε_r = 39.047; ρ = 1000 kg/m^3
Ambient Temperature：23.7 ℃; Liquid Temperature：22.7 ℃

DASY5 Configuration:
- Probe: EX3DV4 - SN3554; ConvF(6.24, 6.24, 6.24); Calibrated: 2017/9/29;
- Sensor-Surface: 1.4mm (Mechanical Surface Detection)
- Electronics: DAE4 Sn1424; Calibrated: 2018/1/18
- Phantom: SAM LEFT; Type: QD000P40CD; Serial: TP:1718
- Measurement SW: DASY52, Version 52.10 (0);SEMCAD X Version 14.6.10 (7417)

Pin=250mW/Area Scan (61x61x1): Interpolated grid: dx=1.200 mm, dy=1.200 mm
Maximum value of SAR (interpolated) = 24.1 W/kg

Pin=250mW/Zoom Scan (7x7x7)/Cube 0: Measurement grid: dx=5mm, dy=5mm, dz=5mm
Reference Value = 114.6 V/m; Power Drift = -0.13 dB
Peak SAR (extrapolated) = 30.7 W/kg
SAR(1 g) = 13.7 W/kg; SAR(10 g) = 6.02 W/kg
Maximum value of SAR (measured) = 24.2 W/kg

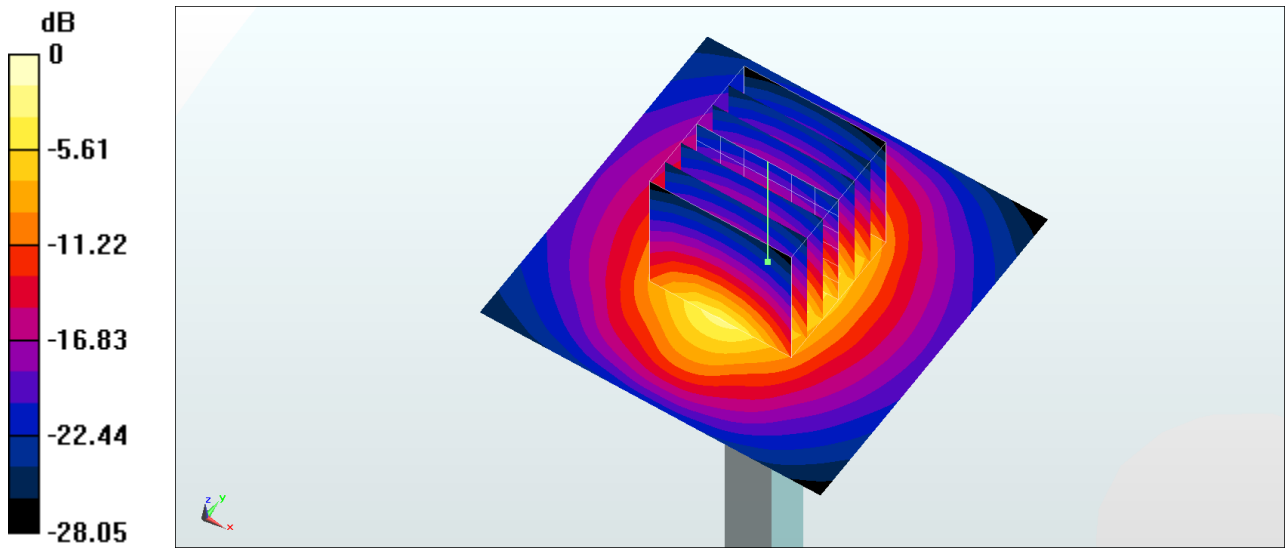

0 dB = 24.1 W/kg = 13.82 dBW/kg

System Check_Body_2600MHz

DUT: D2600V2-1008

Communication System: CW; Frequency: 2600 MHz;Duty Cycle: 1:1
Medium: MSL_2600_180517 Medium parameters used: f = 2600 MHz; σ = 2.23 S/m; ε_r = 53.903; ρ = 1000 kg/m^3
Ambient Temperature：23.2 ℃; Liquid Temperature：22.2 ℃

DASY5 Configuration:
- Probe: ES3DV3 - SN3270; ConvF(4.19, 4.19, 4.19); Calibrated: 2017/9/25;
- Sensor-Surface: 3mm (Mechanical Surface Detection)
- Electronics: DAE4 Sn853; Calibrated: 2017/7/19
- Phantom: SAM_Right; Type: SAM; Serial: TP:1479
- Measurement SW: DASY52, Version 52.10 (0);SEMCAD X Version 14.6.10 (7417)

Pin=250mW/Area Scan (71x71x1): Interpolated grid: dx=1.200 mm, dy=1.200 mm
Maximum value of SAR (interpolated) = 19.7 W/kg

Pin=250mW/Zoom Scan (7x7x7)/Cube 0: Measurement grid: dx=5mm, dy=5mm, dz=5mm
Reference Value = 95.29 V/m; Power Drift = -0.05 dB
Peak SAR (extrapolated) = 30.1 W/kg
SAR(1 g) = 14.2 W/kg; SAR(10 g) = 6.32 W/kg
Maximum value of SAR (measured) = 18.9 W/kg

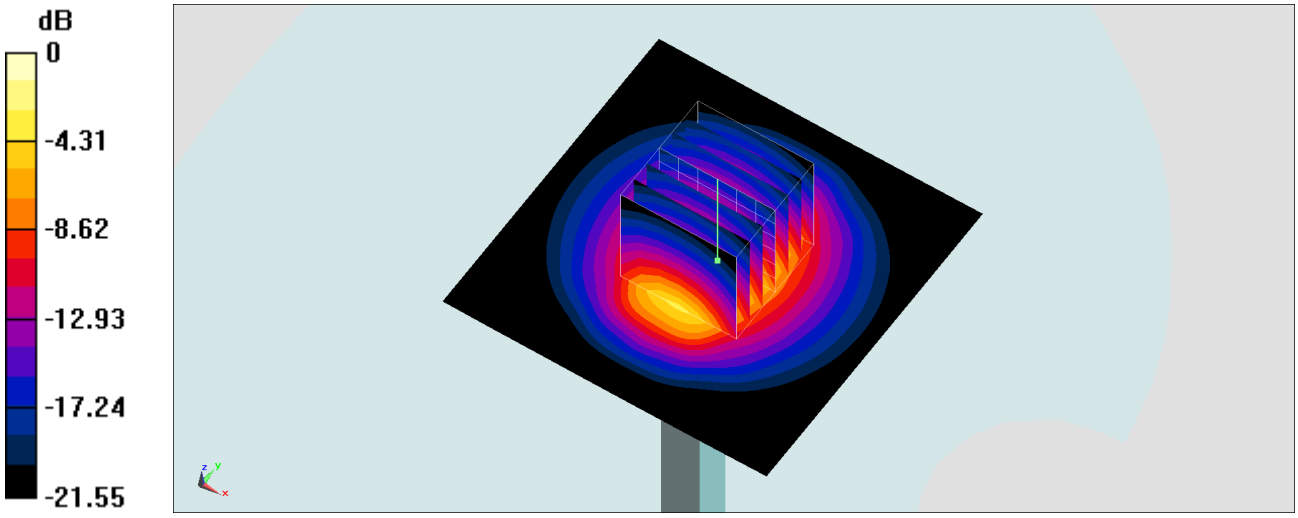

0 dB = 18.9 W/kg = 12.76 dBW/kg

System Check_Body_2600MHz

DUT: D2600V2-1008

Communication System: CW; Frequency: 2600 MHz;Duty Cycle: 1:1
Medium: MSL_2600_180520 Medium parameters used: f = 2600 MHz; σ = 2.188 S/m; ε_r = 51.383; ρ = 1000 kg/m^3
Ambient Temperature：23.5 ℃; Liquid Temperature：22.5 ℃

DASY5 Configuration:
- Probe: EX3DV4 - SN3554; ConvF(6.27, 6.27, 6.27); Calibrated: 2017/9/29;
- Sensor-Surface: 1.4mm (Mechanical Surface Detection)
- Electronics: DAE4 Sn1424; Calibrated: 2018/1/18
- Phantom: SAM LEFT; Type: QD000P40CD; Serial: TP:1718
- Measurement SW: DASY52, Version 52.10 (0);SEMCAD X Version 14.6.10 (7417)

Pin=250mW/Area Scan (71x71x1): Interpolated grid: dx=1.200 mm, dy=1.200 mm
Maximum value of SAR (interpolated) = 22.2 W/kg

Pin=250mW/Zoom Scan (7x7x7)/Cube 0: Measurement grid: dx=5mm, dy=5mm, dz=5mm
Reference Value = 100.9 V/m; Power Drift = -0.08 dB
Peak SAR (extrapolated) = 29.5 W/kg
SAR(1 g) = 14 W/kg; SAR(10 g) = 6.33 W/kg
Maximum value of SAR (measured) = 21.6 W/kg

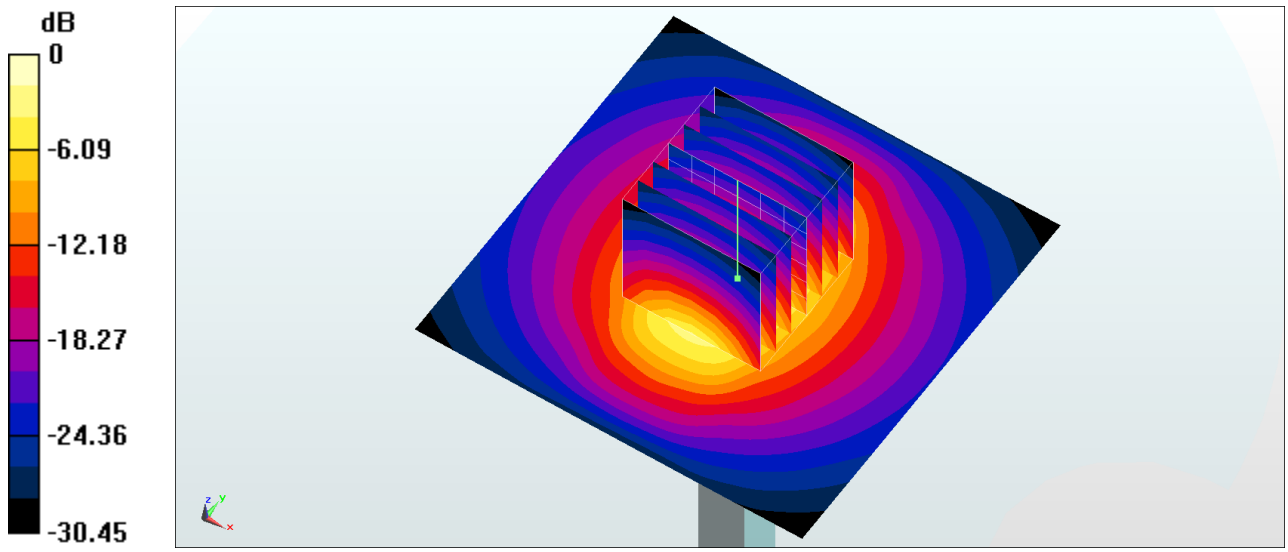

0 dB = 22.2 W/kg = 13.46 dBW/kg

System Check_Head_5250MHz

DUT: D5GHzV2-1006

Communication System: CW; Frequency: 5250 MHz;Duty Cycle: 1:1
Medium: HSL_5G_180529 Medium parameters used : f = 5250 MHz; σ = 4.54 S/m; ε_r = 36.809; ρ = 1000 kg/m^3
Ambient Temperature：23.5 ℃; Liquid Temperature：22.5 ℃

DASY5 Configuration:
- Probe: EX3DV4 - SN3976; ConvF(5.56, 5.56, 5.56); Calibrated: 2018/1/23;
- Sensor-Surface: 1.4mm (Mechanical Surface Detection)
- Electronics: DAE4 Sn1338; Calibrated: 2017/12/4
- Phantom: SAM_RIGHT; Type: QD000P40CD; Serial: 1719
- Measurement SW: DASY52, Version 52.10 (0);SEMCAD X Version 14.6.10 (7417)

Pin=100mW/Area Scan (71x71x1): Interpolated grid: dx=1.000 mm, dy=1.000 mm
Maximum value of SAR (interpolated) = 19.3 W/kg

Pin=100mW/Zoom Scan (7x7x7)/Cube 0: Measurement grid: dx=4mm, dy=4mm, dz=1.4mm
Reference Value = 74.39 V/m; Power Drift = -0.14 dB
Peak SAR (extrapolated) = 33.8 W/kg
SAR(1 g) = 8.07 W/kg; SAR(10 g) = 2.24 W/kg
Maximum value of SAR (measured) = 19.5 W/kg

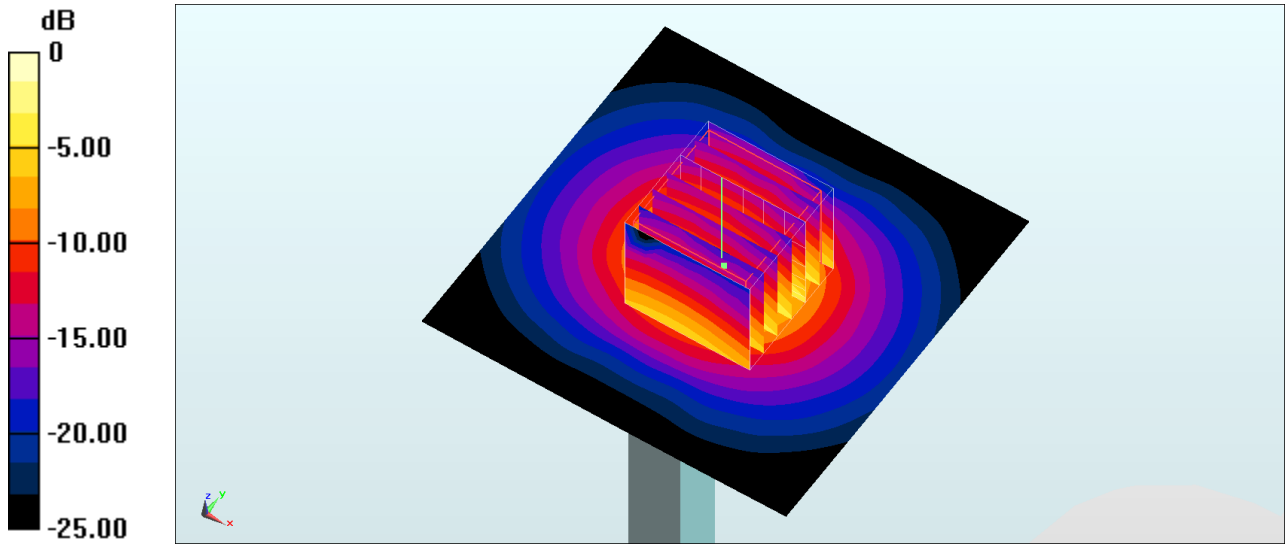

0 dB = 19.3 W/kg = 12.86 dBW/kg

System Check_Head_5600MHz

DUT: D5GHzV2-1006

Communication System: CW; Frequency: 5600 MHz;Duty Cycle: 1:1
Medium: HSL_5G_180527 Medium parameters used: f = 5600 MHz; σ = 4.925 S/m; ε_r = 36.872; ρ = 1000 kg/m^3
Ambient Temperature：23.2 ℃; Liquid Temperature：22.2 ℃

DASY5 Configuration:
- Probe: EX3DV4 - SN3976; ConvF(4.97, 4.97, 4.97); Calibrated: 2018/1/23;
- Sensor-Surface: 1.4mm (Mechanical Surface Detection)
- Electronics: DAE4 Sn1338; Calibrated: 2017/12/4
- Phantom: SAM_Right; Type: QD000P40CD; Serial: 1884
- Measurement SW: DASY52, Version 52.10 (1);SEMCAD X Version 14.6.11 (7437)

Pin=100mW/Area Scan (71x71x1): Interpolated grid: dx=1.000 mm, dy=1.000 mm
Maximum value of SAR (interpolated) = 21.9 W/kg

Pin=100mW/Zoom Scan (7x7x7)/Cube 0: Measurement grid: dx=4mm, dy=4mm, dz=1.4mm
Reference Value = 74.90 V/m; Power Drift = 0.05 dB
Peak SAR (extrapolated) = 38.6 W/kg
SAR(1 g) = 8.74 W/kg; SAR(10 g) = 2.36 W/kg
Maximum value of SAR (measured) = 22.2 W/kg

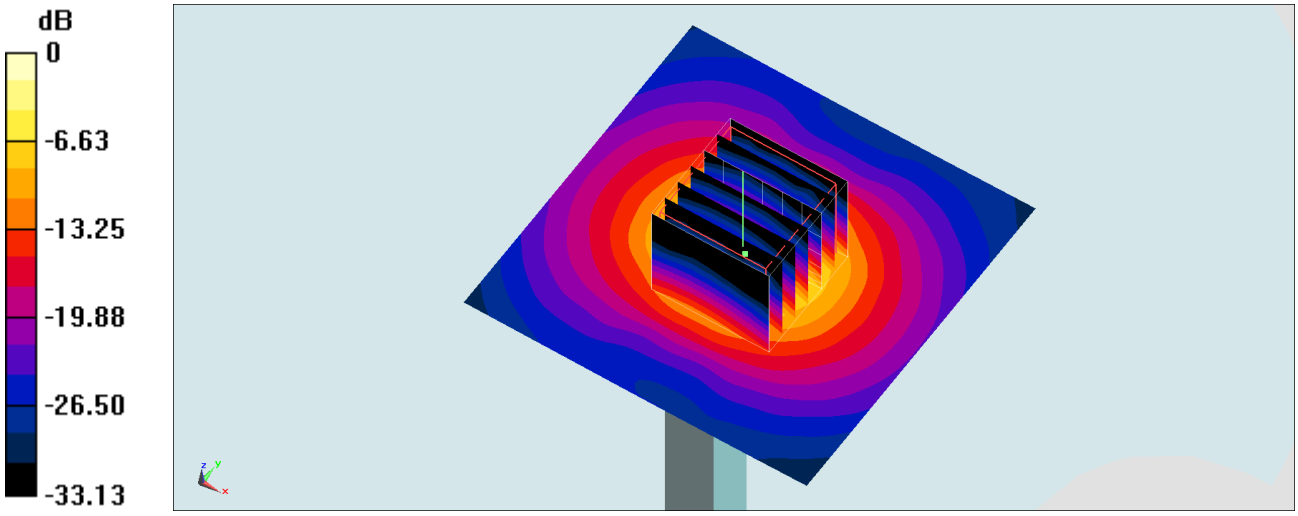

0 dB = 22.2 W/kg = 13.46 dBW/kg

System Check_Body_5600MHz

DUT: D5GHzV2-1006

Communication System: CW; Frequency: 5600 MHz;Duty Cycle: 1:1
Medium: MSL_5G_180527 Medium parameters used: f = 5600 MHz; σ = 5.972 S/m; ε_r = 46.437; ρ = 1000 kg/m^3
Ambient Temperature：23.2 ℃; Liquid Temperature：22.2 ℃

DASY5 Configuration:
- Probe: EX3DV4 - SN3976; ConvF(4.28, 4.28, 4.28); Calibrated: 2018/1/23;
- Sensor-Surface: 1.4mm (Mechanical Surface Detection)
- Electronics: DAE4 Sn1338; Calibrated: 2017/12/4
- Phantom: SAM_Right; Type: QD000P40CD; Serial: 1884
- Measurement SW: DASY52, Version 52.10 (1);SEMCAD X Version 14.6.11 (7437)

Pin=100mW/Area Scan (71x71x1): Interpolated grid: dx=1.000 mm, dy=1.000 mm
Maximum value of SAR (interpolated) = 22.8 W/kg

Pin=100mW/Zoom Scan (7x7x7)/Cube 0: Measurement grid: dx=4mm, dy=4mm, dz=1.4mm
Reference Value = 65.69 V/m; Power Drift = -0.11 dB
Peak SAR (extrapolated) = 37.8 W/kg
SAR(1 g) = 8.45 W/kg; SAR(10 g) = 2.35 W/kg
Maximum value of SAR (measured) = 21.3 W/kg

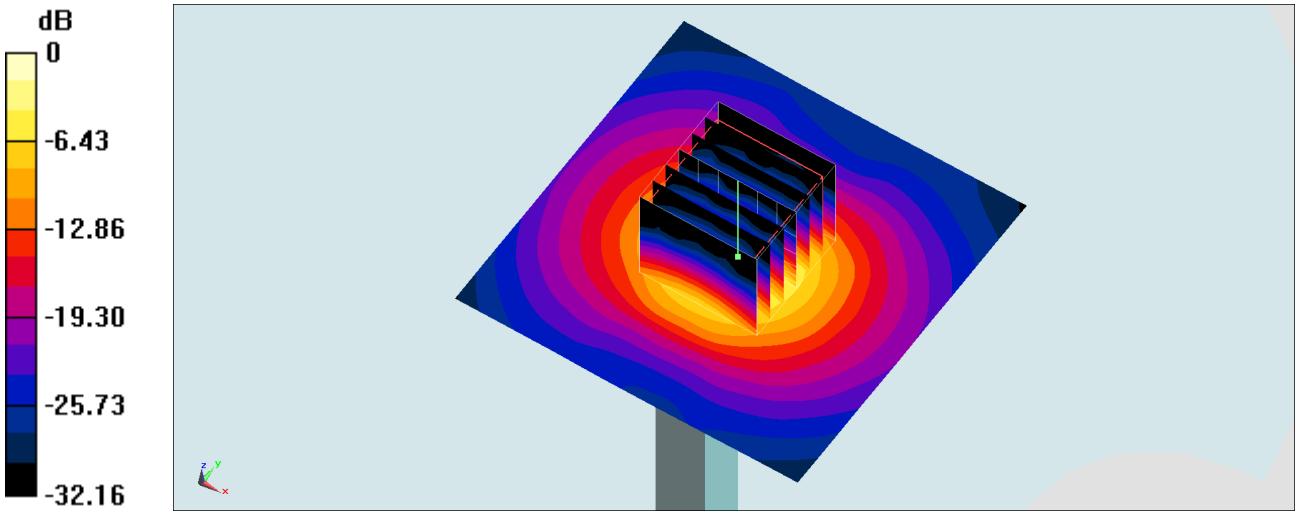

0 dB = 21.3 W/kg = 13.28 dBW/kg

System Check_Head_5750MHz

DUT: D5GHzV2-1006

Communication System: CW; Frequency: 5750 MHz;Duty Cycle: 1:1
Medium: HSL_5G_180529 Medium parameters used: f = 5750 MHz; σ = 5.041 S/m; ε_r = 36.167; ρ = 1000 kg/m^3
Ambient Temperature：23.5 ℃; Liquid Temperature：22.5 ℃

DASY5 Configuration:
- Probe: EX3DV4 - SN3976; ConvF(5.04, 5.04, 5.04); Calibrated: 2018/1/23;
- Sensor-Surface: 1.4mm (Mechanical Surface Detection)
- Electronics: DAE4 Sn1338; Calibrated: 2017/12/4
- Phantom: SAM_RIGHT; Type: QD000P40CD; Serial: 1719
- Measurement SW: DASY52, Version 52.10 (0);SEMCAD X Version 14.6.10 (7417)

Pin=100mW/Area Scan (71x71x1): Interpolated grid: dx=1.000 mm, dy=1.000 mm
Maximum value of SAR (interpolated) = 20.0 W/kg

Pin=100mW/Zoom Scan (7x7x7)/Cube 0: Measurement grid: dx=4mm, dy=4mm, dz=1.4mm
Reference Value = 70.92 V/m; Power Drift = -0.01 dB
Peak SAR (extrapolated) = 36.3 W/kg
SAR(1 g) = 7.9 W/kg; SAR(10 g) = 2.14 W/kg
Maximum value of SAR (measured) = 20.3 W/kg

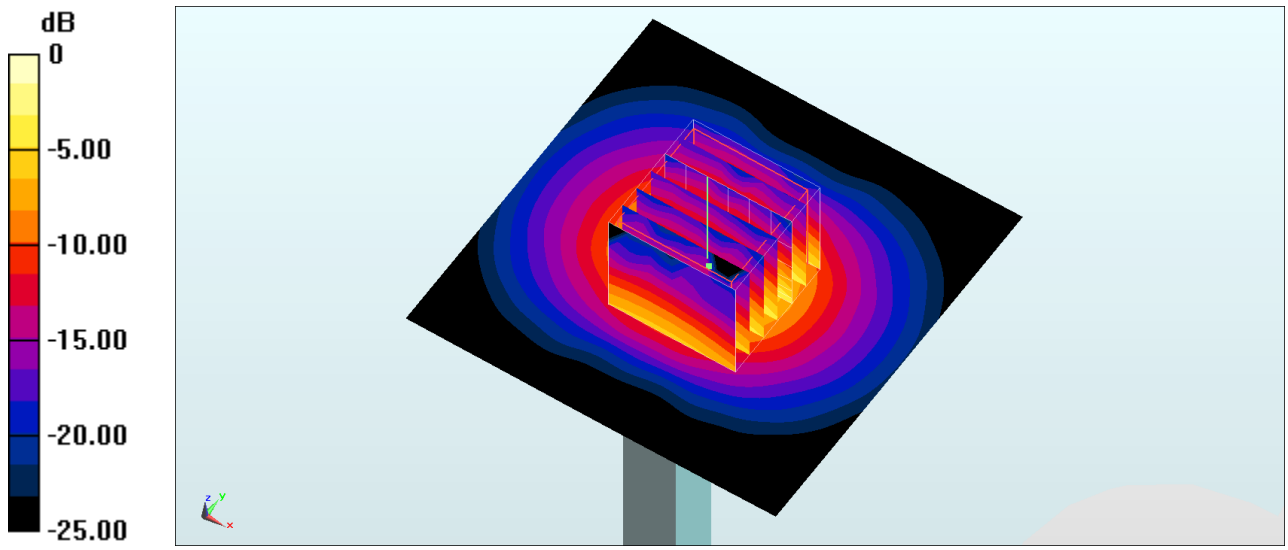

0 dB = 20.0 W/kg = 13.01 dBW/kg