FCC RF Test Report

APPLICANT	:	Xiaomi Communications Co., Ltd.
EQUIPMENT	:	Mobile Phone
BRAND NAME	:	MI
MODEL NAME	:	M1803D5XA
FCC ID	:	2AFZZ-XMSD5X
STANDARD	:	FCC 47 CFR Part 2, and 90(S)
CLASSIFICATION	:	PCS Licensed Transmitter Held to Ear (PCE)

The product was received on Feb. 08, 2018 and testing was completed on Mar. 30, 2018. We, Sporton International (Kunshan) Inc., would like to declare that the tested sample has been evaluated in accordance with the procedures given in ANSI/TIA-603-E and shown compliance with the applicable technical standards.

The test results in this report apply exclusively to the tested model / sample. Without written approval of Sporton International (Kunshan) Inc., the test report shall not be reproduced except in full.

James Huang

Approved by: James Huang / Manager

TESTING
NVLAP LAB CODE 600155-0

Sporton International (Kunshan) Inc.
No.3-2 Ping-Xiang Rd, Kunshan Development Zone Kunshan City Jiangsu Province 215335 China

TABLE OF CONTENTS

REVISION HISTORY **3**

SUMMARY OF TEST RESULT **4**

1 GENERAL DESCRIPTION **5**

1.1. Applicant 5
1.2. Manufacturer 5
1.3. Feature of Equipment Under Test 5
1.4. Product Specification of Equipment Under Test 6
1.5. Modification of EUT 6
1.6. Maximum Frequency Tolerance, Emission Designator and Conducted Power 6
1.7. Testing Site 7
1.8. Applied Standards 7

2 TEST CONFIGURATION OF EQUIPMENT UNDER TEST **8**

2.1 Test Mode 8
2.2 Connection Diagram of Test System 9
2.3 Support Unit used in test configuration and system 9
2.4 Measurement Results Explanation Example 10

3 TEST RESULT **11**

3.1 Conducted Output Power Measurement 11
3.2 99% Occupied Bandwidth and 26dB Bandwidth Measurement 13
3.3 Emissions Mask Measurement 18
3.4 Emissions Mask – Out Of Band Emissions Measurement 20
3.5 Field Strength of Spurious Radiation Measurement 23
3.6 Frequency Stability Measurement 26

4 LIST OF MEASURING EQUIPMENT **29**

5 UNCERTAINTY OF EVALUATION **30**

APPENDIX A. SETUP PHOTOGRAPHS

REVISION HISTORY

REPORT NO.	VERSION	DESCRIPTION	ISSUED DATE
FW820821A	Rev. 01	Initial issue of report	Apr. 08, 2018

SUMMARY OF TEST RESULT

Report Section	FCC Rule	Description	Limit	Result	Remark
3.1	§2.1046	Conducted Output Power	Reporting only	PASS	-
3.2	§2.1049 §90.209	99% Occupied Bandwidth and 26dB Bandwidth	Reporting only	PASS	-
3.3	§2.1051 §90.691	Emission masks – In-band emissions	< $50+10\log_{10}$(P[Watts])	PASS	-
3.4	§2.1051 §90.691	Emission masks – Out of band emissions	< $43+10\log_{10}$(P[Watts])	PASS	-
3.5	§2.1053 §90.691	Field Strength of Spurious Radiation	< $43+10\log_{10}$(P[Watts])	PASS	Under limit 38.67 dB at 1640.000 MHz
3.6	§2.1055 §90.213	Frequency Stability for Temperature & Voltage	< 2.5 ppm	PASS	-

1 General Description

1.1. Applicant

Xiaomi Communications Co., Ltd.
The Rainbow City of China Resources, NO.68,Qinghe Middle Street, Haidian District, Beijing, China

1.2. Manufacturer

Xiaomi Communications Co., Ltd.
The Rainbow City of China Resources, NO.68,Qinghe Middle Street, Haidian District, Beijing, China

1.3. Feature of Equipment Under Test

Product Feature & Specification	
Equipment	Mobile Phone
Brand Name	MI
Model Name	M1803D5XA
FCC ID	2AFZZ-XMSD5X
EUT supports Radios application	CDMA/EV-DO/GSM/GPRS/EGPRS/WCDMA/HSPA/ DC-HSDPA/HSPA+/LTE/NFC WLAN 2.4GHz 802.11b/g/n HT20/HT40 WLAN 5GHz 802.11a/n HT20/HT40 WLAN 5GHz 802.11ac VHT20/VHT40/VHT80 Bluetooth v3.0 + EDR/Bluetooth v4.0 LE/ Bluetooth v4.1 LE/Bluetooth v4.2 LE/Bluetooth v5.0 LE
IMEI/MEID Code	Conducted: 867601030223652/867601030223660 Radiation: 867601030222613/867601030222621
HW Version	P3.0
SW Version	MIUI 9
EUT Stage	Pre-Production Unit

Note: There are two types of EUT sample 1 and sample 2, the differences between two samples are only for Flash, sample 1 is 6GB+64GB, sample 2 is 6GB+128GB. According to the difference, choose sample 1 to perform full tests.

1.4. Product Specification of Equipment Under Test

Product Specification subjective to this standard	
Tx Frequency	CDMA2000 BC10 : 817.9 MHz ~ 823.1 MHz
Rx Frequency	CDMA2000 BC10 : 862.9 MHz ~ 868.1 MHz
Maximum Output Power to Antenna	CDMA2000 BC10 : 23.91 dBm
Antenna Type	LDS Antenna
Antenna Gain	0.37dBi
Type of Modulation	CDMA2000 1xRTT : QPSK CDMA2000 1xEV-DO : QPSK/8PSK

Remark: This test report recorded only product characteristics and test results of PCS Licensed Transmitter Held to Ear (PCE).

1.5. Modification of EUT

No modifications are made to the EUT during all test items.

1.6. Maximum Frequency Tolerance, Emission Designator and Conducted Power

FCC Rule	System	Type of Modulation	Frequency Tolerance (ppm)	Emission Designator	Maximum Conducted power(W)
Part 90S	CDMA2000 BC10 1xRTT	QPSK	0.0280 ppm	1M27F9W	0.2460

1.7. Testing Site

Sporton International (Kunshan) Inc. is accredited to ISO 17025 by National Voluntary Laboratory Accreditation Program (NVLAP code: 600155-0) and the FCC designation No. is CN5013.

Test Site	Sporton International (Kunshan) Inc.		
Test Site Location	No.3-2 Ping-Xiang Rd, Kunshan Development Zone Kunshan City Jiangsu Province 215335 China TEL : +86-512-57900158 FAX : +86-512-57900958		
Test Site No.	**Sporton Site No.**		**FCC Test Firm Registration No.**
	TH01-KS	03CH03-KS	630927

Note: The test site complies with ANSI C63.4 2014 requirement.

1.8. Applied Standards

According to the specifications of the manufacturer, the EUT must comply with the requirements of the following standards:

- FCC 47 CFR Part 2, 90
- ANSI/TIA-603-E

Remark:

1. All test items were verified and recorded according to the standards and without any deviation during the test.
2. This EUT has also been tested and complied with the requirements of FCC Part 15, Subpart B, recorded in a separate test report.

2 Test Configuration of Equipment Under Test

2.1 Test Mode

During all testing, EUT is in link mode with base station emulator at maximum power level. The spurious emission measurements were carried out in semi-anechoic chamber with 3-meter test range, and EUT is rotated on three test planes to find out the worst emission.

Frequency range investigated for radiated emission: 30MHz to 10th harmonic.

Test Modes		
Band	**Radiated TCs**	**Conducted TCs**
CDMA2000 BC10	■ 1xRTT Link	■ 1xRTT Link

Note: The maximum RF output power levels are 1xRTT RC1 SO55 mode for CDMA2000 BC10 on QPSK Link; only these modes were used for all tests.

2.2 Connection Diagram of Test System

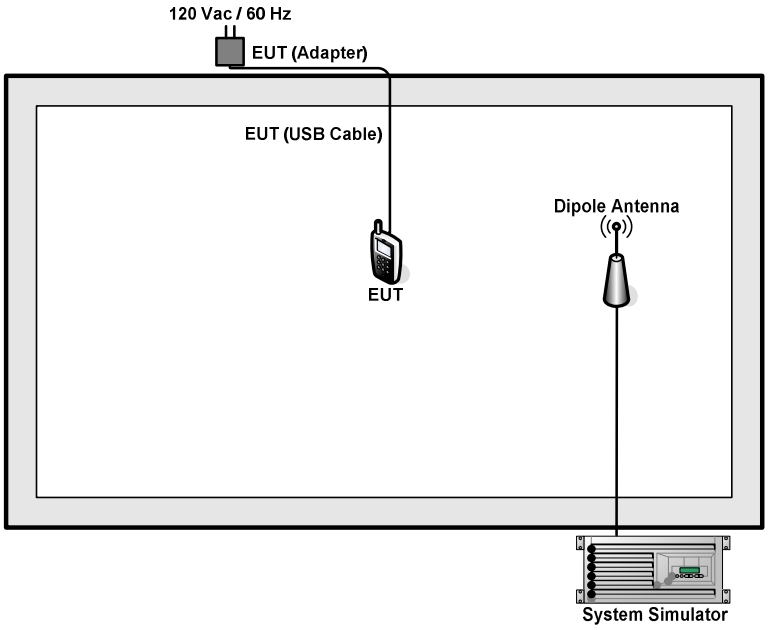

2.3 Support Unit used in test configuration and system

Item	Equipment	Trade Name	Model No.	FCC ID	Data Cable	Power Cord
1.	System Simulator	R&S	CMU 200	N/A	N/A	Unshielded, 1.8 m
2.	DC Power Supply	GW INSTEK	GPS-3030D	N/A	N/A	Unshielded, 1.8 m

2.4 Measurement Results Explanation Example

For all conducted test items:

The offset level is set in the spectrum analyzer to compensate the RF cable loss and attenuator factor between EUT conducted output port and spectrum analyzer. With the offset compensation, the spectrum analyzer reading level is exactly the EUT RF output level.

Example:

The spectrum analyzer offset is derived from RF cable loss and attenuator factor.

Offset = RF cable loss + attenuator factor.

Following shows an offset computation example with cable loss 4.3 dB and 10dB attenuator.

Offset (dB) = RF cable loss (dB) + attenuator factor (dB).

= 4.3 + 10 = 14.3 (dB)

3 Test Result

3.1 Conducted Output Power Measurement

3.1.1 Description of the Conducted Output Power Measurement

A base station simulator was used to establish communication with the EUT. Its parameters were set to transmit the maximum power on the EUT. The measured power in the radio frequency on the transmitter output terminals shall be reported.

3.1.2 Measuring Instruments

The measuring equipment is listed in the section 4 of this test report.

3.1.3 Test Procedures

1. The transmitter output port was connected to base station.
2. Set EUT at maximum power through base station.
3. Select lowest, middle, and highest channels for each band and different modulation.

3.1.4 Test Setup

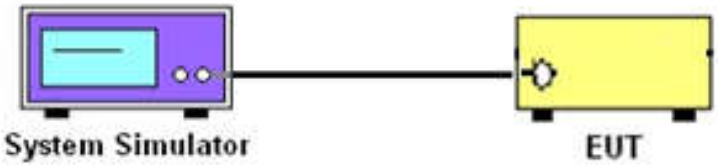

3.1.5 Test Result of Conducted Output Power

Conducted Power (*Unit: dBm)			
Band	**CDMA2000 BC10**		
Channel	**476**	**580**	**684**
Frequency	**817.9**	**820.5**	**823.1**
1xRTT RC1+SO55	**23.91**	23.75	23.79
1xRTT RC3+SO55	23.78	23.77	23.81
1xRTT RC3 SO32(+ F-SCH)	23.89	23.87	23.85
1xRTT RC3 SO32 (+SCH)	23.88	23.88	23.83
1xEVDO RTAP 153.6Kbps	23.90	23.86	23.84
1xEVDO RETAP 4096Bits	23.90	23.86	23.83

Note: Maximum burst average power for CDMA.

3.2 99% Occupied Bandwidth and 26dB Bandwidth Measurement

3.2.1 Description of (Occupied) Bandwidth Limitations Measurement

The 99% occupied bandwidth is the width of a frequency band such that, below the lower and above the upper frequency limits, the mean powers emitted are each equal to a specified percentage 0.5% of the total mean transmitted power.

The emission bandwidth is defined as the width of the signal between two points, located at the 2 sides of the carrier frequency, outside of which all emissions are attenuated at least 26 dB below the transmitter power.

3.2.2 Measuring Instruments

The measuring equipment is listed in the section 4 of this test report.

3.2.3 Test Procedures

1. The EUT was connected to Spectrum Analyzer and Base Station via power divider.
2. The 99% and 26 dB occupied bandwidth (BW) of the middle channel for the highest RF powers were measured.

3.2.4 Test Setup

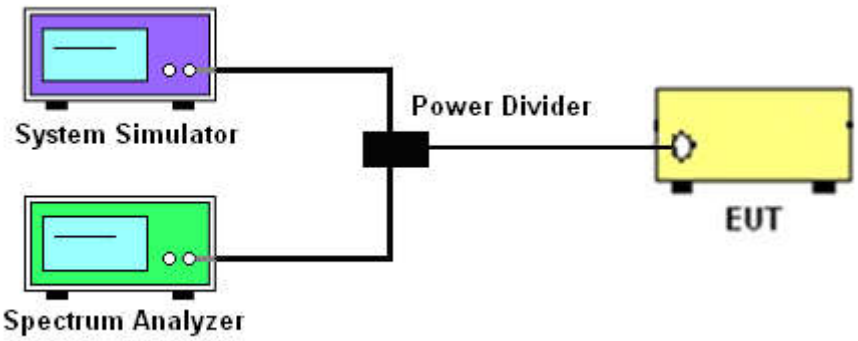

3.2.5 Test Result of 99% Occupied Bandwidth and 26dB Bandwidth

CDMA2000 BC10			
Test Mode	**CDMA 2000 1xRTT**		
Test Status	**RC1 SO55**		
Channel	**476 (Low)**	**580 (Mid)**	**684 (High)**
Frequency (MHz)	**817.9**	**820.5**	**823.1**
99% OBW (MHz)	1.27	1.27	1.27
26dB BW (MHz)	1.43	1.42	1.43

3.2.6 Test Result (Plots) of 99% Occupied Bandwidth and 26dB Bandwidth

Band :	CDMA2000 BC 10	Test Mode :	1xRTT_RC1 SO55

99% Occupied Bandwidth Plot on Channel 476 (817.9MHz)

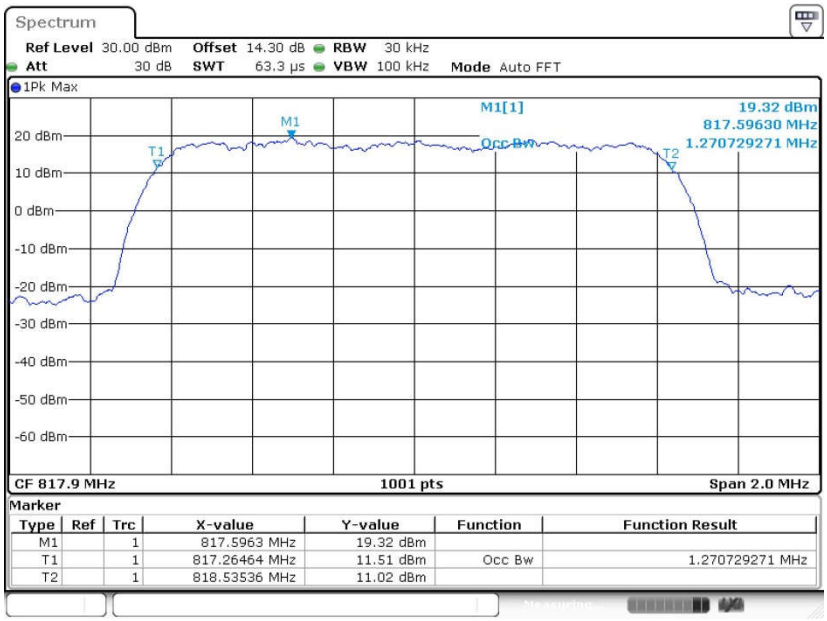

Date: 27.MAR.2018 11:12:20

26dB Bandwidth Plot on Channel 476 (817.9MHz)

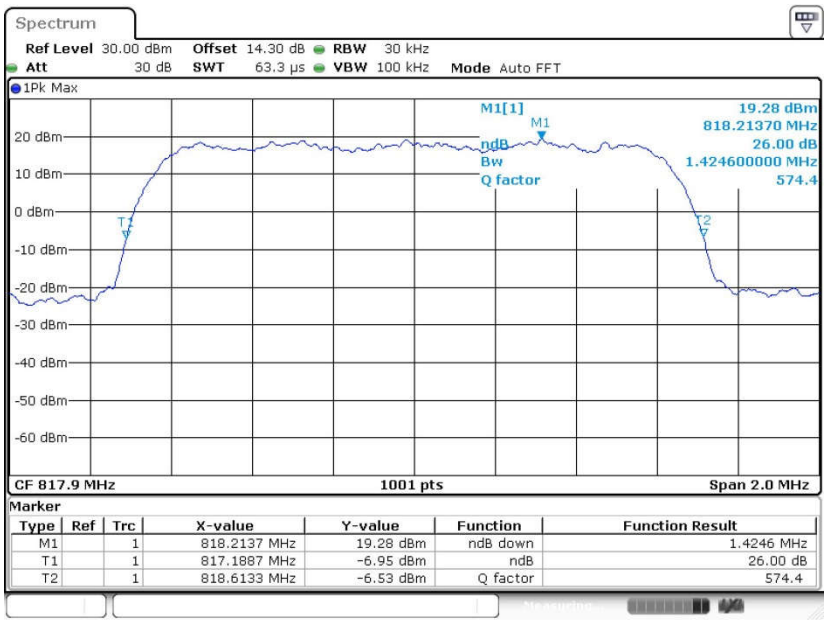

Date: 27.MAR.2018 11:06:41

99% Occupied Bandwidth Plot on Channel 580 (820.5MHz)

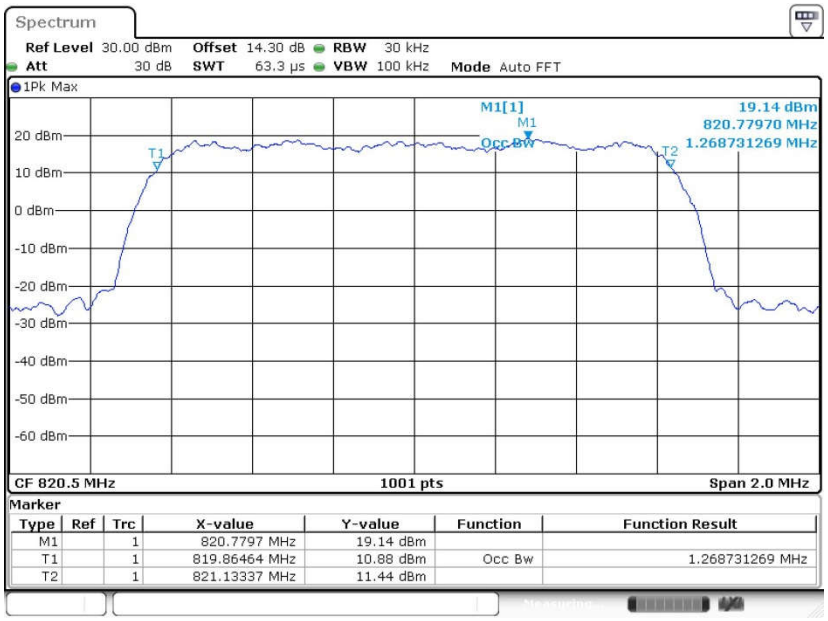

Date: 27.MAR.2018 11:12:55

26dB Bandwidth Plot on Channel 580 (820.5MHz)

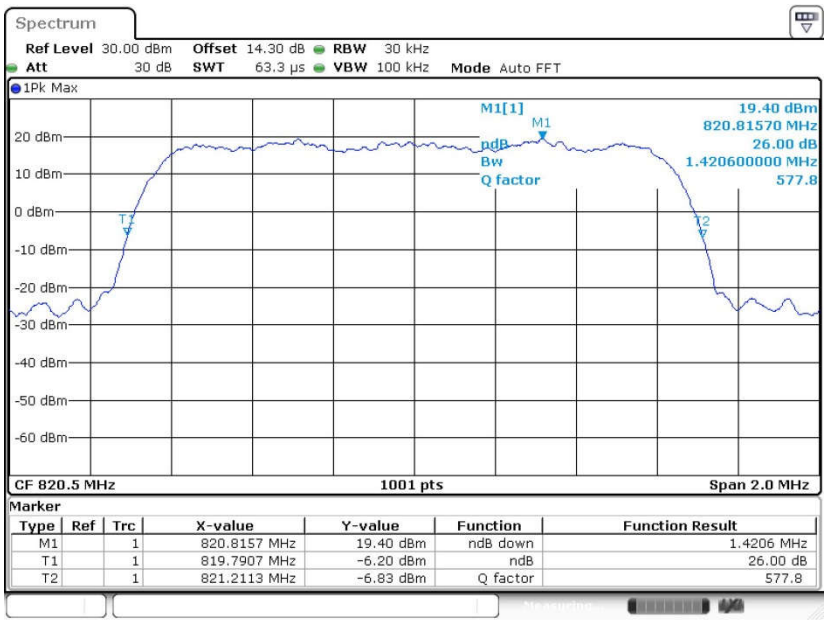

Date: 27.MAR.2018 11:07:25

99% Occupied Bandwidth Plot on Channel 684 (823.1MHz)

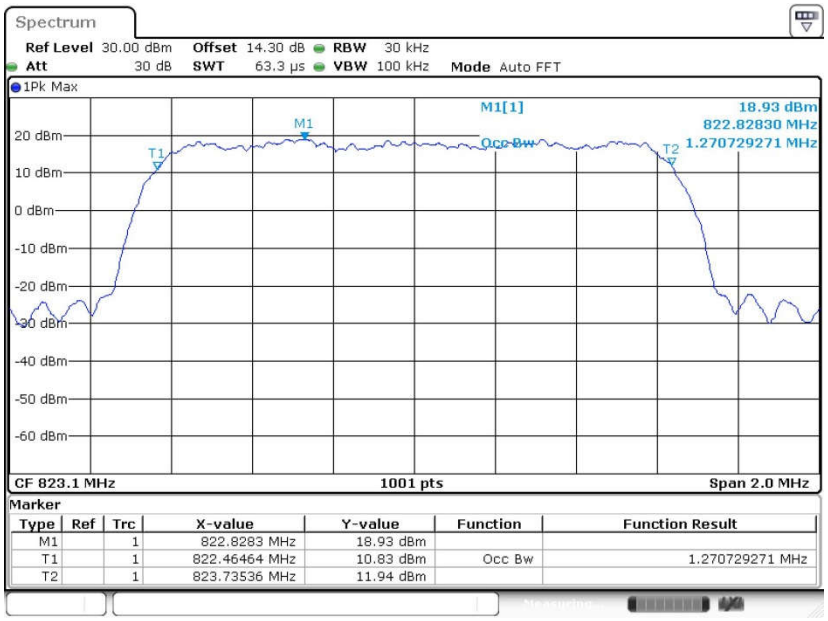

Date: 27.MAR.2018 11:13:42

26dB Bandwidth Plot on Channel 684 (823.1MHz)

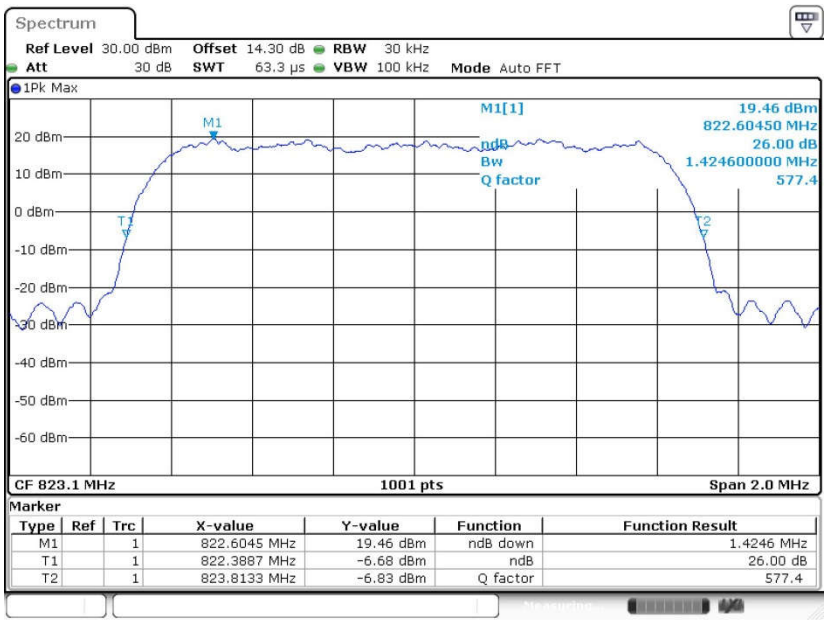

Date: 27.MAR.2018 11:07:59

3.3 Emissions Mask Measurement

3.3.1 Description of Emissions Mask Measurement

Equipment used in this licensed to EA or non-EA systems shall comply with the emission mask provisions of FCC Part 90.691.(a)(1)

(a). Out-of-band emission requirement shall apply only to the "outer" channels included in an EA license and to spectrum adjacent to interior channels used by incumbent licensees. The emission limits are as follows:

(1) For any frequency removed from the EA licensee's frequency block by up to and including 37.5 kHz, the power of any emission shall be attenuated below the transmitter power (P) in watts by at least 116 Log10(f/6.1) decibels or 50 + 10 Log10(P) decibels or 80 decibels, whichever is the lesser attenuation, where f is the frequency removed from the center of the outer channel in the block in kilohertz and where f is greater than 12.5 kHz.

3.3.2 Measuring Instruments

The measuring equipment is listed in the section 4 of this test report.

3.3.3 Test Procedures

1. The EUT was connected to spectrum analyzer and base station via power divider.
2. The emissions mask of low and high channels for the highest RF powers were measured.
3. The RBW was set 1% of 99% Occupied Bandwidth, and VBW was set 3 times of RBW.
4. The final test results were shown below plots with a correction offset factor including cable loss, insertion loss of power divider.

3.3.4 Test Setup

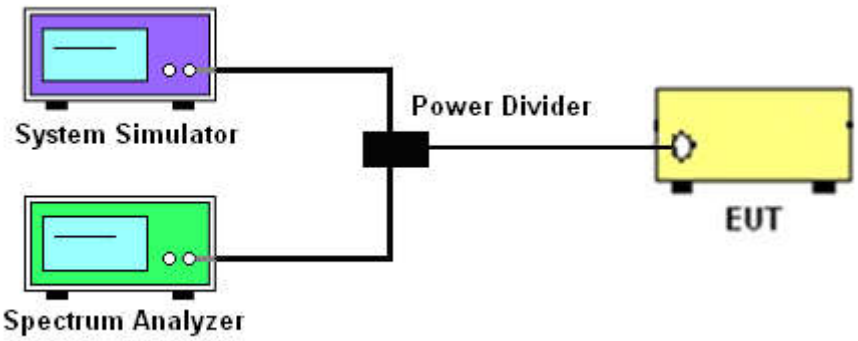

3.3.5 Test Result (Plots) of Conducted Emissions Mask

Band :	CDMA2000 BC10	Test Mode :	1xRTT_RC1 SO55

Lower Band Edge Plot on Channel 476 (817.9MHz)

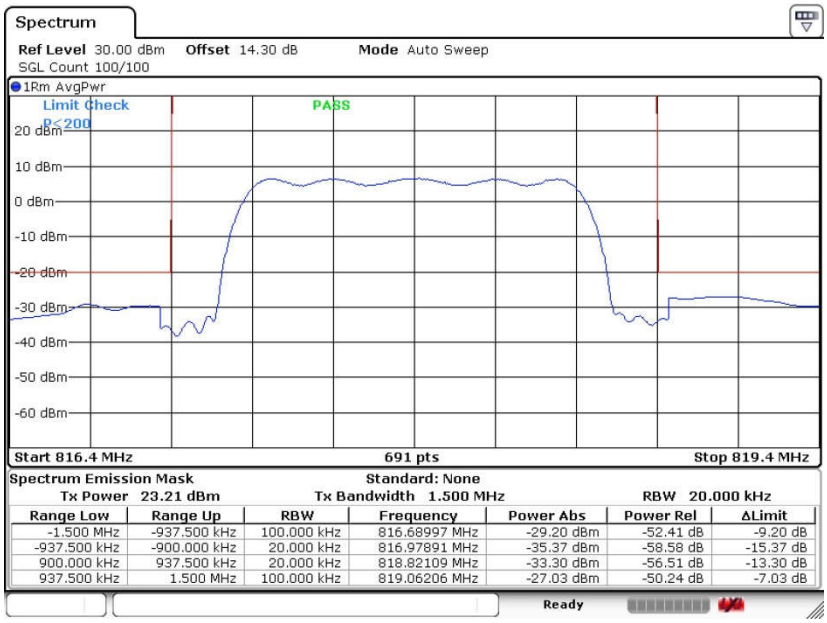

Date: 27.MAR.2018 11:30:04

Higher Band Edge Plot on Channel 684 (823.1MHz)

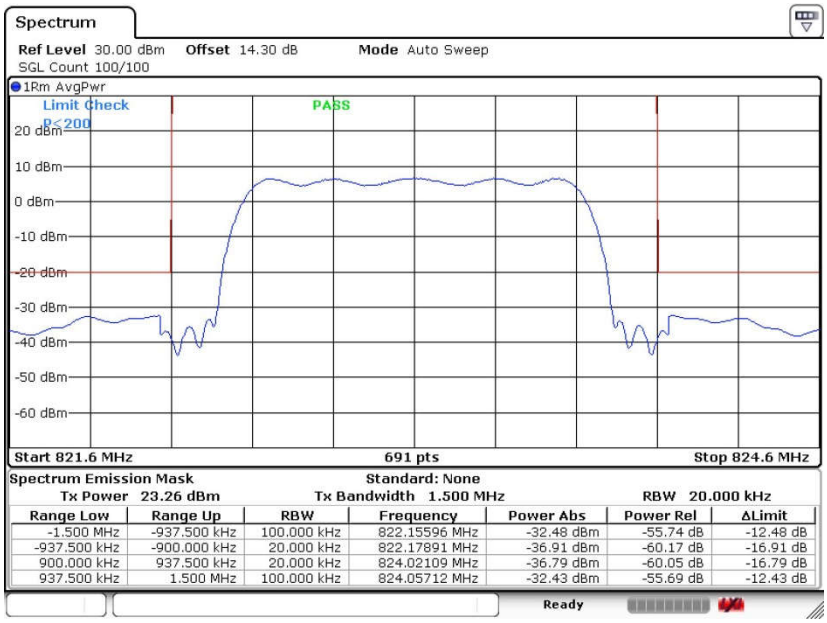

Date: 27.MAR.2018 11:26:16

3.4 Emissions Mask – Out Of Band Emissions Measurement

3.4.1 Description of Conducted Emissions Out of band emissions measurement

The power of any emission FCC Part 90.691 (a)(2) on any frequency removed from the assigned frequency by more than 250 percent of the authorized bandwidth at least 43 + 10 log (P) dB. It is measured by means of a calibrated spectrum analyzer and scanned from 30MHz up to a frequency including its 10th harmonic.

3.4.2 Measuring Instruments

The measuring equipment is listed in the section 4 of this test report.

3.4.3 Test Procedures

1. The EUT was connected to spectrum analyzer and base station via power divider.
2. The middle channel for the highest RF power within the transmitting frequency was measured.
3. The conducted spurious emission for the whole frequency range was taken.
4. The final test results were shown below plots with a correction offset factor including cable loss, insertion loss of power divider.

3.4.4 Test Setup

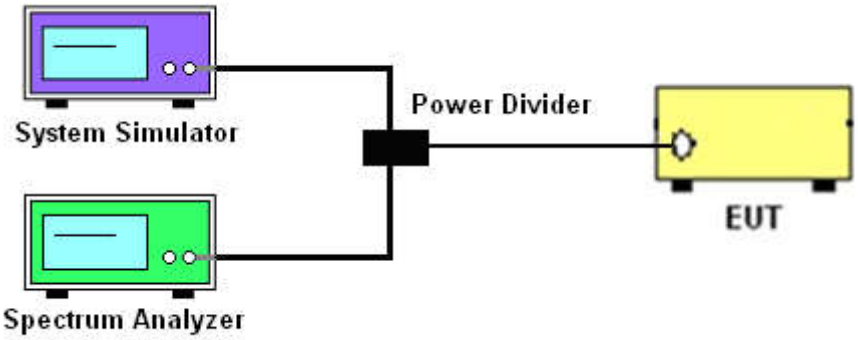

3.4.5 Test Result (Plots) of Conducted Emission

Band :	CDMA2000 BC10	Test Mode :	1xRTT_RC1 SO55

Conducted Emission Plot between on Channel 476 (817.9MHz)

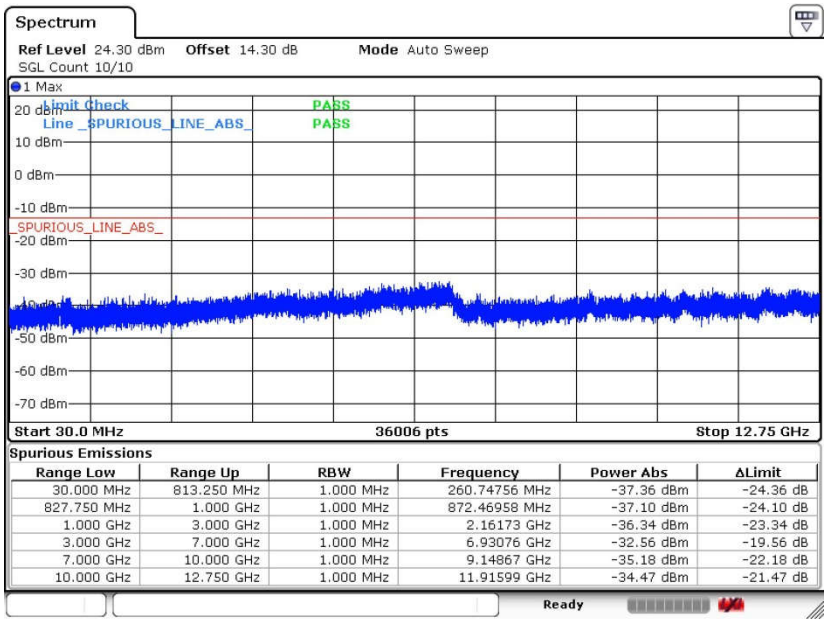

Spurious Emissions

Range Low	Range Up	RBW	Frequency	Power Abs	ΔLimit
30.000 MHz	813.250 MHz	1.000 MHz	260.74756 MHz	-37.36 dBm	-24.36 dB
827.750 MHz	1.000 GHz	1.000 MHz	872.46958 MHz	-37.10 dBm	-24.10 dB
1.000 GHz	3.000 GHz	1.000 MHz	2.16173 GHz	-36.34 dBm	-23.34 dB
3.000 GHz	7.000 GHz	1.000 MHz	6.93076 GHz	-32.56 dBm	-19.56 dB
7.000 GHz	10.000 GHz	1.000 MHz	9.14867 GHz	-35.18 dBm	-22.18 dB
10.000 GHz	12.750 GHz	1.000 MHz	11.91599 GHz	-34.47 dBm	-21.47 dB

Date: 27.MAR.2018 11:31:07

Conducted Emission Plot between on Channel 580 (820.5MHz)

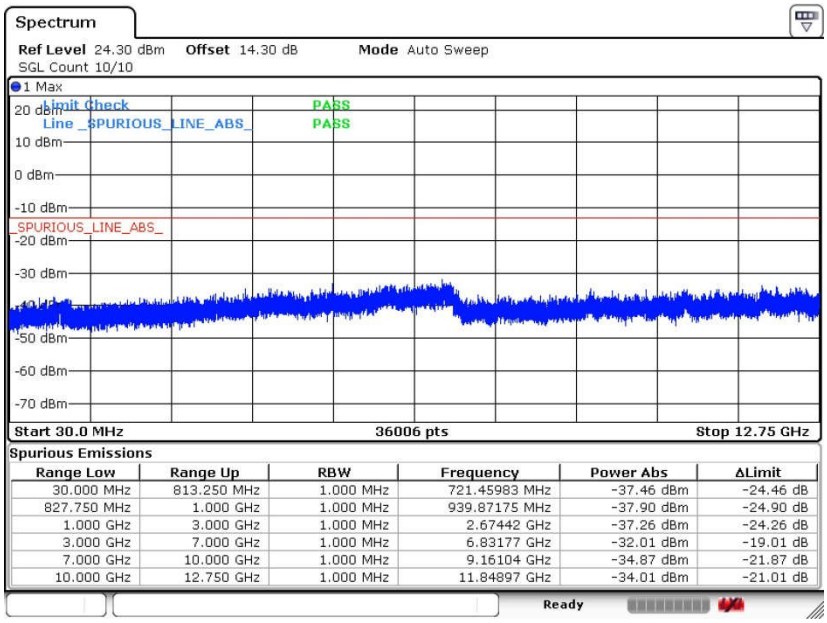

Spurious Emissions

Range Low	Range Up	RBW	Frequency	Power Abs	ΔLimit
30.000 MHz	813.250 MHz	1.000 MHz	721.45983 MHz	-37.46 dBm	-24.46 dB
827.750 MHz	1.000 GHz	1.000 MHz	939.87175 MHz	-37.90 dBm	-24.90 dB
1.000 GHz	3.000 GHz	1.000 MHz	2.67442 GHz	-37.26 dBm	-24.26 dB
3.000 GHz	7.000 GHz	1.000 MHz	6.83177 GHz	-32.01 dBm	-19.01 dB
7.000 GHz	10.000 GHz	1.000 MHz	9.16104 GHz	-34.87 dBm	-21.87 dB
10.000 GHz	12.750 GHz	1.000 MHz	11.84897 GHz	-34.01 dBm	-21.01 dB

Date: 27.MAR.2018 11:31:37

Conducted Emission Plot between on Channel 684 (823.1MHz)

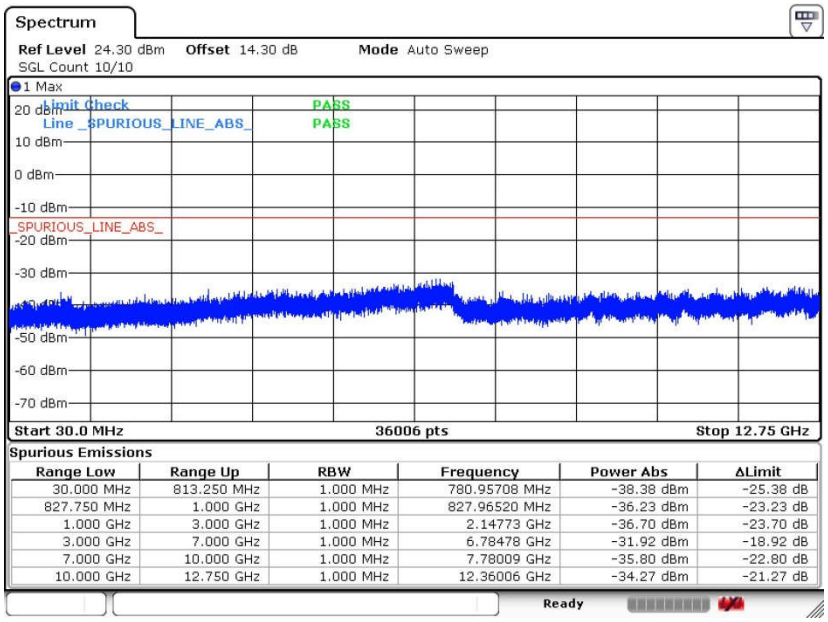

Spurious Emissions

Range Low	Range Up	RBW	Frequency	Power Abs	ΔLimit
30.000 MHz	813.250 MHz	1.000 MHz	780.95708 MHz	-38.38 dBm	-25.38 dB
827.750 MHz	1.000 GHz	1.000 MHz	827.96520 MHz	-36.23 dBm	-23.23 dB
1.000 GHz	3.000 GHz	1.000 MHz	2.14773 GHz	-36.70 dBm	-23.70 dB
3.000 GHz	7.000 GHz	1.000 MHz	6.78478 GHz	-31.92 dBm	-18.92 dB
7.000 GHz	10.000 GHz	1.000 MHz	7.78009 GHz	-35.80 dBm	-22.80 dB
10.000 GHz	12.750 GHz	1.000 MHz	12.36006 GHz	-34.27 dBm	-21.27 dB

Date: 27.MAR.2018 11:32:55

3.5 Field Strength of Spurious Radiation Measurement

3.5.1 Description of Field Strength of Spurious Radiated Measurement

The radiated spurious emission was measured by substitution method according to ANSI/TIA-603-E. The power of any emission FCC Part 90.691 on any frequency removed from the assigned frequency by more than 250 percent of the authorized bandwidth at least 43 + 10 log (P) dB. The spectrum is scanned from 30 MHz up to a frequency including its 10th harmonic.

The power of any emission outside of the authorized operating frequency ranges must be attenuated below the transmitter power (P) by a factor of at least $43+10\log_{10}(P[\text{Watts}])$ dB. The spectrum is scanned from 30 MHz up to a frequency including its 10th harmonic.

3.5.2 Measuring Instruments

The measuring equipment is listed in the section 4 of this test report.

3.5.3 Test Procedures

1. The EUT was placed on a rotatable wooden table 0.8 meters for frequency below 1GHz and 1.5 meter for frequency above 1GHz above the ground.
2. The EUT was set 3 meters from the receiving antenna, which was mounted on the antenna tower.
3. The table was rotated 360 degrees to determine the position of the highest spurious emission.
4. The height of the receiving antenna is varied between one meter and four meters to search the maximum spurious emission for both horizontal and vertical polarizations.
5. Make the measurement with the spectrum analyzer's RBW = 1MHz, VBW = 3MHz, Sweep = 500ms, Taking the record of maximum spurious emission.
6. A horn antenna was substituted in place of the EUT and was driven by a signal generator.
7. Tune the output power of signal generator to the same emission level with EUT maximum spurious emission.
8. Taking the record of output power at antenna port.
9. Repeat step 7 to step 8 for another polarization.
10. EIRP (dBm) = S.G. Power – Tx Cable Loss + Tx Antenna Gain
11. ERP (dBm) = EIRP - 2.15
12. The RF fundamental frequency should be excluded against the limit line in the operating frequency band.
13. The limit line is derived from 43 + 10log(P) dB below the transmitter power P(Watts)
    = P(W) - [43 + 10log(P)] (dB)
    = [30 + 10log(P)] (dBm) - [43 + 10log(P)] (dB)
    = -13dBm.

3.5.4 Test Setup

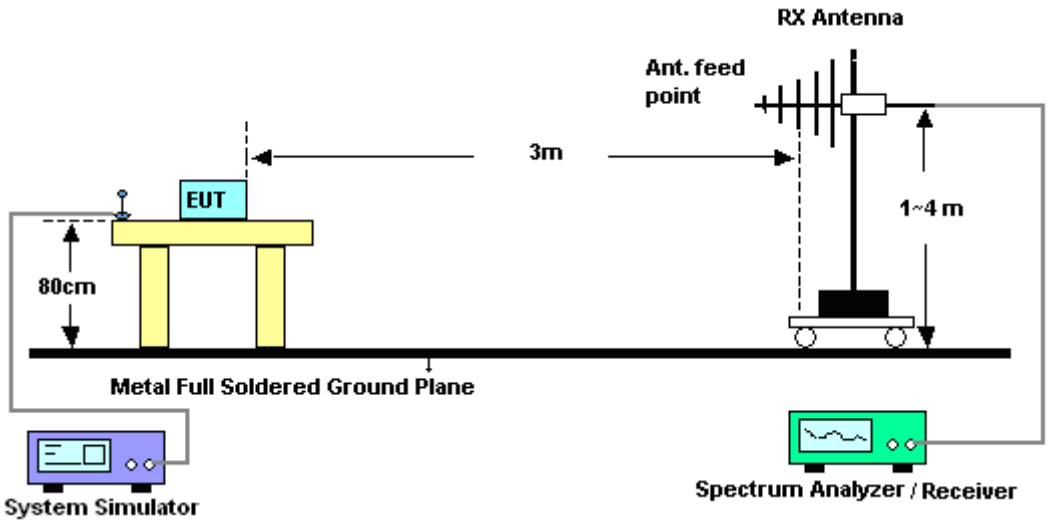

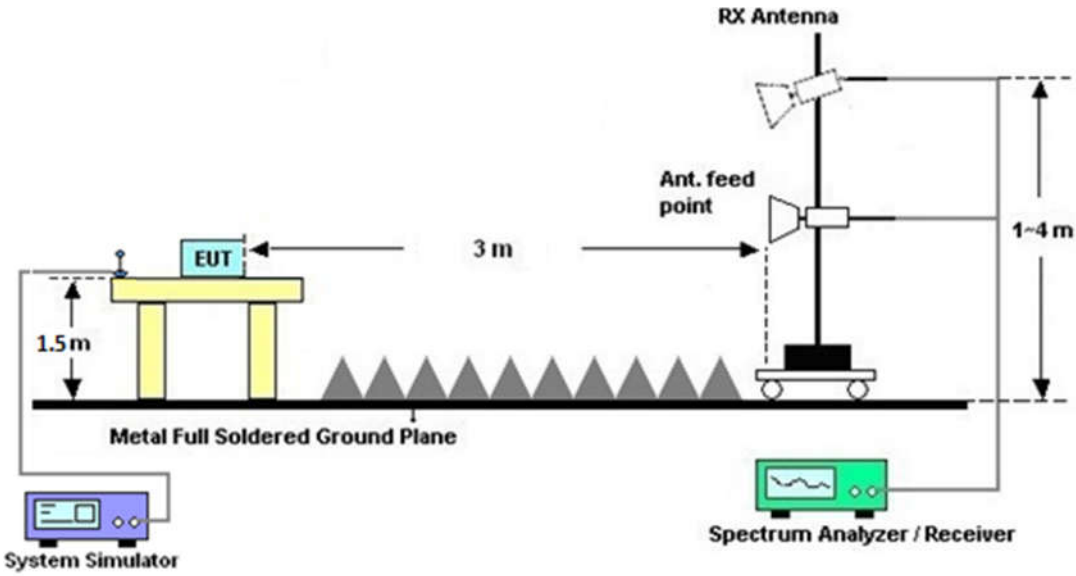

3.5.5 Test Result of Field Strength of Spurious Radiated

Band :	CDMA2000 BC10	**Temperature :**	24~25°C
Test Mode :	1xRTT_RC1 SO55	**Relative Humidity :**	44~45%
Test Engineer :	Leve Zhao	**Polarization :**	Horizontal
Remark :	Spurious emissions within 30-1000MHz were found more than 20dB below limit line.		

Frequency (MHz)	ERP (dBm)	Limit (dBm)	Over Limit (dB)	S.G. Power (dBm)	TX Cable loss (dB)	TX Antenna Gain (dBi)	Polarization (H/V)	Result
1640	-51.67	-13	-38.67	-53.58	1.14	5.20	H	Pass
2462	-60.95	-13	-47.95	-63.58	1.12	5.90	H	Pass
3282	-64.20	-13	-51.20	-67.41	1.34	6.70	H	Pass

Band :	CDMA2000 BC10	**Temperature :**	24~25°C
Test Mode :	1xRTT_RC1 SO55	**Relative Humidity :**	44~45%
Test Engineer :	Leve Zhao	**Polarization :**	Vertical
Remark :	Spurious emissions within 30-1000MHz were found more than 20dB below limit line.		

Frequency (MHz)	ERP (dBm)	Limit (dBm)	Over Limit (dB)	S.G. Power (dBm)	TX Cable loss (dB)	TX Antenna Gain (dBi)	Polarization (H/V)	Result
1642	-53.59	-13	-40.59	-55.50	1.14	5.20	V	Pass
2462	-59.29	-13	-46.29	-61.92	1.12	5.90	V	Pass
3282	-64.54	-13	-51.54	-67.75	1.34	6.70	V	Pass

3.6 Frequency Stability Measurement

3.6.1 Description of Frequency Stability Measurement

The frequency stability shall be measured by variation of ambient temperature and variation of primary supply voltage to ensure that the fundamental emission stays within the authorized frequency block. The frequency stability of the transmitter shall be maintained within ±0.00025% (±2.5ppm) of the center frequency according to FCC Part 90.213.

3.6.2 Measuring Instruments

The measuring equipment is listed in the section 4 of this test report.

3.6.3 Test Procedures for Temperature Variation

1. The EUT was set up in the thermal chamber and connected with the base station.
2. With power OFF, the temperature was decreased to -30°C and the EUT was stabilized for three hours. Power was applied and the maximum change in frequency was recorded within one minute.
3. With power OFF, the temperature was raised in 10°C step up to 50°C. The EUT was stabilized at each step for at least half an hour. Power was applied and the maximum frequency change was recorded within one minute.

3.6.4 Test Procedures for Voltage Variation

1. The EUT was placed in a temperature chamber at 25±5° C and connected with the base station.
2. The power supply voltage to the EUT was varied from BEP to 115% of the nominal value measured at the input to the EUT.
3. The variation in frequency was measured for the worst case.

3.6.5 Test Setup

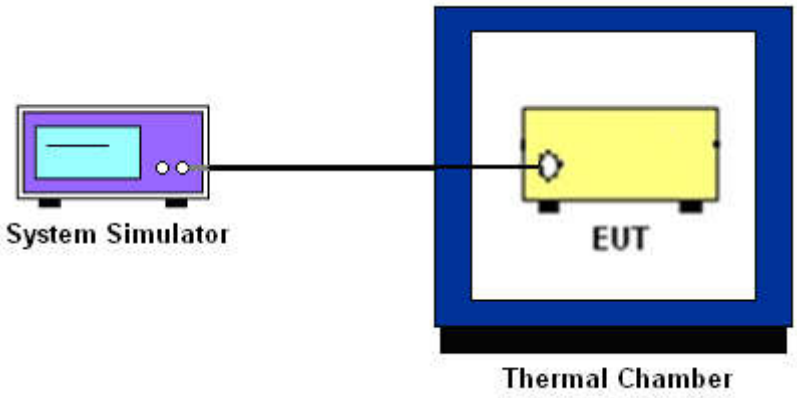

3.6.6 Test Result of Temperature Variation

Test Conditions	Middle Channel	CDMA BC10 (1xRTT)	Limit 2.5ppm
Temperature (°C)	Voltage (Volt)	Deviation (ppm)	Result
50	Normal Voltage	0.0183	PASS
40	Normal Voltage	0.0073	
30	Normal Voltage	0.0280	
20(Ref.)	Normal Voltage	0.0000	
10	Normal Voltage	0.0024	
0	Normal Voltage	0.0049	
-10	Normal Voltage	0.0061	
-20	Normal Voltage	0.0171	
-30	Normal Voltage	0.0085	
20	Maximum Voltage	0.0232	
20	Normal Voltage	0.0012	
20	Battery End Point	0.0037	

Note: Normal Voltage = 3.85V. ；Battery End Point (BEP) = 3.7 V.；Maximum Voltage =4.4 V

4 List of Measuring Equipment

Instrument	Manufacturer	Model No.	Serial No.	Characteristics	Calibration Date	Test Date	Due Date	Remark
Spectrum Analyzer	R&S	FSV40	101040	10Hz~40GHz	Aug. 08, 2017	Mar. 27, 2018	Aug. 07, 2018	Conducted (TH01-KS)
Radio communication analyzer	Anritsu	MT8820C	6201300652	2G/3G/LTE_ full band	Aug. 08, 2017	Mar. 27, 2018	Aug. 07, 2018	Conducted (TH01-KS)
Thermal Chamber	Ten Billion	TTC-B3S	TBN-960502	-40~+150°C	Oct. 12, 2017	Mar. 27, 2018	Oct. 11, 2018	Conducted (TH01-KS)
EXA Spectrum Analyzer	Keysight	N9010A	MY55150244	10Hz-44GHz	Apr. 18, 2017	Mar. 30, 2018	Apr. 17, 2018	Radiation (03CH03-KS)
Bilog Antenna	TeseQ	CBL6112D	35406	25MHz-2GHz	Apr. 22, 2017	Mar. 30, 2018	Apr. 21, 2018	Radiation (03CH03-KS)
Horn Antenna	Schwarzbeck	BBHA9120D	9120D-1356	1GHz~18GHz	Apr. 22, 2017	Mar. 30, 2018	Apr. 21, 2018	Radiation (03CH03-KS)
Amplifier	com-power	PA-103A	161069	1MHz ~1000MHz / 32 dB	Apr. 18, 2017	Mar. 30, 2018	Apr. 17, 2018	Radiation (03CH03-KS)
high gain Amplifier	MITEQ	AMF-7D-00 101800-30-1	2025788	1Ghz-18Ghz	Apr. 18, 2017	Mar. 30, 2018	Apr. 17, 2018	Radiation (03CH03-KS)
Amplifier	Agilent	8449B	3008A02370	1GHz~26.5GHz	Oct. 12, 2017	Mar. 30, 2018	Oct. 11, 2018	Radiation (03CH03-KS)
AC Power Source	Chroma	61601	F104090004	N/A	NCR	Mar. 30, 2018	NCR	Radiation (03CH03-KS)
Turn Table	ChamPro	EM 1000-T	060762-T	0~360 degree	NCR	Mar. 30, 2018	NCR	Radiation (03CH03-KS)
Antenna Mast	ChamPro	EM 1000-A	060762-A	1 m~4 m	NCR	Mar. 30, 2018	NCR	Radiation (03CH03-KS)

NCR: No Calibration Required

5 Uncertainty of Evaluation

Uncertainty of Radiated Emission Measurement (30 MHz ~ 1000 MHz)

Measuring Uncertainty for a Level of Confidence of 95% (U = 2Uc(y))	2.8dB

Uncertainty of Radiated Emission Measurement (1GHz ~ 18GHz)

Measuring Uncertainty for a Level of Confidence of 95% (U = 2Uc(y))	3.3dB