# FCC Part 96.47 Test Report

| | | |
|---|---|---|
| **Applicant** | : | **Xiaomi Communications Co., Ltd.** |
| **Equipment** | : | **Mobile Phone** |
| **Brand Name** | : | **Xiaomi** |
| **Model Name** | : | **2405CPX3DG** |
| **FCC ID** | : | **2AFZZPX3DG** |
| **Standard** | : | **FCC Part 96.47** |
| **Test Date(s)** | : | **May. 09, 2024** |

**We, Sporton International Inc. (Kunshan), would like to declare that the tested sample has been evaluated in accordance with the test procedures and has been in compliance with the applicable technical standards.**

**The test results in this report apply exclusively to the tested model / sample. Without written approval of Sporton International Inc. (Kunshan), the test report shall not be reproduced except in full.**

Jason Jia

**Approved by: Jason Jia**

ACCREDITED
Cert #5145.02

***Sporton International Inc. (Kunshan)***
***No. 1098, Pengxi North Road, Kunshan Economic Development Zone Jiangsu Province 215300 People's Republic of China***

# Table of Contents


**1 GENERAL DESCRIPTION ..... 5**

1.1 APPLICANT ..... 5

1.2 MANUFACTURER ..... 5

1.3 PRODUCT FEATURE OF EQUIPMENT UNDER TEST ..... 5

1.4 PRODUCT SPECIFICATION OF EQUIPMENT UNDER TEST ..... 5

1.5 TESTING LOCATION ..... 6

1.6 TEST SOFTWARE ..... 6

1.7 APPLICABLE STANDARDS ..... 6

**2 TEST CONFIGURATION OF EQUIPMENT UNDER TEST ..... 7**

2.1 CONNECTION DIAGRAM OF TEST SYSTEM ..... 7

**3 END USER DEVICE ADDITIONAL REQUIREMENT ..... 8**

3.1 TEST REQUIREMENT ..... 8

3.2 TEST PROCEDURE ..... 8

3.3 TEST RESULT ..... 9

**4 LIST OF MEASURING EQUIPMENT ..... 11**

**5 MEASUREMENT UNCERTAINTY ..... 12**

**APPENDIX A. TEST SETUP PHOTO**

# History of this test report

| Report No. | Version | Description | Issued Date |
|---|---|---|---|
| FG440220L | 01 | Initial issue of report | Jun. 04, 2024 |
| | | | |
| | | | |
| | | | |
| | | | |
| | | | |
| | | | |
| | | | |
| | | | |
| | | | |
| | | | |
| | | | |
| | | | |
| | | | |
| | | | |

# Summary of Test Result

| Report Clause | Ref Std. Clause | Test Items | Result (PASS/FAIL) | Remark |
|---|---|---|---|---|
| 3 | 96.47 | End User Device additional requirement | Pass | - |

| Conformity Assessment Condition: |
|---|
| 1. The test results (PASS/FAIL) with all measurement uncertainty excluded are presented against the regulation limits or in accordance with the requirements stipulated by the applicant/manufacturer who shall bear all the risks of non-compliance that may potentially occur if measurement uncertainty is taken into account.<br>2. The measurement uncertainty please refer to each test result in the section “Measurement Uncertainty” |
| **Disclaimer:** |
| The product specifications of the EUT presented in the test report that may affect the test assessments are declared by the manufacturer who shall take full responsibility for the authenticity. |

# 1 General Description

## 1.1 Applicant

**Xiaomi Communications Co., Ltd.**
#019, 9th Floor, Building 6, 33 Xi'erqi Middle Road, Haidian District, Beijing, China, 100085

## 1.2 Manufacturer

**Xiaomi Communications Co., Ltd.**
#019, 9th Floor, Building 6, 33 Xi'erqi Middle Road, Haidian District, Beijing, China, 100085

## 1.3 Product Feature of Equipment Under Test

| Product Feature | |
|---|---|
| **Equipment** | Mobile Phone |
| **Brand Name** | Xiaomi |
| **Model Name** | 2405CPX3DG |
| **FCC ID** | 2AFZZPX3DG |
| **IMEI Code** | 866568070020762/866568070020770 |
| **HW Version** | 135100N8 |
| **SW Version** | Xiaomi HyperOS 1.0 |
| **EUT Stage** | Identical Prototype |

**Remark:** The above EUT's information was declared by manufacturer. Please refer to the specifications or user's manual for more detailed description.

## 1.4 Product Specification of Equipment Under Test

| Standards-related Product Specification | |
|---|---|
| **Tx Frequency** | 5G NR n48: 3550 ~ 3700 MHz |
| **Rx Frequency** | 5G NR n48: 3550 ~ 3700 MHz |
| **Antenna Gain** | Open:<br><Ant. 1> LTE Band 48: -3.3 dBi<br><Ant. 6> LTE Band 48: -6.0 dBi<br><Ant. 7> LTE Band 48: -0.15 dBi<br><Ant. 8> LTE Band 48: -2.5 dBi<br>Close:<br><Ant. 1> LTE Band 48: -6.6 dBi<br><Ant. 6> LTE Band 48: -7.1 dBi<br><Ant. 7> LTE Band 48: -1.7 dBi<br><Ant. 8> LTE Band 48: -5.0 dBi |
| **Type of Modulation** | DFT-s-OFDM (PI/2 BPSK / QPSK / 16QAM / 64QAM / 256QAM)<br>CP-OFDM (QPSK / 16QAM / 64QAM / 256QAM) |

## 1.5 Testing Location

Sporton International Inc. (Kunshan) is accredited to ISO/IEC 17025:2017 by American Association for Laboratory Accreditation with Certificate Number 5145.02.

| | | | |
|---|---|---|---|
| **Test Firm** | Sporton International Inc. (Kunshan) | | |
| **Test Site Location** | No. 1098, Pengxi North Road, Kunshan Economic Development Zone<br>Jiangsu Province 215300 People's Republic of China<br>TEL : +86-512-57900158 | | |
| **Test Site No.** | **Sporton Site No.** | **FCC Designation No.** | **FCC Test Firm Registration No.** |
| | DFS01-KS | CN1257 | 314309 |
| **Test Engineer** | Chad Wang | | |
| **Temperature** | 20~ 24.5 ℃ | | |
| **Relative Humidity** | 40~ 60 % | | |

## 1.6 Test Software

| Item | Site | Manufactor | Name | Version |
|---|---|---|---|---|
| 1. | DFS01-KS | Sporton | DFS & Adaptivity Test Tools | 1.0 |

## 1.7 Applicable Standards

- FCC Part 96.47
- FCC KDB 940660 D01 Part 96 CBRS Eqpt v03
- WINNF-TS-0122-V1.0.2 CBRS CBSD Test Specification

**Remark:** All test items were verified and recorded according to the standards and without any deviation during the test.

# 2 Test Configuration of Equipment Under Test

## 2.1 Connection Diagram of Test System

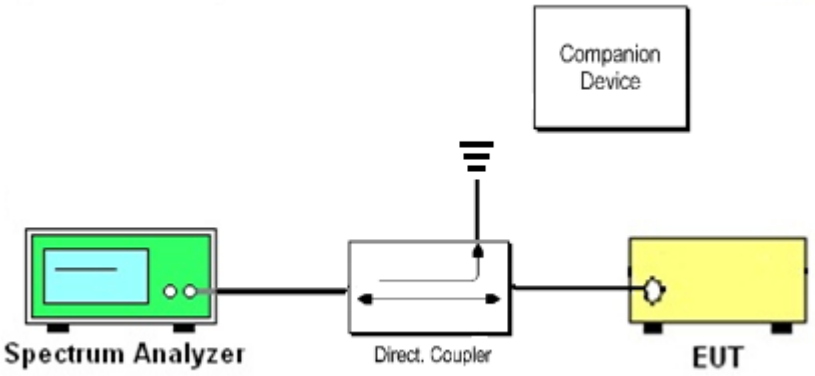


The companion device is certified CBRS (FCC ID: PIDAS2900)

# 3 End User Device additional requirement

## 3.1 Test Requirement

FCC Part 96.47

(a) End User Devices may operate only if they can positively receive and decode an authorization signal transmitted by a CBSD, including the frequencies and power limits for their operation.

(1) An End User Device must discontinue operations, change frequencies, or change its operational power level within 10 seconds of receiving instructions from its associated CBSD.

## 3.2 Test Procedure

Following procedure can be done by applying WINNF-TS-0122-V1.0.2 CBRS CBSD Test Specification, use the certified CBSD (FCC ID: PIDAS2900) as companion device to show compliance with Part 96.47 requirement for End User Device (EUD):

1. Configure SAS granted CBSD to operate at frequency 3600-3620MHz & power level 17dBm/MHz
2. Enable AP service from Ruckus Cloud management
3. Check EUD Tx Frequency and power
4. Disable AP service from Ruckus Cloud management

a. Check EUD stops transmission within 10seconds.

5. Configure SAS granted CBSD to operate at frequency 3670-3690MHz & power level 7dBm/MHz
6. Enable AP service from Ruckus Cloud management
7. Check EUD Tx Frequency and power
8. Disable AP service from Ruckus Cloud management

a. Check EUD stops transmission within 10seconds.

## 3.3 Test Result

[Step 1] Configure SAS granted CBSD to operate at lower frequency & power level 17dBm/MHz

[Step 3] Check EUD Tx Frequency and power

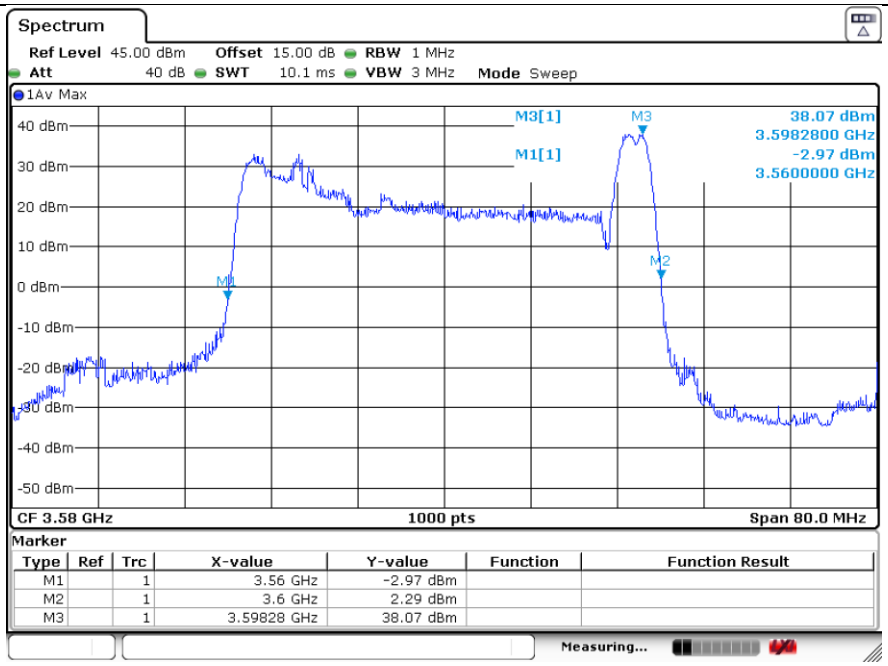


[Step 4.a.] EUD stops transmission within 10 seconds of receiving instructions from its associated CBSD.

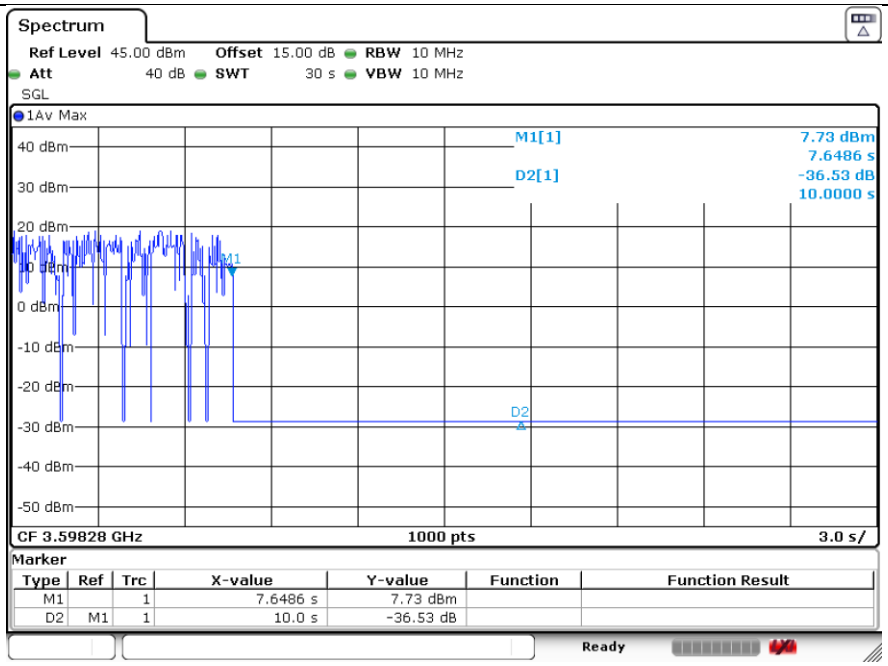

[Step 5] Configure SAS granted CBSD to operate at higher frequency & power level 7dBm/MHz

[Step 7] Check EUD Tx Frequency and power

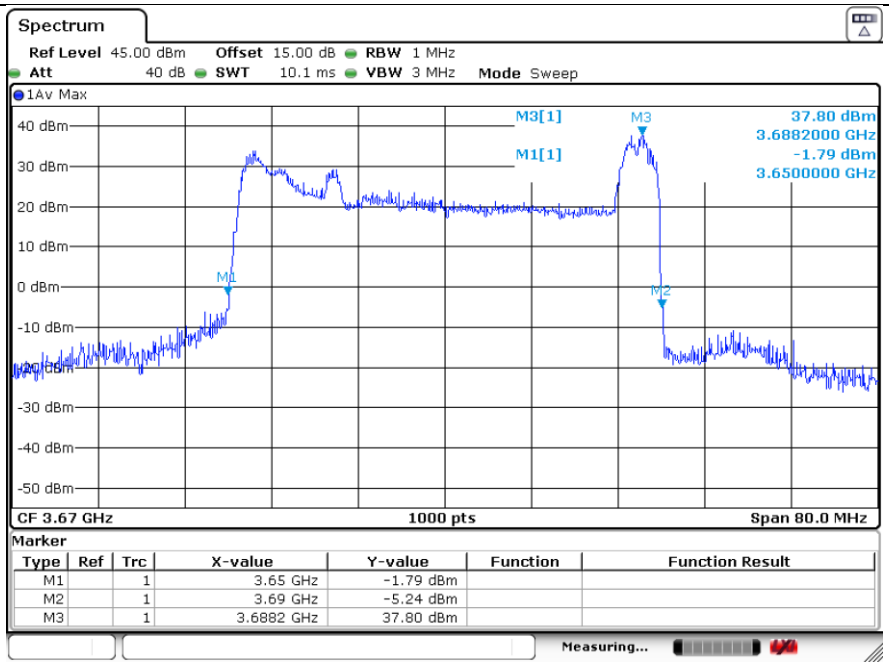


[Step 8.a.] After changing the frequency and power level,

The module (EUT) discontinues operations, change frequencies, or change its operational power level within 10 seconds of receiving instructions from its associated CBSD. Test result is PASS.

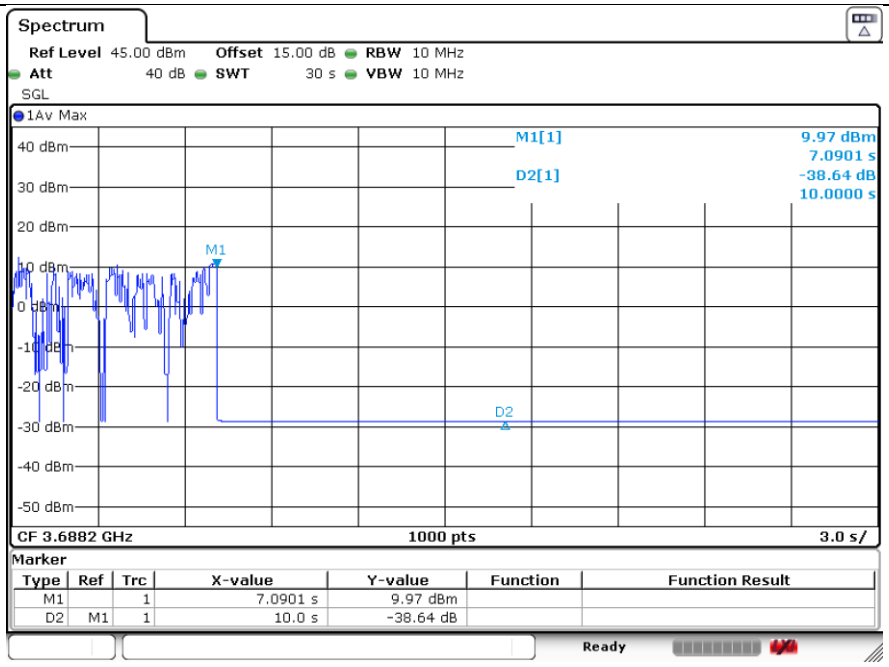

# 4 List of Measuring Equipment

| Instrument | Manufacturer | Model No. | Serial No. | Characteristics | Calibration Date | Test Date | Due Date | Remark |
|---|---|---|---|---|---|---|---|---|
| Signal Analyzer | R&S | FSV7 | 101472 | 10Hz~7GHz | Jan. 05, 2024 | May 09, 2024 | Jan. 04, 2025 | Conducted (DFS01-KS) |
| Combiner | MTJ Cooperation | MTJ7114-M | N/A | 0.5GHz~18GHz | NCR | May 09, 2024 | NCR | Conducted (DFS01-KS) |

# 5 Measurement Uncertainty

The measurement uncertainties shown below were calculated in accordance with the requirements of ANSI 63.10-2013. All the measurement uncertainty value were shown with a coverage K=2 to indicate 95% level of confidence. The measurement data show herein meets or exceeds the CISPR measurement uncertainty values specified in CISPR 16-4-2 and can be compared directly to specified limit to determine compliance.

**Uncertainty of Conducted Measurement**

| | |
|---|---|
| **Conducted Generated signal Levels** | **±0.56 dB** |
| **Conducted Time** | **0.38%** |

**---------- THE END ----------**