SGS-CSTC Standards Technical Services Co., Ltd.
Shenzhen Branch

TEST REPORT

Application No.:	ZEWM2309001432RG
Applicant:	Xiaomi Communications Co., Ltd.
Address of Applicant:	#019, 9th Floor, Building 6, 33 Xi'erqi Middle Road, Haidian District, Beijing, China, 100085
Manufacturer:	Xiaomi Communications Co., Ltd.
Address of Manufacturer:	#019, 9th Floor, Building 6, 33 Xi'erqi Middle Road, Haidian District, Beijing, China, 100085
EUT Description:	Mobile Phone
Model No.:	23113RKC6G
Trade Mark:	POCO
FCC ID:	2AFZZRKC6G
Standards:	47 CFR Part 96.47
Date of Receipt:	2023/09/25
Date of Test:	2023/10/24 to 2023/10/24
Date of Issue:	2023/11/03
Test Result :	**PASS ***

* In the configuration tested, the EUT detailed in this report complied with the standards specified above.

Authorized Signature:

Keny Xu
Laboratory Manager

Unless otherwise agreed in writing, this document is issued by the Company subject to its General Conditions of Service printed overleaf, available on request or accessible at https://www.sgs.com/en/Terms-and-Conditions. Attention is drawn to the limitation of liability, indemnification and jurisdiction issues defined therein. Any holder of this document is advised that information contained hereon reflects the Company's findings at the time of its intervention only and within the limits of Client's instructions, if any. The Company's sole responsibility is to its Client and this document does not exonerate parties to a transaction from exercising all their rights and obligations under the transaction documents. This document cannot be reproduced except in full, without prior written approval of the Company. Any unauthorized alteration, forgery or falsification of the content or appearance of this document is unlawful and offenders may be prosecuted to the fullest extent of the law. Unless otherwise stated the results shown in this test report refer only to the sample(s) tested and such sample(s) are retained for 30 days only.
Attention: To check the authenticity of testing /inspection report & certificate, please contact us at telephone: (86-755) 8307 1443, or email: CN.Doccheck@sgs.com

No.1 Workshop, M-10, Middle Section, Science & Technology Park, Nanshan District, Shenzhen, Guangdong, China 518057 t (86-755) 26012053 www.sgsgroup.com.cn
中国・广东・深圳市南山区科技园中区M-10栋1号厂房 邮编: 518057 t (86-755) 26012053 sgs.china@sgs.com

1 Version

Revision Record				
Version	***Chapter***	***Date***	***Modifier***	***Remark***
01		2023/11/03		Original

Prepared By	Jack Huang **(Jack Huang) / Test Engineer**
Checked By	Flora Wang **(Flora Wang) / Reviewer**

Unless otherwise agreed in writing, this document is issued by the Company subject to its General Conditions of Service printed overleaf, available on request or accessible at https://www.sgs.com/en/Terms-and-Conditions. Attention is drawn to the limitation of liability, indemnification and jurisdiction issues defined therein. Any holder of this document is advised that information contained hereon reflects the Company's findings at the time of its intervention only and within the limits of Client's instructions, if any. The Company's sole responsibility is to its Client and this document does not exonerate parties to a transaction from exercising all their rights and obligations under the transaction documents. This document cannot be reproduced except in full, without prior written approval of the Company. Any unauthorized alteration, forgery or falsification of the content or appearance of this document is unlawful and offenders may be prosecuted to the fullest extent of the law. Unless otherwise stated the results shown in this test report refer only to the sample(s) tested and such sample(s) are retained for 30 days only.
Attention: To check the authenticity of testing /inspection report & certificate, please contact us at telephone: (86-755) 8307 1443, or email: CN.Doccheck@sgs.com

No.1 Workshop, M-10, Middle Section, Science & Technology Park, Nanshan District, Shenzhen, Guangdong, China 518057 t (86-755) 26012053 www.sgsgroup.com.cn
中国・广东・深圳市南山区科技园中区M-10栋1号厂房 邮编: 518057 t (86-755) 26012053 sgs.china@sgs.com

Contents

1 Version 2
2 Test Summary 4
3 General Information 5
3.1 Details of Client 5
3.2 Test Location 5
3.3 Test Facility 5
3.4 General Description of EUT 6
3.5 Test Environment 7
3.6 Description of Support Units 7
4 Description of Tests 8
4.1 End User Device additional requiement 8
5 Main Test Instruments 11
6 Measurement Uncertainty 12
7 Appendixes 13

Unless otherwise agreed in writing, this document is issued by the Company subject to its General Conditions of Service printed overleaf, available on request or accessible at https://www.sgs.com/en/Terms-and-Conditions. Attention is drawn to the limitation of liability, indemnification and jurisdiction issues defined therein. Any holder of this document is advised that information contained hereon reflects the Company's findings at the time of its intervention only and within the limits of Client's instructions, if any. The Company's sole responsibility is to its Client and this document does not exonerate parties to a transaction from exercising all their rights and obligations under the transaction documents. This document cannot be reproduced except in full, without prior written approval of the Company. Any unauthorized alteration, forgery or falsification of the content or appearance of this document is unlawful and offenders may be prosecuted to the fullest extent of the law. Unless otherwise stated the results shown in this test report refer only to the sample(s) tested and such sample(s) are retained for 30 days only.
Attention: To check the authenticity of testing /inspection report & certificate, please contact us at telephone: (86-755) 8307 1443, or email: CN.Doccheck@sgs.com

No.1 Workshop, M-10, Middle Section, Science & Technology Park, Nanshan District, Shenzhen, Guangdong, China 518057 t (86-755) 26012053 www.sgsgroup.com.cn
中国・广东・深圳市南山区科技园中区M-10栋1号厂房 邮编: 518057 t (86-755) 26012053 sgs.china@sgs.com

2 Test Summary

Test Item	FCC Rule No.	Test Result	Verdict
End User Device additional requiement	§96.47	Clause 4.1	Pass

Unless otherwise agreed in writing, this document is issued by the Company subject to its General Conditions of Service printed overleaf, available on request or accessible at https://www.sgs.com/en/Terms-and-Conditions. Attention is drawn to the limitation of liability, indemnification and jurisdiction issues defined therein. Any holder of this document is advised that information contained hereon reflects the Company's findings at the time of its intervention only and within the limits of Client's instructions, if any. The Company's sole responsibility is to its Client and this document does not exonerate parties to a transaction from exercising all their rights and obligations under the transaction documents. This document cannot be reproduced except in full, without prior written approval of the Company. Any unauthorized alteration, forgery or falsification of the content or appearance of this document is unlawful and offenders may be prosecuted to the fullest extent of the law. Unless otherwise stated the results shown in this test report refer only to the sample(s) tested and such sample(s) are retained for 30 days only.
Attention: To check the authenticity of testing /inspection report & certificate, please contact us at telephone: (86-755) 8307 1443, or email: CN.Doccheck@sgs.com

No.1 Workshop, M-10, Middle Section, Science & Technology Park, Nanshan District, Shenzhen, Guangdong, China 518057 t (86-755) 26012053 www.sgsgroup.com.cn
中国・广东・深圳市南山区科技园中区M-10栋1号厂房 邮编: 518057 t (86-755) 26012053 sgs.china@sgs.com

3 General Information

3.1 Details of Client

Applicant:	Xiaomi Communications Co., Ltd.
Address of Applicant:	#019, 9th Floor, Building 6, 33 Xi'erqi Middle Road, Haidian District, Beijing, China, 100085
Manufacturer:	Xiaomi Communications Co., Ltd.
Address of Manufacturer:	#019, 9th Floor, Building 6, 33 Xi'erqi Middle Road, Haidian District, Beijing, China, 100085

3.2 Test Location

Company:	SGS-CSTC Standards Technical Services Co., Ltd. Shenzhen Branch
Address:	No. 1 Workshop, M-10, Middle section, Science & Technology Park, Nanshan District, Shenzhen, Guangdong, China
Post code:	518057
Test engineer:	JinHua Wei

3.3 Test Facility

The test facility is recognized, certified, or accredited by the following organizations:

- **A2LA (Certificate No. 3816.01)**

SGS-CSTC Standards Technical Services Co., Ltd. Shenzhen Branch is accredited by the American Association for Laboratory Accreditation(A2LA). Certificate No. 3816.01.

- **VCCI**

The 3m Fully-anechoic chamber for above 1GHz, 10m Semi-anechoic chamber for below 1GHz, Shielded Room for Mains Port Conducted Interference Measurement and Telecommunication Port Conducted Interference Measurement of SGS-CSTC Standards Technical Services Co., Ltd. have been registered in accordance with the Regulations for Voluntary Control Measures with Registration No.: G-20026, R-14188, C-12383 and T-11153 respectively.

- **Innovation, Science and Economic Development Canada**

SGS-CSTC Standards Technical Services Co., Ltd. Shenzhen Branch has been recognized by ISED as an accredited testing laboratory.

CAB identifier: CN0006.

IC#: 4620C.

- **FCC –Designation Number: CN1336**

SGS-CSTC Standards Technical Services Co., Ltd. Shenzhen Branch has been recognized as an accredited testing laboratory.

Designation Number: CN1336.

Test Firm Registration Number: 787754

Unless otherwise agreed in writing, this document is issued by the Company subject to its General Conditions of Service printed overleaf, available on request or accessible at https://www.sgs.com/en/Terms-and-Conditions. Attention is drawn to the limitation of liability, indemnification and jurisdiction issues defined therein. Any holder of this document is advised that information contained hereon reflects the Company's findings at the time of its intervention only and within the limits of Client's instructions, if any. The Company's sole responsibility is to its Client and this document does not exonerate parties to a transaction from exercising all their rights and obligations under the transaction documents. This document cannot be reproduced except in full, without prior written approval of the Company. Any unauthorized alteration, forgery or falsification of the content or appearance of this document is unlawful and offenders may be prosecuted to the fullest extent of the law. Unless otherwise stated the results shown in this test report refer only to the sample(s) tested and such sample(s) are retained for 30 days only.
Attention: To check the authenticity of testing /inspection report & certificate, please contact us at telephone: (86-755) 8307 1443, or email: CN.Doccheck@sgs.com

No.1 Workshop, M-10, Middle Section, Science & Technology Park, Nanshan District, Shenzhen, Guangdong, China 518057 t (86-755) 26012053 www.sgsgroup.com.cn
中国・广东・深圳市南山区科技园中区M-10栋1号厂房 邮编: 518057 t (86-755) 26012053 sgs.china@sgs.com

3.4 General Description of EUT

EUT Description:	Mobile Phone
Model No.:	23113RKC6G
Trade Mark:	POCO
Hardware Version:	13510N11
Software Version:	Xiaomi HyperOS 1.0
Power Supply:	Lithium Battery (3.89V)
IMEI:	IMEI1:867826060014909 IMEI2:867826060014917
Antenna Type:	PIFA Antenna
Transmitter Frequnecy Band:	LTE Band 48
Transmitter Frequnecy Range:	3550 to 3700 MHz
Antenna Gain:	LTE Band 48: -3dBi(Ant6); -2.5dBi(Ant7); -3.4dBi(Ant8); -3.8dBi(Ant9);
	Note: The antenna gain are derived from the gain information report provided by the manufacturer.
Remark: As above information is provided and confirmed by the applicant. SGS is not liable to the accuracy, suitability, reliability or/and integrity of the information.	

Unless otherwise agreed in writing, this document is issued by the Company subject to its General Conditions of Service printed overleaf, available on request or accessible at https://www.sgs.com/en/Terms-and-Conditions. Attention is drawn to the limitation of liability, indemnification and jurisdiction issues defined therein. Any holder of this document is advised that information contained hereon reflects the Company's findings at the time of its intervention only and within the limits of Client's instructions, if any. The Company's sole responsibility is to its Client and this document does not exonerate parties to a transaction from exercising all their rights and obligations under the transaction documents. This document cannot be reproduced except in full, without prior written approval of the Company. Any unauthorized alteration, forgery or falsification of the content or appearance of this document is unlawful and offenders may be prosecuted to the fullest extent of the law. Unless otherwise stated the results shown in this test report refer only to the sample(s) tested and such sample(s) are retained for 30 days only.
Attention: To check the authenticity of testing /inspection report & certificate, please contact us at telephone: (86-755) 8307 1443, or email: CN.Doccheck@sgs.com

No.1 Workshop, M-10, Middle Section, Science & Technology Park, Nanshan District, Shenzhen, Guangdong, China 518057 t (86-755) 26012053 www.sgsgroup.com.cn
中国・广东・深圳市南山区科技园中区M-10栋1号厂房 邮编: 518057 t (86-755) 26012053 sgs.china@sgs.com

3.5 Test Environment

Environment Parameter	101.0 kPa Selected Values During Tests	
Relative Humidity	44-60 % RH Ambient	
Value	**Temperature(℃)**	**Voltage(V)**
NTNV	22~25	3.89
Remark: NV: Normal Voltage NT: Normal Temperature		

3.6 Description of Support Units

Description	Manufacturer	Model No.
LTE Base Station	Baicells Technologies Co.,Ltd.	mBS31001 (FCC ID: 2AG32MBS3100196N)

Unless otherwise agreed in writing, this document is issued by the Company subject to its General Conditions of Service printed overleaf, available on request or accessible at https://www.sgs.com/en/Terms-and-Conditions. Attention is drawn to the limitation of liability, indemnification and jurisdiction issues defined therein. Any holder of this document is advised that information contained hereon reflects the Company's findings at the time of its intervention only and within the limits of Client's instructions, if any. The Company's sole responsibility is to its Client and this document does not exonerate parties to a transaction from exercising all their rights and obligations under the transaction documents. This document cannot be reproduced except in full, without prior written approval of the Company. Any unauthorized alteration, forgery or falsification of the content or appearance of this document is unlawful and offenders may be prosecuted to the fullest extent of the law. Unless otherwise stated the results shown in this test report refer only to the sample(s) tested and such sample(s) are retained for 30 days only.
Attention: To check the authenticity of testing /inspection report & certificate, please contact us at telephone: (86-755) 8307 1443, or email: CN.Doccheck@sgs.com

No.1 Workshop, M-10, Middle Section, Science & Technology Park, Nanshan District, Shenzhen, Guangdong, China 518057 t (86-755) 26012053 www.sgsgroup.com.cn
中国・广东・深圳市南山区科技园中区M-10栋1号厂房 邮编: 518057 t (86-755) 26012053 sgs.china@sgs.com

4 Description of Tests

4.1 End User Device additional requiement

Test Requirement:	FCC Part 96.47
Test Method:	WINNF-18-IN-00178 CBRS End User Devices as UUT Test Guidelines
Requirement:	(a)End User Devices may operate only if they can positively receive and decode anauthorization signal transmitted by a CBSD, including the frequencies and power limits fortheir operation. (1)An End User Device must discontinue operations, change frequencies, or changeits operational power level within 10 seconds of receiving instructions from its associated CBSD.
Test Procedure:	1. Setup with frequency 3550-3570MHz and power level 20dBm/MHz 2. Enable AP service from Ruckus Cloud management 3. Check EUD Tx Frequency and power 4. Disable AP service from Ruckus Cloud management 5. Check EUD stops transmission within 10seconds. 6. Setup with 3590-3610MHz & power level 8dBm/MHz 7. Enable AP service from Ruckus Cloud management 8. Check EUD Tx Frequency and power 9. Disable AP service from Ruckus Cloud management 10. Check EUD stops transmission within 10seconds.
Test setup:	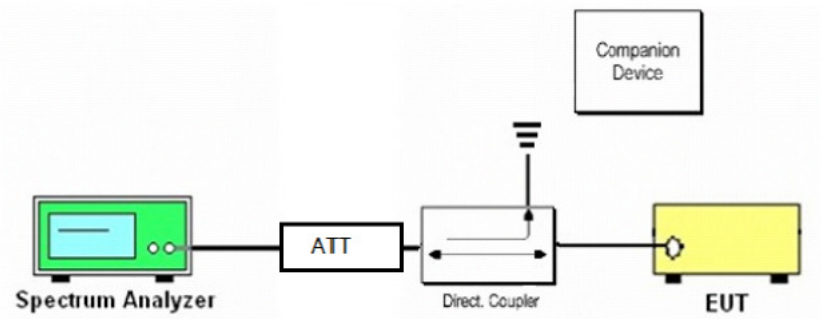

Unless otherwise agreed in writing, this document is issued by the Company subject to its General Conditions of Service printed overleaf, available on request or accessible at https://www.sgs.com/en/Terms-and-Conditions. Attention is drawn to the limitation of liability, indemnification and jurisdiction issues defined therein. Any holder of this document is advised that information contained hereon reflects the Company's findings at the time of its intervention only and within the limits of Client's instructions, if any. The Company's sole responsibility is to its Client and this document does not exonerate parties to a transaction from exercising all their rights and obligations under the transaction documents. This document cannot be reproduced except in full, without prior written approval of the Company. Any unauthorized alteration, forgery or falsification of the content or appearance of this document is unlawful and offenders may be prosecuted to the fullest extent of the law. Unless otherwise stated the results shown in this test report refer only to the sample(s) tested and such sample(s) are retained for 30 days only.
Attention: To check the authenticity of testing /inspection report & certificate, please contact us at telephone: (86-755) 8307 1443, or email: CN.Doccheck@sgs.com

No.1 Workshop, M-10, Middle Section, Science & Technology Park, Nanshan District, Shenzhen, Guangdong, China 518057 t (86-755) 26012053 www.sgsgroup.com.cn
中国・广东・深圳市南山区科技园中区M-10栋1号厂房 邮编: 518057 t (86-755) 26012053 sgs.china@sgs.com

SGS-CSTC Standards Technical Services Co., Ltd.
Shenzhen Branch

[Step 1] Setup with frequency 3550-3570MHz and power level 20dBm/MHz

[Step 3] Check EUD Tx Frequency and power

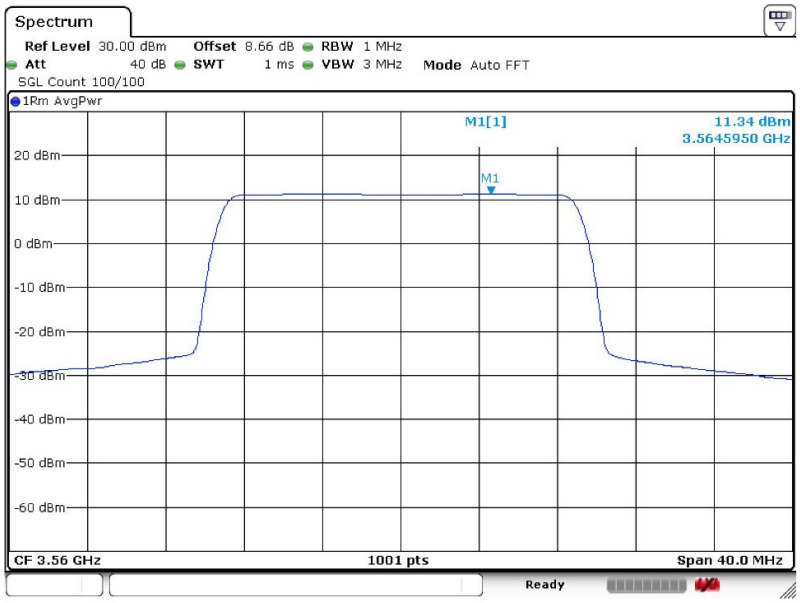

Date: 24.OCT.2023 15:35:59

EIRP PSD=11.34-2.5+1.1=9.94dBm/MHz, Antenna gain is -2.5dBi, the pass loss is 1.1dB

[Step 5] EUD stops transmission within 10 seconds of receiving instructions from its associated CBSD.

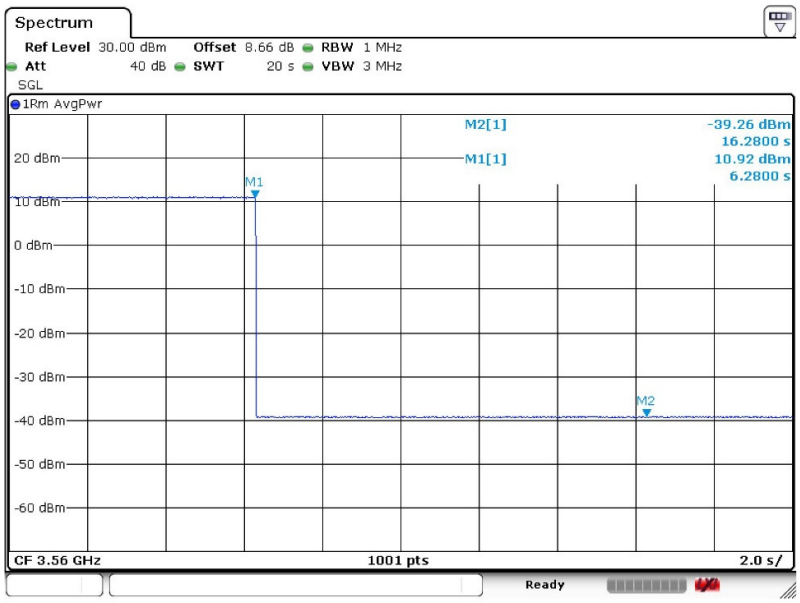

Date: 24.OCT.2023 15:18:28

Unless otherwise agreed in writing, this document is issued by the Company subject to its General Conditions of Service printed overleaf, available on request or accessible at https://www.sgs.com/en/Terms-and-Conditions. Attention is drawn to the limitation of liability, indemnification and jurisdiction issues defined therein. Any holder of this document is advised that information contained hereon reflects the Company's findings at the time of its intervention only and within the limits of Client's instructions, if any. The Company's sole responsibility is to its Client and this document does not exonerate parties to a transaction from exercising all their rights and obligations under the transaction documents. This document cannot be reproduced except in full, without prior written approval of the Company. Any unauthorized alteration, forgery or falsification of the content or appearance of this document is unlawful and offenders may be prosecuted to the fullest extent of the law. Unless otherwise stated the results shown in this test report refer only to the sample(s) tested and such sample(s) are retained for 30 days only.
Attention: To check the authenticity of testing /inspection report & certificate, please contact us at telephone: (86-755) 8307 1443, or email: CN.Doccheck@sgs.com

No.1 Workshop, M-10, Middle Section, Science & Technology Park, Nanshan District, Shenzhen, Guangdong, China 518057 t (86-755) 26012053 www.sgsgroup.com.cn
中国・广东・深圳市南山区科技园中区M-10栋1号厂房 邮编: 518057 t (86-755) 26012053 sgs.china@sgs.com

[Step 6] Setup with 3590-3610MHz & power level 8dBm/MHz

[Step 8] Check EUD Tx Frequency and power

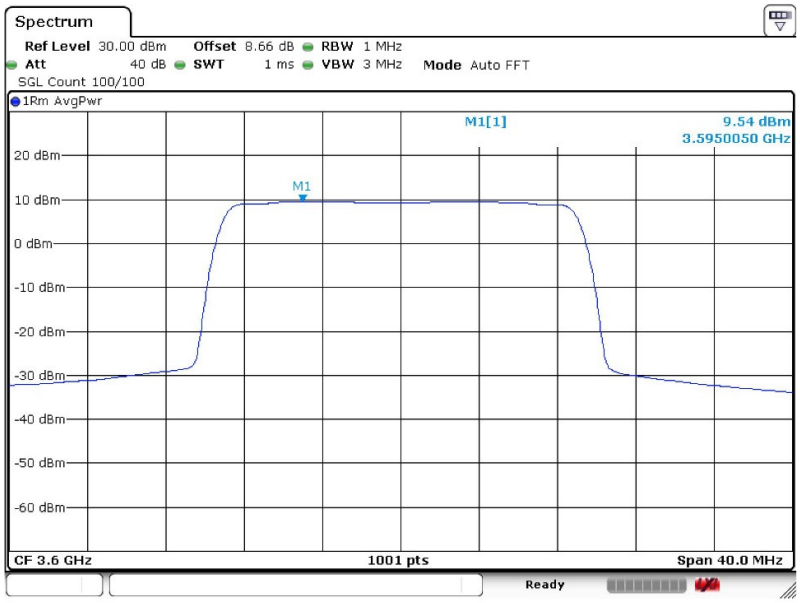

Date: 24.OCT.2023 15:33:14

EIRP PSD=9.54-2.5+1.1=8.14dBm/MHz, Antenna gain is -2.5dBi, the pass loss is 1.1dB

[Step 10] EUD stops transmission within 10 seconds of receiving instructions from its associated CBSD.

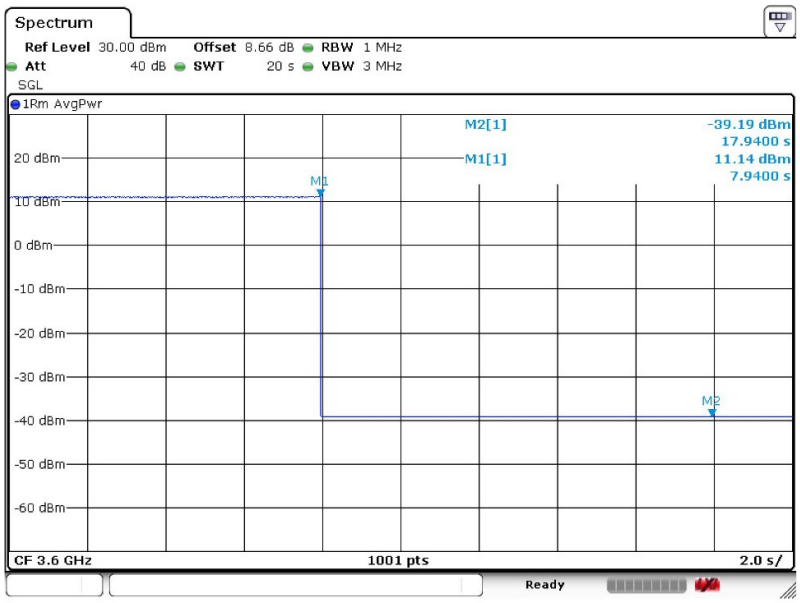

Date: 24.OCT.2023 15:21:37

Unless otherwise agreed in writing, this document is issued by the Company subject to its General Conditions of Service printed overleaf, available on request or accessible at https://www.sgs.com/en/Terms-and-Conditions. Attention is drawn to the limitation of liability, indemnification and jurisdiction issues defined therein. Any holder of this document is advised that information contained hereon reflects the Company's findings at the time of its intervention only and within the limits of Client's instructions, if any. The Company's sole responsibility is to its Client and this document does not exonerate parties to a transaction from exercising all their rights and obligations under the transaction documents. This document cannot be reproduced except in full, without prior written approval of the Company. Any unauthorized alteration, forgery or falsification of the content or appearance of this document is unlawful and offenders may be prosecuted to the fullest extent of the law. Unless otherwise stated the results shown in this test report refer only to the sample(s) tested and such sample(s) are retained for 30 days only.
Attention: To check the authenticity of testing /inspection report & certificate, please contact us at telephone: (86-755) 8307 1443, or email: CN.Doccheck@sgs.com

No.1 Workshop, M-10, Middle Section, Science & Technology Park, Nanshan District, Shenzhen, Guangdong, China 518057 t (86-755) 26012053 www.sgsgroup.com.cn
中国・广东・深圳市南山区科技园中区M-10栋1号厂房 邮编: 518057 t (86-755) 26012053 sgs.china@sgs.com

5 Main Test Instruments

RF conducted test					
Test Equipment	**Manufacturer**	**Model No.**	**Inventory No.**	**Cal. date (yyyy/mm/dd)**	**Cal.Due date (yyyy/mm/dd)**
Humidity/ Temperature Indicator	Shanghai Meteorological Industry Factory	HTC-1	SZ-WRG-M-032	2023/02/17	2024/02/16
Spectrum Analyzer	Rohde & Schwarz	FSV	SZ-WRG-M-012	2023/02/16	2024/02/15

Unless otherwise agreed in writing, this document is issued by the Company subject to its General Conditions of Service printed overleaf, available on request or accessible at https://www.sgs.com/en/Terms-and-Conditions. Attention is drawn to the limitation of liability, indemnification and jurisdiction issues defined therein. Any holder of this document is advised that information contained hereon reflects the Company's findings at the time of its intervention only and within the limits of Client's instructions, if any. The Company's sole responsibility is to its Client and this document does not exonerate parties to a transaction from exercising all their rights and obligations under the transaction documents. This document cannot be reproduced except in full, without prior written approval of the Company. Any unauthorized alteration, forgery or falsification of the content or appearance of this document is unlawful and offenders may be prosecuted to the fullest extent of the law. Unless otherwise stated the results shown in this test report refer only to the sample(s) tested and such sample(s) are retained for 30 days only.
Attention: To check the authenticity of testing /inspection report & certificate, please contact us at telephone: (86-755) 8307 1443, or email: CN.Doccheck@sgs.com

No.1 Workshop, M-10, Middle Section, Science & Technology Park, Nanshan District, Shenzhen, Guangdong, China 518057 t (86-755) 26012053 www.sgsgroup.com.cn
中国・广东・深圳市南山区科技园中区M-10栋1号厂房 邮编: 518057 t (86-755) 26012053 sgs.china@sgs.com

6 Measurement Uncertainty

For a 95% confidence level (k = 2), the measurement expanded uncertainties for defined systems, in accordance with the recommendations of ISO 17025 as following:

No.	Item	Measurement Uncertainty
1	Radio Frequency	± 9.84Hz
2	RF conducted power	± 0.42dB

Remark:
The U_{lab} (lab Uncertainty) is less than $U_{cispr/ETSI}$ (CISPR/ETSI Uncertainty), so the test results
– compliance is deemed to occur if no measured disturbance level exceeds the disturbance limit;
– non-compliance is deemed to occur if any measured disturbance level exceeds the disturbance limit.

Unless otherwise agreed in writing, this document is issued by the Company subject to its General Conditions of Service printed overleaf, available on request or accessible at https://www.sgs.com/en/Terms-and-Conditions. Attention is drawn to the limitation of liability, indemnification and jurisdiction issues defined therein. Any holder of this document is advised that information contained hereon reflects the Company's findings at the time of its intervention only and within the limits of Client's instructions, if any. The Company's sole responsibility is to its Client and this document does not exonerate parties to a transaction from exercising all their rights and obligations under the transaction documents. This document cannot be reproduced except in full, without prior written approval of the Company. Any unauthorized alteration, forgery or falsification of the content or appearance of this document is unlawful and offenders may be prosecuted to the fullest extent of the law. Unless otherwise stated the results shown in this test report refer only to the sample(s) tested and such sample(s) are retained for 30 days only.
Attention: To check the authenticity of testing /inspection report & certificate, please contact us at telephone: (86-755) 8307 1443, or email: CN.Doccheck@sgs.com

No.1 Workshop, M-10, Middle Section, Science & Technology Park, Nanshan District, Shenzhen, Guangdong, China 518057 t (86-755) 26012053 www.sgsgroup.com.cn
中国・广东・深圳市南山区科技园中区M-10栋1号厂房 邮编: 518057 t (86-755) 26012053 sgs.china@sgs.com

7 Appendixes

Setup Photos	Appendix A.5 - Setup Photos-part96.47

---End of Report---

Unless otherwise agreed in writing, this document is issued by the Company subject to its General Conditions of Service printed overleaf, available on request or accessible at https://www.sgs.com/en/Terms-and-Conditions. Attention is drawn to the limitation of liability, indemnification and jurisdiction issues defined therein. Any holder of this document is advised that information contained hereon reflects the Company's findings at the time of its intervention only and within the limits of Client's instructions, if any. The Company's sole responsibility is to its Client and this document does not exonerate parties to a transaction from exercising all their rights and obligations under the transaction documents. This document cannot be reproduced except in full, without prior written approval of the Company. Any unauthorized alteration, forgery or falsification of the content or appearance of this document is unlawful and offenders may be prosecuted to the fullest extent of the law. Unless otherwise stated the results shown in this test report refer only to the sample(s) tested and such sample(s) are retained for 30 days only.
Attention: To check the authenticity of testing /inspection report & certificate, please contact us at telephone: (86-755) 8307 1443, or email: CN.Doccheck@sgs.com

No.1 Workshop, M-10, Middle Section, Science & Technology Park, Nanshan District, Shenzhen, Guangdong, China 518057 t (86-755) 26012053 www.sgsgroup.com.cn
中国・广东・深圳市南山区科技园中区M-10栋1号厂房 邮编: 518057 t (86-755) 26012053 sgs.china@sgs.com

Member of the SGS Group (SGS SA)