Mi Drone User Guide

Please read this manual carefully before using

Attention

- This product is only for adults over 18 years old. .
- Fly in open area. Keep enough distance from people, animals, trees, vehicles and buildings etc.
- Be away from the circumstances such as airports, railways, high ways, tall buildings and electric wires etc.
- The flying height, distance and zone are limited by relevant laws and regulations set forth by government.
- All operator should compliance with safety precautions during using this product.

Scan & Install Mi Drone App

Products & Accessories

1. Aircraft

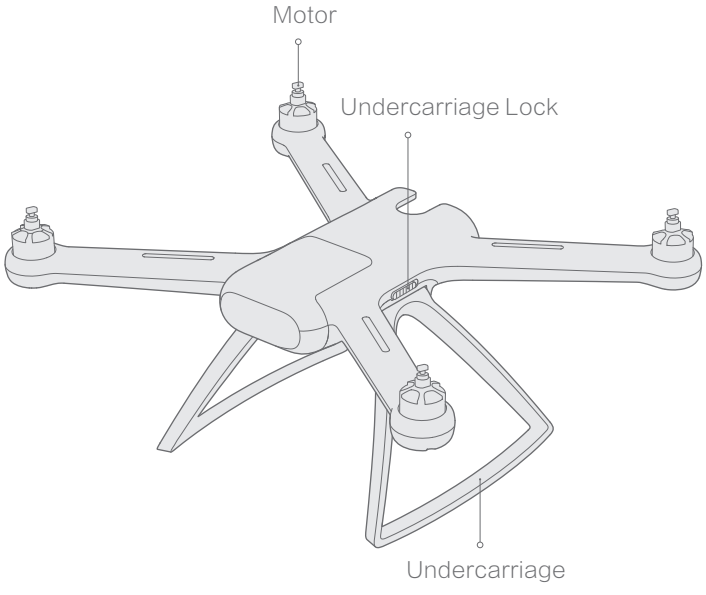

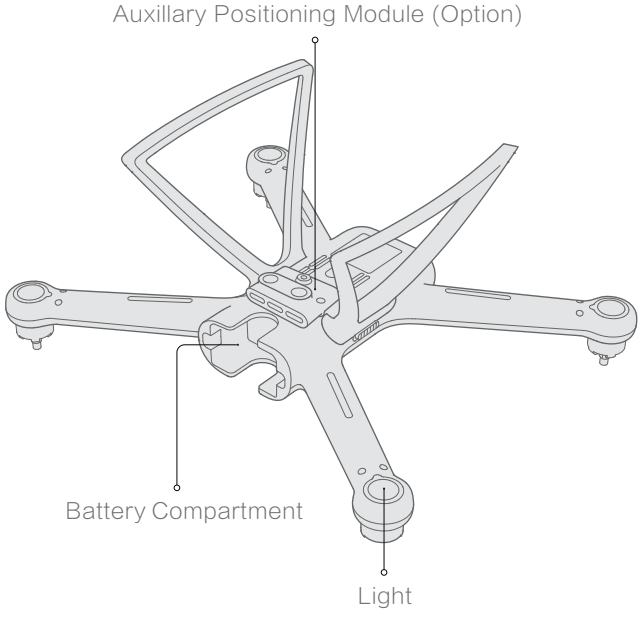

Products & Accessories

2. Radio Controller

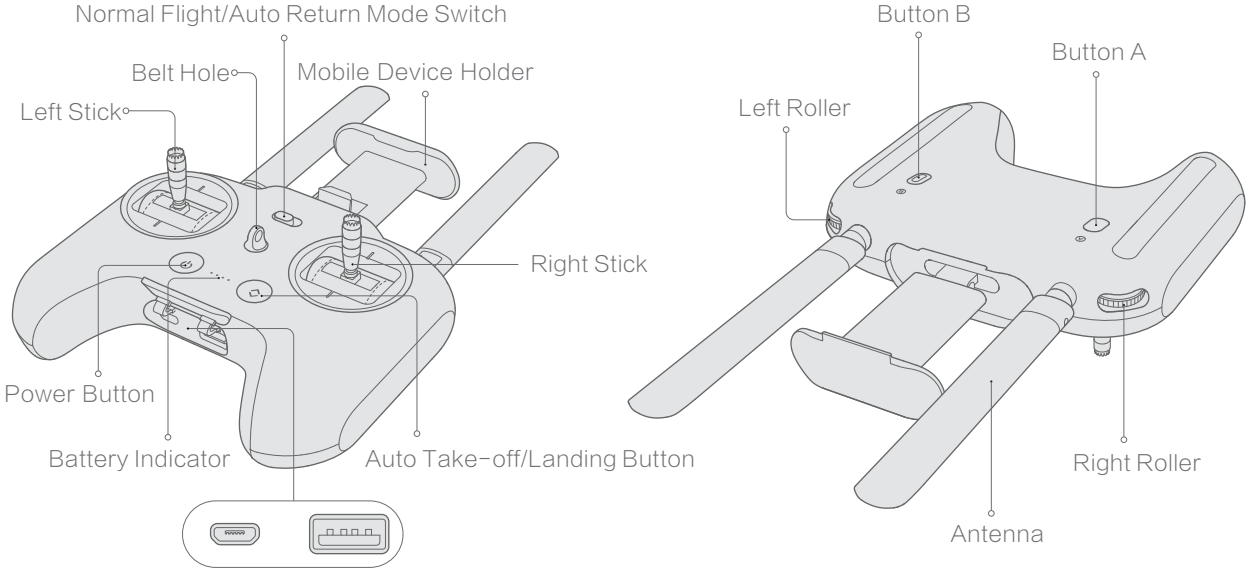

Charging Port USB Port(Connect Radio Controller and mobile device)

Products & Accessories

3. Integraded Gimbal Camera

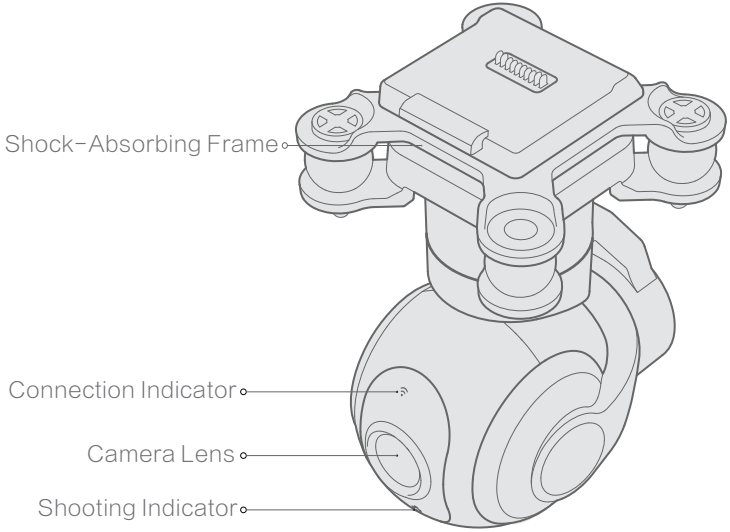

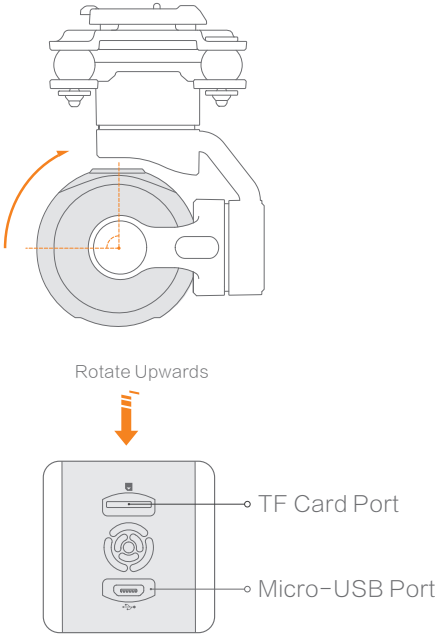

Products & Accessories

4. Accessories for Quadcopter

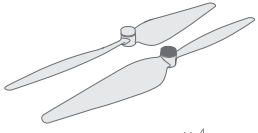

x 4

Quick-detachable Propellers

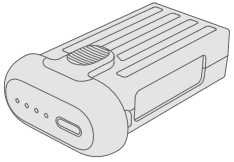

Battery

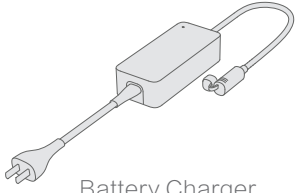

Battery Charger

5. Tool Box

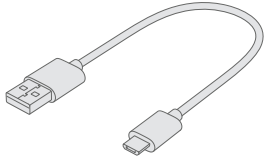

USB Cable

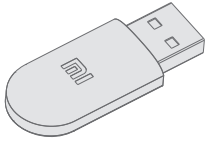

Wireless Adapter

Charging

1. Charge the Battery

- The indicator will be blinking during the charging
- The indicator will be turned off when chariging is completed

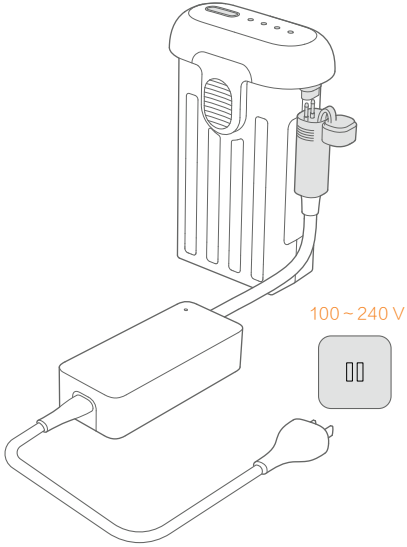

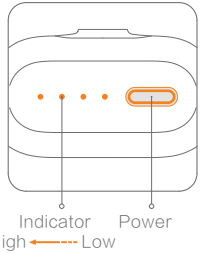

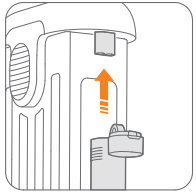

* Both battery ports could be used

2. Charge the Radio Controller

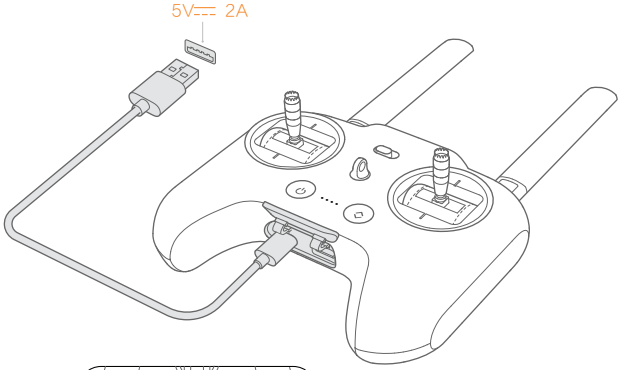

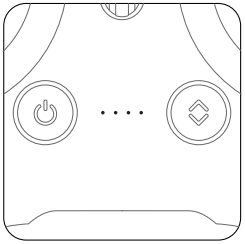

- The indicator will be blinking during the charging
- The indicator will be turned off when chariging is completed

Prepare

1. Prepare the Aircraft

a. Undercarriage

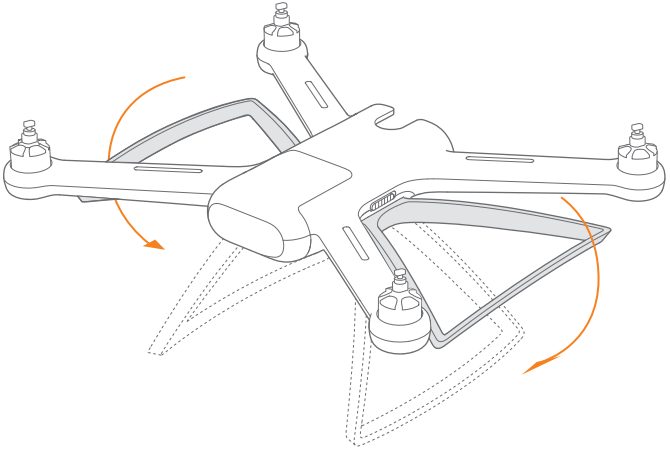

Turn down the undercarriage till hear clicking sound;
Note:
Before flight, the undercarriage MUST be turned down.

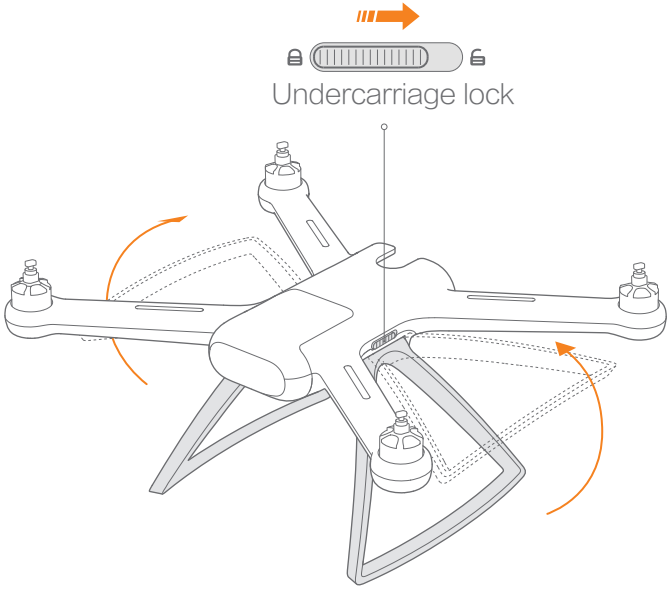

Turn and hold the undercarriage lock to unlock position;
Pull up the undercarriage.

b. Battery

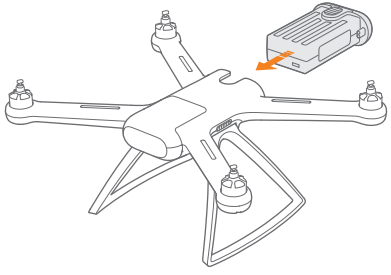

- Push the battery into the battery compartment till hear clicking sound.
- Press the battery assemble switch then can pull out the battery.

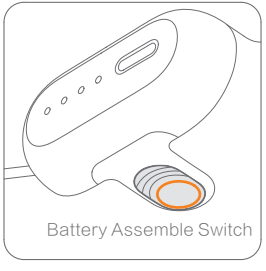

c. Protective Frame

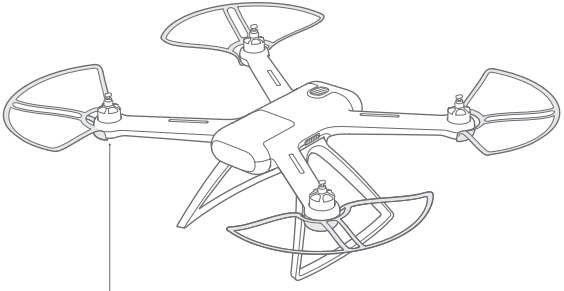

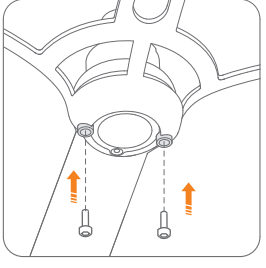

- Please use included screws and driver to assemble propeller frames.
- Two screws are needed on every propeller frame.

d. Propellers

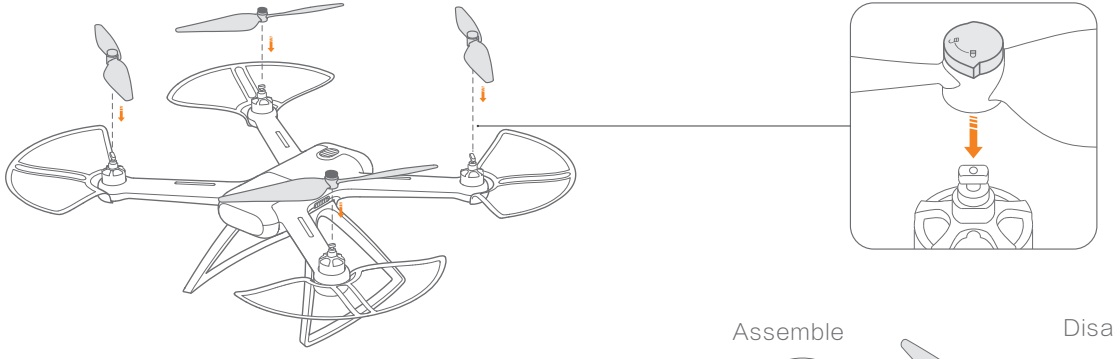

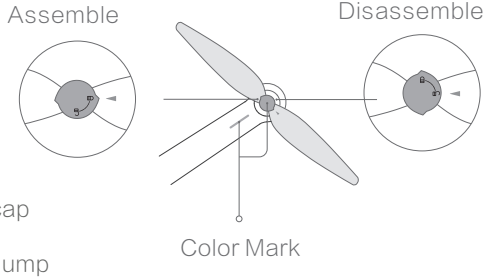

- Check propeller cap is on unlock position
- Put the propellers on the top of motors with same color marks.
- Press the propeller down onto the motor and rotate the propeller cap in the lock direction untill it is secured.
- Rotate the propeller cap in the unlock direction untill the propeller jump up, then propeller can be removed.

Prepare the Gimbal Camera

Insert TF Card

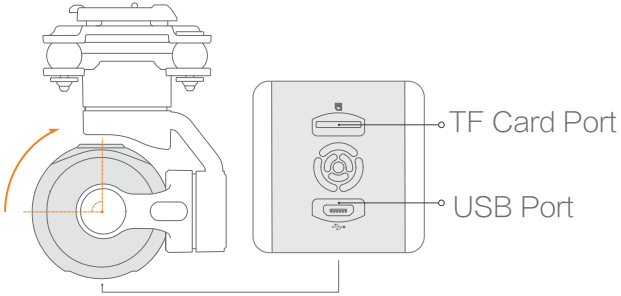

Upwards rotate 90°

· Please choose mainstream band TF cards, Class 10 and 16G at least.

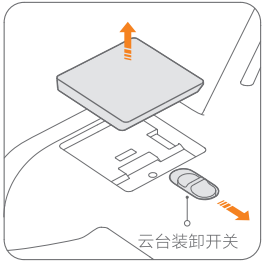

Turn and keep the gimbal switch to unlock position, remove the gimbal cover.

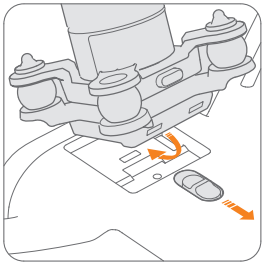

Insert gimbal camera into the cavity with 45° tilt degree, press gimbal camera down firmly till hear click sound.

Prepare the Radio Controller

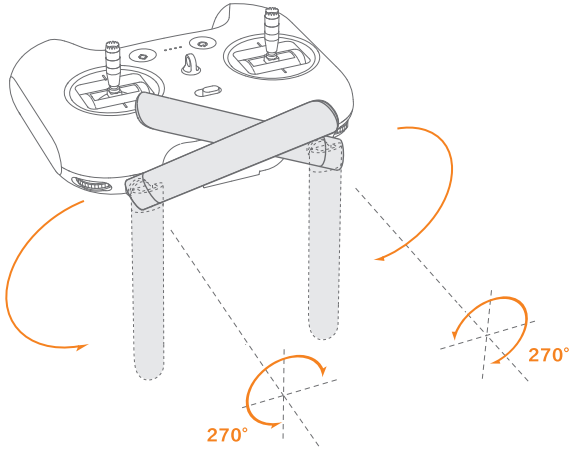

Unfold the antennas as shown figure.

Note:

Please keep the vertical surface of antennas toward aircraft to get the more stable singnal level.

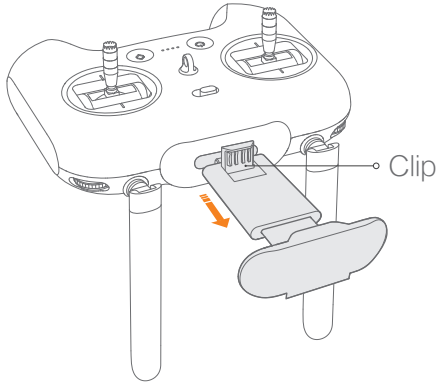

Pull out moble device holder untill the clip pop up.

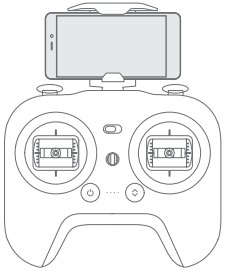

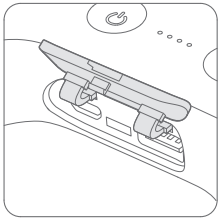

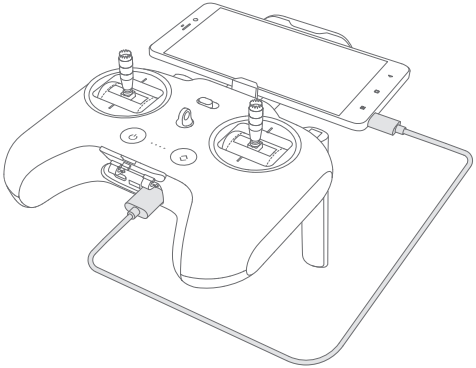

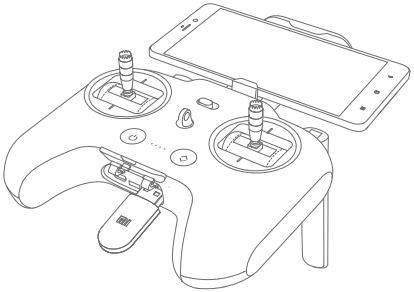

- Place the mobile device on the holder, please beware of the mobile device's power key not be touched.
- Open the cover on the bottom of radio controller
- Connect the radio controller with mobile device by USB cable or wireless adaptor
- Refer to Mi Drone APP instruction to complete connection.

Note:
Due to size limitation, Some mobile device MAY NOT be placed on the holder.

Choose USB cable to connect the radio controller and mobile device

1. Open Mi Drone APP, select “ Next” button

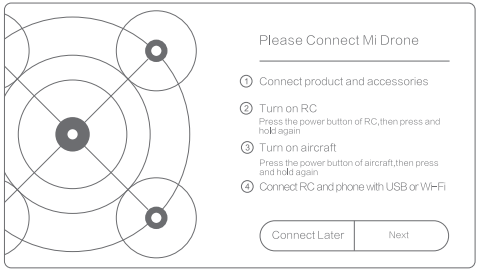

2. Pop up dialog box, select “USB connection”, tap “ OK” button

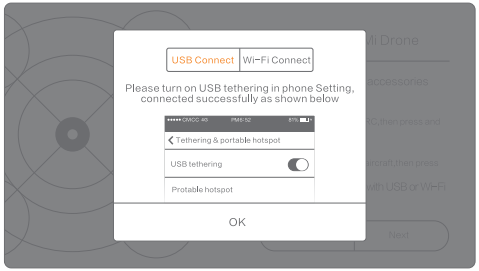

1. Open Mi Drone APP, select “ Next” button

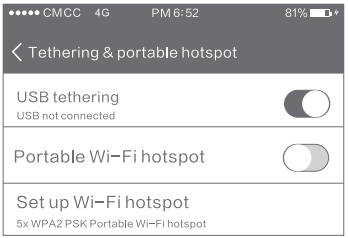

2. Pop up dialog box, select “USB connection”, tap “ OK” button