ActiveStation
" The Office Wellness Solution"

OWNER'S MANUAL

AST1001/ASWD1001/ASWD2001

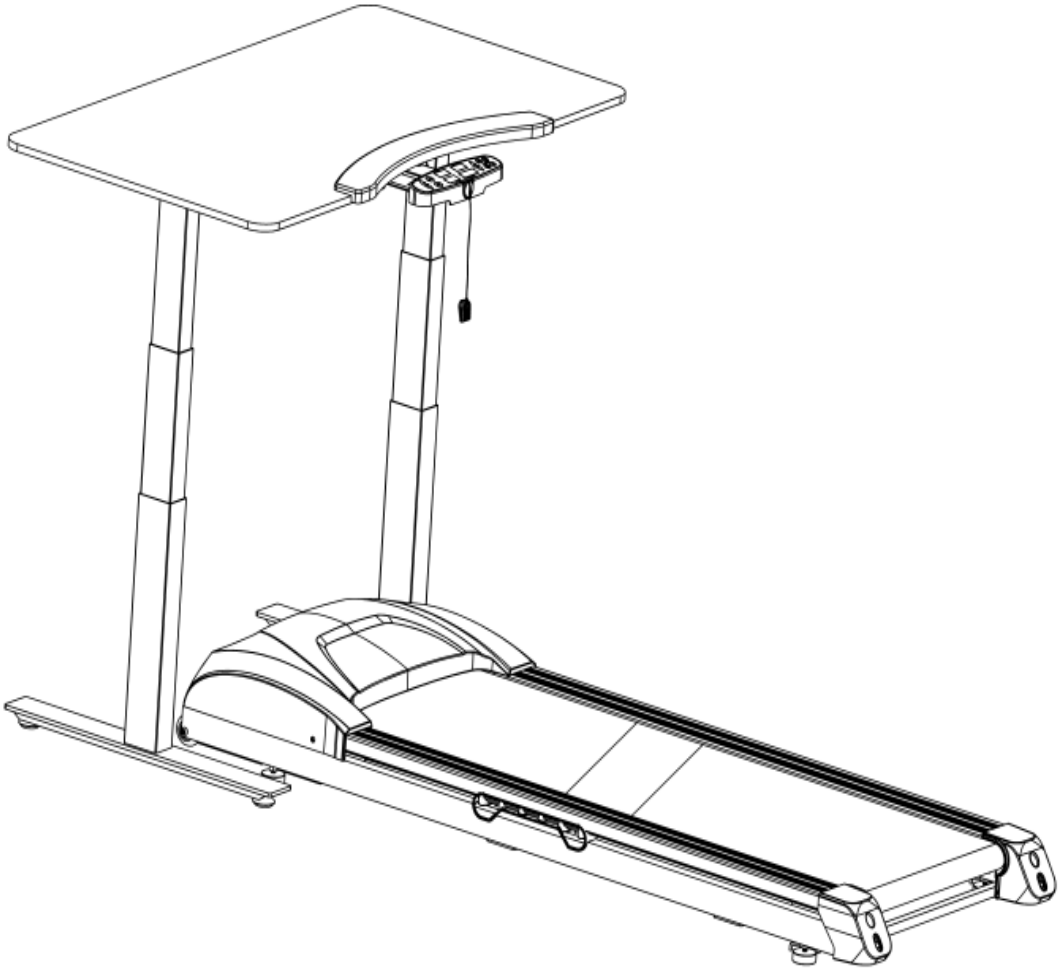

IMPORTANT: Read all instructions carefully before using this product. Retain this owner's manual for the future reference.

Caution: The user is cautioned that changes or modifications not expressly approved by the party responsible for compliance could void the user's authority to operate the equipment.

This device complies with Part 15 of the FCC Rules. Operation is subject to the following two conditions: (1) this device may not cause harmful interference, and (2) this device must accept any interference received, including interference that may cause undesired operation.

NOTE: This equipment has been tested and found to comply with the limits for a Class B digital device, pursuant to Part 15 of the FCC Rules. These limits are designed to provide reasonable protection against harmful interference in a residential installation. This equipment generates, uses and can radiate radio frequency energy and, if not installed and used in accordance with the instructions, may cause harmful interference to radio communications. However, there is no guarantee that interference will not occur in a particular installation.
If this equipment does cause harmful interference to radio or television reception, which can be determined by turning the equipment off and on, the user is encouraged to try to correct the interference by one or more of the following measures:
-- Reorient or relocate the receiving antenna.
-- Increase the separation between the equipment and receiver.
-- Connect the equipment into an outlet on a circuit different from that to which the receiver is connected.
-- Consult the dealer or an experienced radio/TV technician for help.

FCC Radiation Exposure Statement:
This equipment complies with FCC radiation exposure limits set forth for an uncontrolled environment. This transmitter must not be co-located or operating in conjunction with any other antenna or transmitter.

IMPORTANT SAFETY PRECAUTIONS

1. Plug the power cord into a surge protector (not Included) then plug the surge protector into a grounded circuit. No other appliances should be on the same circuit.

2. Position the treadmill on a clear level surface. Do not place the treadmill on thick carpet as it may interfere with proper ventilation. Always place treadmill indoors and never place treadmill near water.

3. Start the treadmill while you are standing on the side rails. Adjust speed in small increments to avoid sudden jumps in speed..

4. Always wear walking or aerobic shoes with rubber soles.

5. Always unplug the power cord before removing the treadmill motor cover.

6. Keep small children away from the treadmill during operation.

7. Always attach the safety key cord to your clothing when using the treadmill.

8. The power cord and plug must always be in perfect condition. Otherwise, do not attempt to repair on your own. Servicing other than the procedures in this manual, should only be performed by an authorized service representative.

9. MAXIMUM USER WEIGHT 136 kg (300 lb).

10. Keep at least 2’ of clear space around the machine on the sides and back of the user

Note the following treadmill electrical specifications:

a. Rated power input: 1120W;
b. Power voltage supply: 110V-127V;
c. Rated frequency: 50-60Hz;
d. Maximum current: 15 amps.

Introduction to your treadmill:

Congratulations for choosing the Active Station’s Treadmill. Your treadmill comes with many features and benefits. The information below will help you familiarize yourself with your treadmill and understand how to get the most out of the technology in the machine. When calling your service representative, always take note of the serial number located on the motor cover near the power cord cable.

ASSEMBLY INSTRUCTIONS

I	II 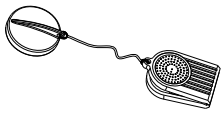	
III 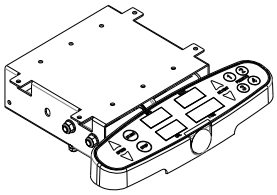	IV	V 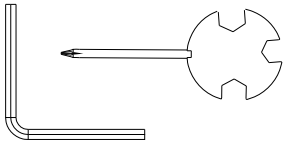

HARDWARE CONTENTS:

Parts #	Description	Qty.
I	MAIN FRAME	1
II	SAFTY LOCK	1
III	CONSOLE SET	1
IV	POWER CORD	1
V	ALLEN WRENCH & WRENCH W/SCREW DRIVER	1

EXPLODED DIAGRAM

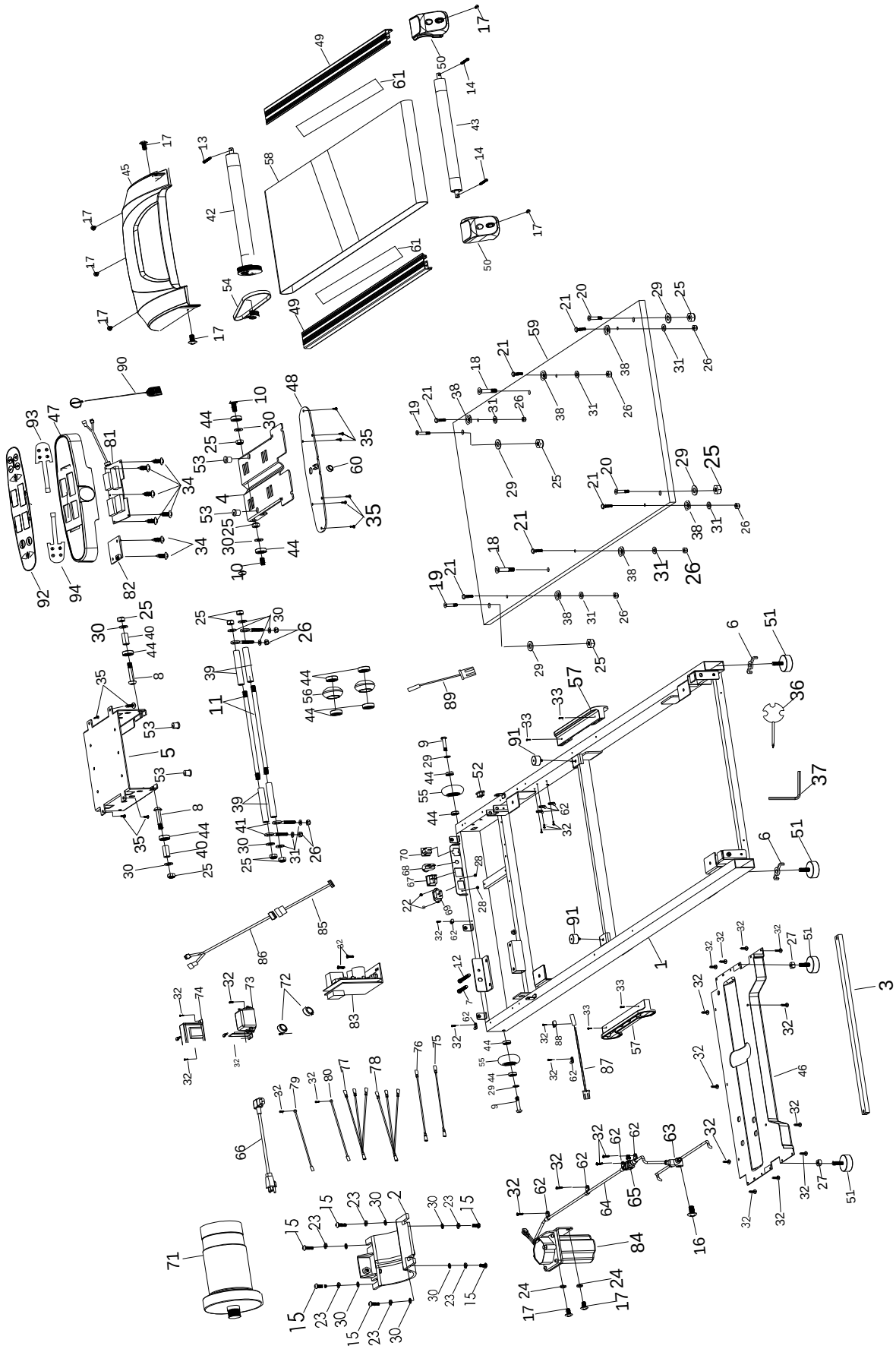

PARTS LIST

#	DESCRIPTION	REMARKS	QTY
1	Main frame		1
2	Motor holder		1
3	Oil pipe holder		1
4	Console sliding holder		1
5	Console fixed holder		1
6	Foot adjuster holder		2
7	Bolt	M8*35	1
8	Bolt	M8*45	2
9	Bolt	M8*40	2
10	Bolt	M8*20	2
11	Bolt	M8*210	2
12	Bolt	M8*30	1
13	Bolt	M8*60	2
14	Bolt	M8*65	3
15	Bolt	M8*20	6
16	Bolt	M5*30	1
17	Bolt	M5*10	13
18	Bolt	M8*32	2
19	Bolt	M8*40	2
20	Bolt	M6*25	2
21	Bolt	M6*30	6
22	Bolt	M3*10	2
23	Spring washer	D8	6
24	Spring washer	D5	2
25	Nylon nut	M8	12
26	Nylon nut	M6	10
27	Hex nut		2
28	Nylon nut	M4	2
29	Lock washer	D8	6
30	Flat washer	D8	18
31	Flat washer	D6	10
32	Screw	ST4.2*12	35
33	Screw	ST4.2*25	4
34	Screw	ST2.5*7	7
35	Screw	ST4.2*15	10
36	Open spanner		1
37	Allen wrench		1
38	Washer		6
39	Sleeve	ϕ8.5*ϕ12*80	4
40	Sleeve	ϕ8.5*ϕ12*25	2
41	Adjuster bolt	M6*40	4
42	Front roller		1
43	Rear roller		1

#	DESCRIPTION	REMARKS	QTY
47	Console top cover		1
48	Console bottom cover		1
49	Side rail		2
50	Rear end cap		1 Pair
51	Foot adjuster		4
52	Stopper		1
53	Stopper		4
54	Belt		1
55	Rear wheel		2
56	Roller		2
57	Gel cushion		2
58	Running belt		1
59	Running deck		1
60	Power cord buckle		1
61	Anti-slip mat		2
62	R-shape buckle		11
63	Tee junction		1
64	Oil pipe		1
65	Oil pipe switch		1
66	Power cord		1
67	Power switch		1
68	Over-current protector		1
69	Power input		1
70	Power output		1
71	DC motor		1
72	Magnet ring		2
73	Reactance		1
74	Filter		1
75	Power connecting wire		1
76	Power connecting wire		1
77	Power connecting wire		1
78	Power connecting wire		1
79	Ground lead		1
80	Ground lead		1
81	Upper controller		1
82	Table adjuster		1
83	Lower controller		1
84	Lubricator		1
85	Round cushion	ϕ30*M6*16.5	2
86	Signal line		1
87	Speed sensor		1
88	Sensor holder		1
89	Switch sensor		1

#	DESCRIPTION	REMARKS	QTY
44	wheel bearing		12
45	Motor top cover		1
46	Motor bottom cover		1

#	DESCRIPTION	REMARKS	QTY
90	Emergency switch		1
91	Membrane switch		1
92	Console overlay		1
93	Membrane switch		1

ASSEMBLY STEPS

Step 1: Locate a comfortable work site. Set the treadmill in a clear area and remove all packaging materials. Do not dispose of the packaging until assembly is completed. Refer to the drawings below to identify the parts used in assembly.
Remarks: Better to assemble the machine with more than two people to avoid injury.

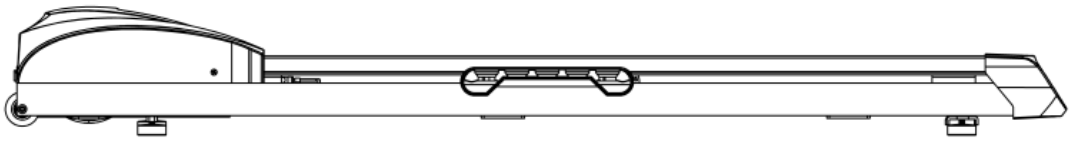

Step 2: Attach the console set (III) to the bottom of the table with supplied 4 screws (35).

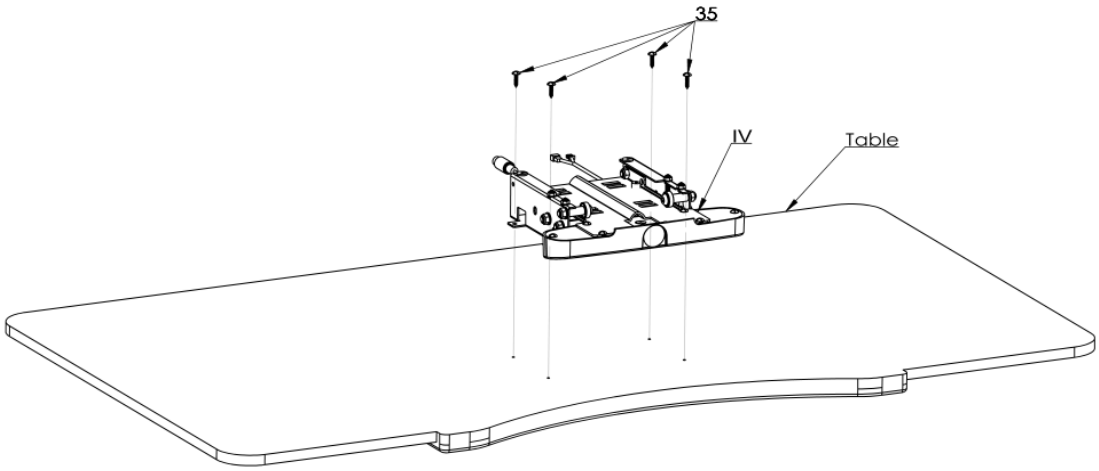

Remarks: Adjust the tension of the console set on the rails by the 4 pieces of screws as the arrows point in the below picture.

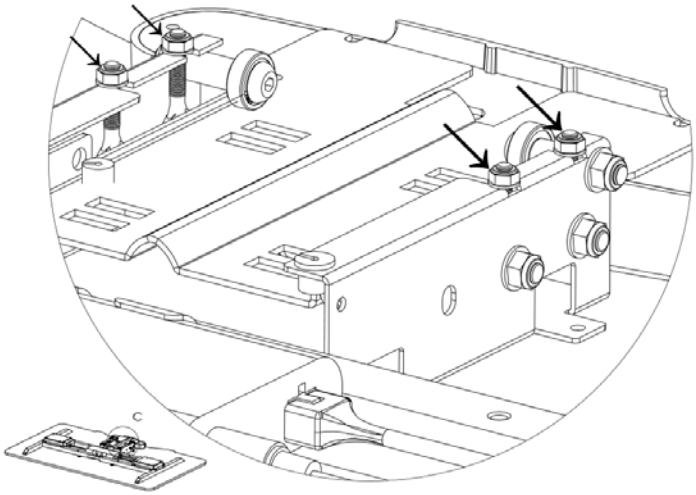

Step3: Connect the treadmill and table control wires and place the emergency switch onto the console.

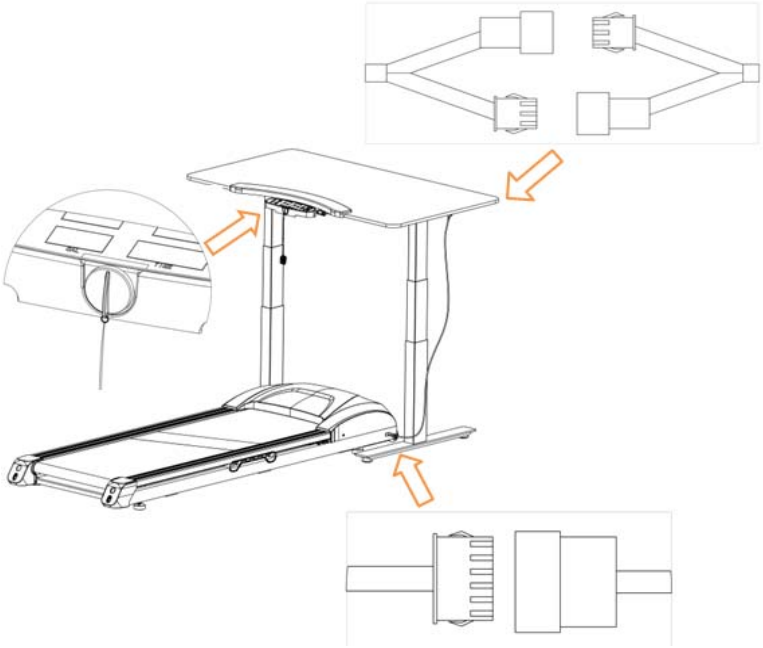

Step4: Turn on the knob (A) for self-lubricating counterclockwise as shown below.

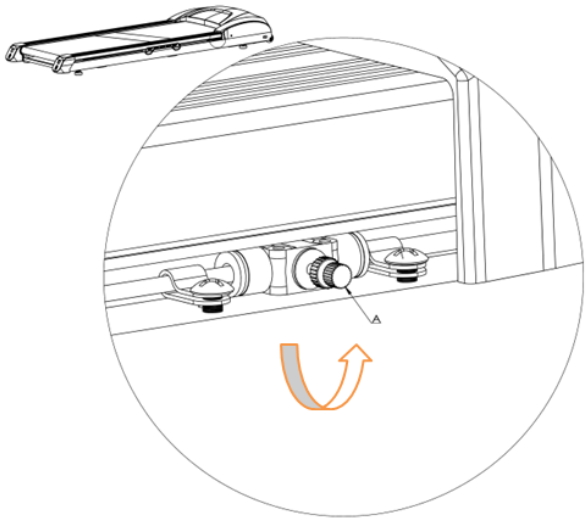

CAUTION:

1. DO NOT PLUG IN THE POWER CORD UNTIL FINAL ASSEMBLY HAS BEEN COMPLETED AND MOTOR COVER IS IN PLACE.

2. Read the instructions fully prior to assembly start.
4. Keep Children away from the treadmill at all times.

DIMENSIONS AND PARAMETERS

BUILT UP SIZE	1,960×710×230 mm 77.2×28×9.1 inch	SPEED RANGE	0.6 – 2.5 MPH
RUNNING AREA	1,480×510 mm 58.3×20 inch	**MAX USER WEIGHT**	**136Kg/300Lb**
LED DISPLAY	SPEED, DISTANCE, CALORIES & TIME.		

SUGGESTED STRETCHES

1. <u>WARM-UP:</u>

A proper warm-up increases your body temperature, heart rate and circulation in preparation for exercise. Start each workout with 5 to 10 minutes of stretching and light exercise. See suggested stretches below:

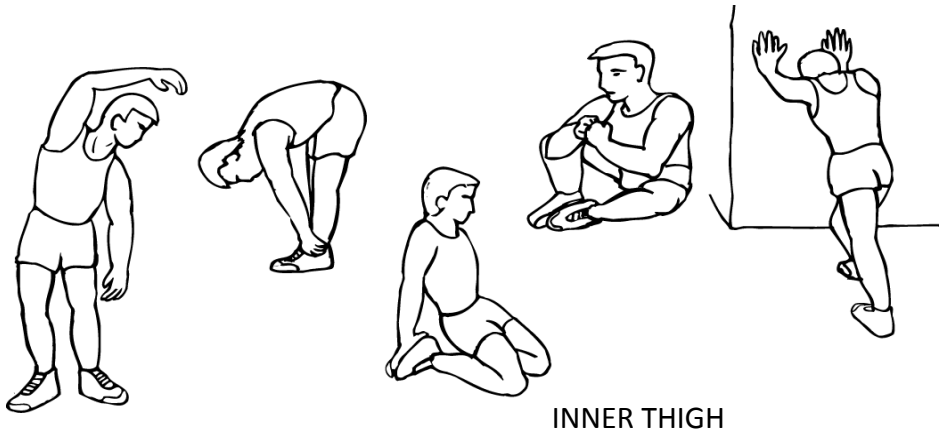

INNER THIGH

FORWARD BENDS

CALF / ACHILLES

SIDE BENDS

OUTER THIGH

CONSOLE OPERATION

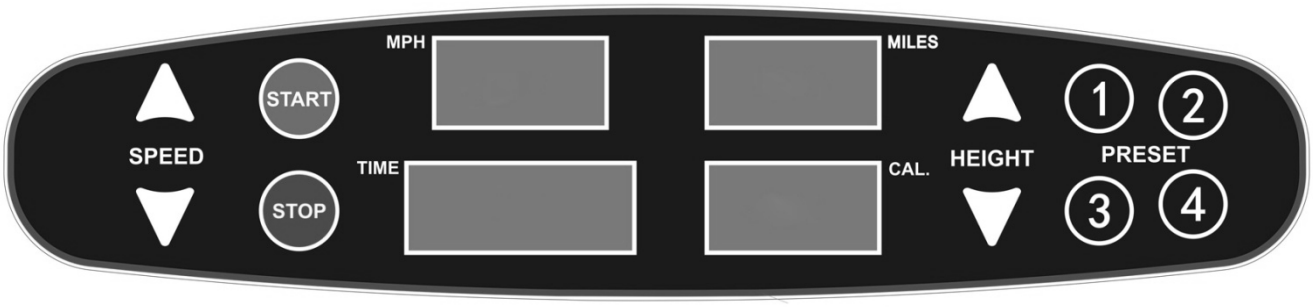

The LED window shows: MPH (speed), TIME, MILES (distance) and CAL. (calories).

1. Window MPH (speed): Displays the current speed. Speed Range: 0.6~2.5MPH.
2. Window TIME: Displays the total workout time. Time Range: 0:00~99:59.
3. Window MILES (distance): Displays the total workout distance. Distance range: 0.0~99.9.
4. CAL. (calories): Displays the total workout calories. Calories range: 0~999.

BUTTON OPERATIONS:

Please NOTE that the treadmill can be operated ONLY when the safety key is inserted.

1. START: Press the button to start the treadmill.

2. STOP: Press the button to stop the treadmill.

3. SPEED▲:

a. To set the speed, press the speed button until the desired speed show on the display.

b. Increase the speed as desired while walking by pressing the Speed▲. When the speed reaches 2.5mph, pressing SPEED▲ will no longer increase the speed.

4. SPEED▼

   a. To set the speed, press the speed button until the desired speed show on the display.

   b. Decrease the speed as desired while walking by pressing the Speed▼. When the speed reaches 0.6mph, pressing SPEED▼ will no longer decrease the speed.

5. HEIGHT▲: Increase the height as desired by pressing the HEIGHT▲.

6. HEIGHT▼: Decrease the height as desired by pressing the HEIGHT▼.

7. HEIGHT MEMORY 1, 2, 3, 4: Press buttons will automatically take you to the desired height level.

8. Press height memory button for 5 seconds to set height memory

MODE OPERATION

1. Normal: Insert the safety Key then press “START”. Then the running belt is starting to move. The treadmill will start from the speed of 0.6mph and the time will count up from 0:00 to 99:59. When the time reaches to 99:59, it will count up from 0 again. Press SPEED▲ and ▼ to adjust the speed.

2. Bluetooth: Download and install the Active Station APP from APP store on the smart device. Pair it with the unit via Bluetooth and connect when using it to take advantage of its features.

3. Sleep: The treadmill will turn to SLEEP status if inactive for 10 minutes.

4. Emergency stop: The emergency switch is designed to function as an emergency stop mechanism. For this reason it extremely important that the safety key CORD is attached to your clothing at all times while using the treadmill. Pull out from the emergency switch, the treadmill will stop immediately with the beep signaling and the windows will display “---“. The treadmill will stop. Attach the switch to start the treadmill again.

PARAMETER RANGE

SETTING PARAMETER	DISPLAY RANGE	SETTING BEGINING VALUE	SET UP RANGE
SPEED	0.6—2.5 MPH	0.6 MPH	0.6—2.5 MPH
TIME (MINUTE : SECOND)	0:00—99:59	N/A	N/A
DISTANCE (MILES)	0.00—99.9	N/A	N/A
CALORIES(THERM)	0—999	N/A	N/A

TROUBLESHOOTING GUIDE

Error code	Cause	Checking	Correction
E01	No sensor signal	1. Check the distance and place between sensor and magnet.	1. Adjust the distance between the sensor and the magnet.
		2. Check if the wire is broken.	2. Change the wire.
		3. Check if the magnetism is good.	3. Change the magnet.
		4. Check if the controller is damaged.	4. Change to a new controller.
E02	Over-voltage protection of the motor	1. Check if the network voltage is stable.	1. Regulator is needed to adjust the voltage.
		2. Check if the controller is damaged.	2. Change to a new controller.
E03	Over-current protection	1. The machine is overloaded.	1. Verify user weight is within allowed parameters
		2. Check if the motor or the roller gets stuck by something.	2. Take the foreign matter out.
		3. Check roller lubrication.	3. Lubricate the roller.
		4. Check if the controller is damaged.	4. Change to a new controller.
		5. Check if the motor is damaged.	5. Change to a new motor.
E04	Open circuit	1. Check the wires of the motor are connected well.	1. Connect the motor wires properly.
		2. Check if the motor is open-circuit.	2. Change to a new motor.
		3. Check if the controller is open-circuit.	3. Change to a new controller.
E06	Message failure	1. Check if the connecting wires are plugged well.	1. Plug all the wires properly.
		2. Check if the connecting wires are broken.	2. Change to the new wires.
		3. Check if the console is broken.	3. Change to a new console.
		4. Check if the controller is damaged.	4. Change to a new controller.
E07	Emergency switch off	1. Check if the emergency switch is attached.	1. Attached the emergency switch.

Error code	Cause	Checking	Correction
		2. Check if the sensor wire of the emergency switch is damaged.	2. Change to the new sensor wire of the emergency switch.
		3. Check if the port of the emergency switch is damaged.	3. Change to a new console.
E0C	Burst clash	The controller is damaged.	Change to a new controller.

BELT ADJUSTMENT

1. We suggest that you cut off power for 10 minutes after an extended walking period
2. The belt is too loose if it slips during use when you apply forward pressure on it.
3. If the belt is too tight, it would affect the performance of motor and increase the abrasion of roller and belt.
4. When properly tightened, the belt can be lifted about 2”-3” from the deck.

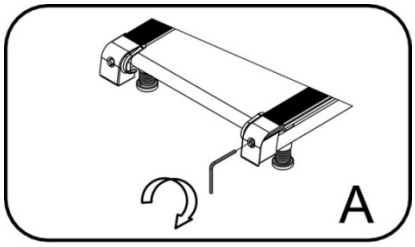

Center the running belt

1. Place treadmill on a level surface and run at full speed. If the belt drifts to the right, pull out the switch, turn the right adjusting bolt 1⁄4 turn clockwise, then start running until centering the belt. **PICTURE - A**
2. If the belt drifts to the left, pull out the switch, turn the left adjusting bolt 1⁄4 turn clockwise, then start running until centering the belt. **PICTURE - B**
3. Tighten the belt if loosened after a period of use by pulling the safety switch and turning the left and right adjusting bolt 1⁄4 turn clockwise, re-start the treadmill. Repeat until adequate tightness is achieved **PICTURE - C**

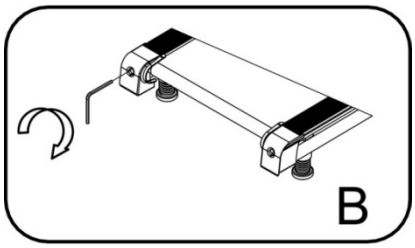

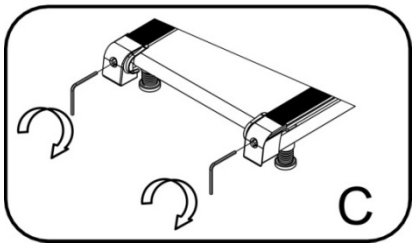

BELT AND DECK LUBRICATION

This treadmill is equipped with a pre-lubricated, low maintenance deck system and an automatic lubrication pump. The pump is designed to lubricate the belt every 200 miles of use.

The liquid silicone bottle needs to be re-filled every 6,000 miles of use. To re-fill, remove the motor cover and unscrew the cap on the pump. Re-fill using only pure liquid silicone 1000cst (see drawing below).

In case it is required, pressing the + and – speed buttons at the same time will also run the lubricate pump for 10 seconds.

Lubricating oil supplement

1. Remove the motor cover screws and the motor cover.

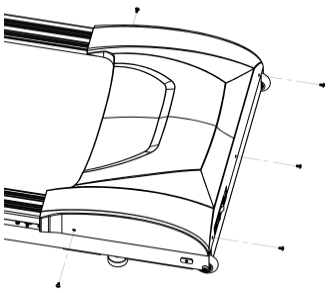

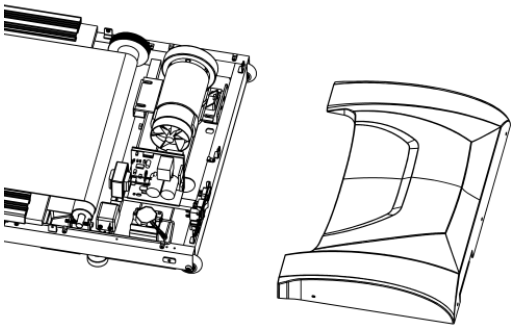

2. Loosen the nut A from the lubricant pump.

3. Fill bottle with lubricant and fasten the nut.

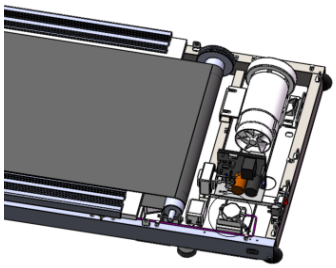

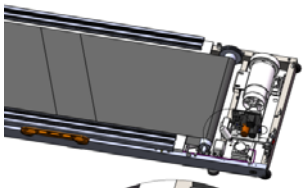

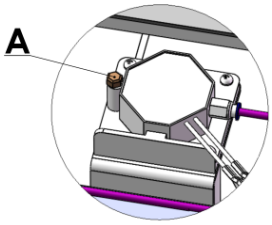

4. Reinstall the motor cover and tighten screws.