Empowering Connections,
Creating a Digital Future

# User Guide

## P20 Portable Data Terminal

# Disclaimer

- This guide is the sole property of Fujian LANDI Commercial Equipment Co., Ltd. (“LANDI”). Unauthorized reproduction, distribution, transfer, or sale of this document or any part thereof is strictly prohibited without explicit authorization from LANDI. LANDI reserves the right to take legal action for any infringement according to law.
- Every effort has been made to ensure the accuracy and completeness of the information in this user guide. However, errors or omissions may exist.
- LANDI reserves the right to modify product software, hardware or documentation without notice.
- Product details in this guide may differ from the actual product due to updates. Refer to the physical product for authoritative information.
- LANDI shall not be held liable for damages, malfunctions, data loss or accessory loss caused by operations not complying with instructions in this guide.

# Use this Manual

## Legend

| | | |
|---|---|---|
| | **Danger** | Indicates a potentially hazardous situation which, if not avoided, could result in death or serious injury. |
| | **Warning** | Indicates a potentially hazardous situation which, if not avoided, may result in equipment damage, data loss, performance degradation, or unexpected results. |
| | **Notes** | Indicates important information that helps make better use of the device and features. |

# Important Safety Information

## Safety Rules

- **Power Supply**
  - Use only provided LANDI power adapter.
  - Maintenance restricted to authorized LANDI technicians.
  - Connect to properly rated electrical outlet.
  - Ensure outlet is easily accessible and meets local regulations.
  - Disconnect adapter from electrical mains network to power off.
  - Shut down terminal after daily operations to save energy.
  - Avoid connecting or disconnecting components while powered on.

- **Battery Safety**
  - Use only LANDI-approved batteries and chargers.
  - Internal lithium button battery: service by qualified technician only.
  - Avoid short-circuiting, crushing, puncturing, or dismantling the battery.
  - Replacing the battery with an incorrect type can defeat its safeguards and risk explosion.
  - Disposing of a battery in fire or a hot oven can cause an explosion.
  - Leaving a battery in extreme heat may cause an explosion or leakage of flammable substances.
  - Subjecting a battery to extremely low air pressure may cause an explosion or leakage.
  - Properly dispose of used batteries according to local environmental regulations.

- **Environmental Restrictions**
  - Avoid use in explosion-risk areas (chemical plants, fuel depots).
  - Suspend use during thunderstorms.
  - Use certified protective cover near fuel pumps.
  - Remove battery when on aircraft.
  - Avoid harsh environments with direct sunlight, high temperatures, humidity, or dust.
  - Operate and store the terminal only within the specified environmental limits:
    - Operating Temperature:
      - Non-Battery Version: 0°C to +40°C (32°F to 104°F)
      - Battery Version: 0°C to +50°C (32°F to 122°F) for discharging; 0°C to +40°C (32°F to 104°F) for charging
    - Storage Temperature: -20°C to +60°C (-4°F to 140°F)
    - Operating Humidity: 10% to 90% non-condensing

- **Health and Safety**
  - Radio transmission may interfere with medical devices.
  - Consult healthcare providers regarding potential interference.

## Usage Instructions

- **Terminal Security**
  - Verify PCI PTS security compliance.
  - Regular inspection for tampering signs:
    - Keypad integrity
    - Unauthorized wire connections
    - Card reader condition
  - Report "Warning Detected" messages immediately.

- Restrict access to verified trustworthy staff.

- **Customer Protection**
  - Never request PIN disclosure.
  - Advise customers on PIN privacy.
  - Maintain terminal visibility at all times.
  - Secure terminal against theft or replacement.

- **Component Guidelines**
  - Keep SAM/SIM reader compartment cover in place.
  - Battery life factors:
    - Feature usage patterns
    - Charge cycle frequency
    - Operating temperature

- **Network Compliance**
  - Follow cellular network regulations.
  - Non-compliance may result in service ban or legal action.

- **Abnormal Conditions**

If any of the following phenomena occur during work:

- Stop operation immediately.
- Cut off power supply.
- Promptly report to service provider when:
  1. Hearing sharp noises during operation
  2. Impurities or water enter terminal
  3. Unpleasant odors emit during operation

# Contents


**Disclaimer** ..... **2**

**Use this Manual** ..... **3**

Legend ..... 3

**Important Safety Information** ..... **4**

Safety Rules ..... 4

Usage Instructions ..... 5

**1. Product Profile** ..... **8**

1.1. Introduction ..... 8

1.2. Unboxing Inspection ..... 8

1.3. Overview ..... 9

**2. Product Installation** ..... **13**

2.1. Power Connection ..... 13

2.2. SAM/SIM Cards ..... 14

2.3. MicroSD Memory Card ..... 14

2.4. Paper Roll ..... 15

**3. Usage** ..... **16**

3.1. Pre-Operation Check ..... 16

3.2. Power Operations ..... 16

3.3. Card Reading ..... 16

**4. Maintenance** ..... **18**

**5. Transportation and Storage** ..... **19**

**6. FAQs** ..... **20**

**7. Frequency Bands and RF Output Power** ..... **21**

**8. Standards** ..... **23**

**9. Customer Support** ..... **28**

# 1. Product Profile

## 1.1. Introduction

The P20 is a portable data terminal that combines Android functionality with secure PIN pad features. It features a 5-inch touch screen display and runs on Android 14 operating system. The device supports multiple payment methods and offers comprehensive connectivity options including 4G, Wi-Fi, and Bluetooth 5.0. Designed for merchant mobility, the P20 comes with a long-lasting battery and adheres to industry security standards. Its physical PIN keyboard ensures secure transaction processing while maintaining user conveniences.

## 1.2. Unboxing Inspection

Upon opening, inspect the terminal and optional accessories for any signs of disassembly or transit damage. Check for:

- Terminal main unit
- Battery pack
- Power adapter
- Quick start guide
- USB cable

Remove all plastic packaging from the terminal and accessories. Peel off the protective film from the LCD screen. Retain the transit packaging for future transportation of the terminal.

## 1.3. Overview

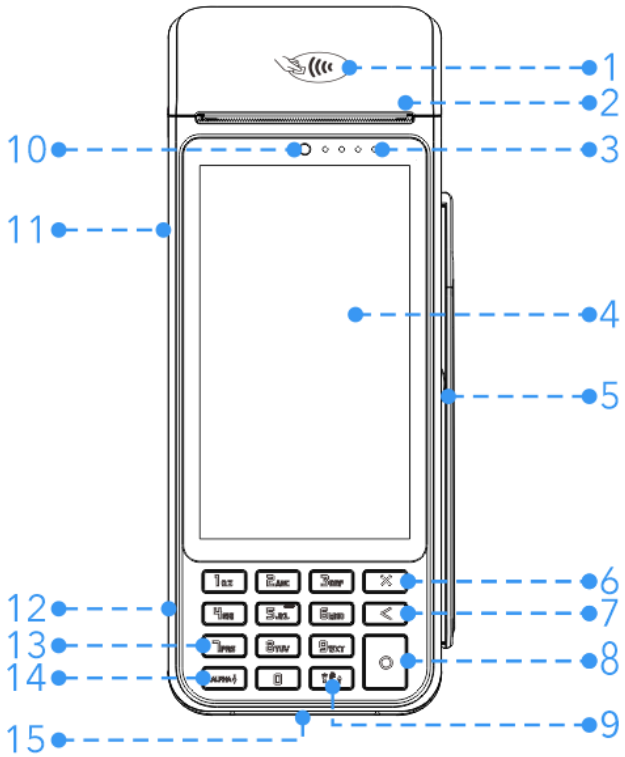


**1. Contactless Reader**

Reads contactless cards (including membership cards).

**2. Printer Cover**

Opens for paper loading/unloading.

**3. LEDs for Contactless Reader**

Indicate contactless transaction status.

**4. LCD and Touch screen**

Displays content and accepts signature input.

**5. Magnetic Stripe Reader**

Reads magnetic stripe cards (stripe facing the terminal).

**6. Cancel Button**

Returns to previous menu or cancels operation.

**7. Clear Button**

Clears input content.

**8. Confirm Button**

Confirms current operation.

**9. Punctuation Button**

Inputs punctuation.

**10. Front Camera**

Scans QR codes/barcodes and takes photos.

**11. Power Button**

Short press: Wakes up/locks screen.

Long press:

- 2-3s (when off): Powers on.
- 2-3s (when on): Powers off/restarts.
- 10-12s: Forces shutdown if system freezes.

**12. USB Type-C Port**

Supports charging and developer debugging.

**13. Number Button**

Inputs numbers.

**14. Letters Button**

Switches between numbers and letters.

**15. Smart Card Reader**

Insert card vertically, chip facing up.

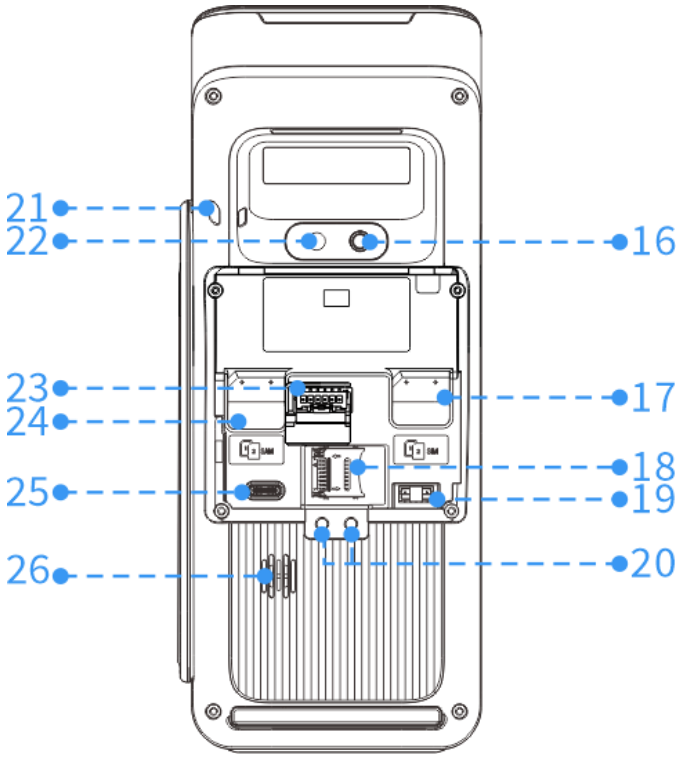


**16. Flashlight**

Provides lighting for the camera.

**17. SIM Card Slot**

Accepts the SIM card.

**18. MicroSD Card Slot**

Accepts the MicroSD card.

**19. Fiscal Module Interface**

Reserved for fiscal module connection.

**20. Base Charging Interface**

Charges terminal when placed on base.

**21. Lanyard Hole**

Attachment point for strap.

**22. Rear Camera**

Scans QR/bar codes and captures photos.

**23. Battery Connector**

Connects lithium battery.

**24. SAM Card Slot**

Accepts the SAM card.

**25. Magic Link Interface**

Provides Ethernet, RS232, and USB ports for peripheral connectivity.

**26. Speaker**

Outputs audio.

# 2. Product Installation

The module connectors are located in a sealed compartment beneath the back cover. To access:

1. Power off the terminal and turn it face down.
2. Locate the back cover latch and push up to release.
3. Remove the back cover and the battery.

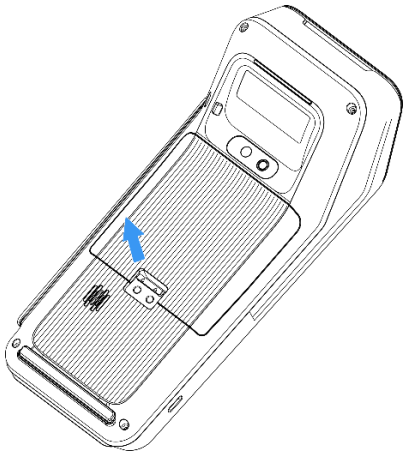

The product is available in two hardware configurations, distinguished by their Hardware Version Identification Number (HVIN): P2W1 for the battery version and P2C1 for the non-battery version.

## 2.1. Power Connection

- **Non-battery version:** Connect power adapter to start.
- **Battery version:** Place battery pack into compartment and connect battery plug.

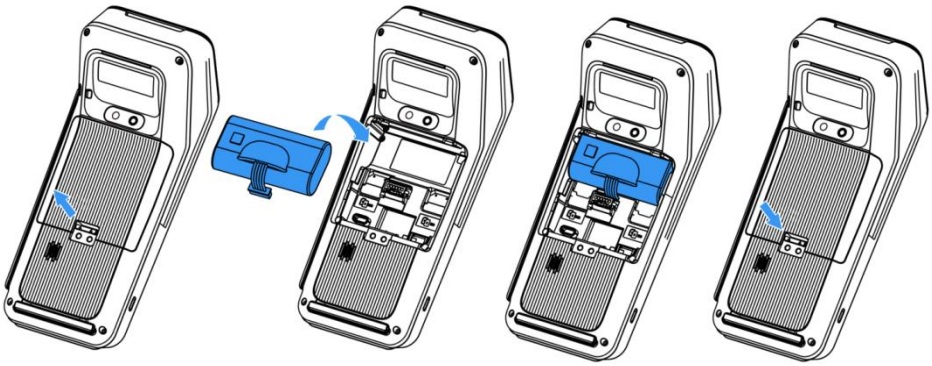

**Battery Charging**

1. Connect power adapter to USB Type-C port (left side).
2. Plug adapter into power supply mains.
3. Verify charging status: Check for lightning bolt icon in screen's upper right corner.

## 2.2. SAM/SIM Cards

**SAM/SIM Card Slots**

- Upper slots: SAM2 and SIM2
- Lower slots: SAM1 and SIM1

**Installation Steps**

1. Orient the card according to diagram.
2. Insert it into the slot until firmly seated.
3. For single card use, prefer bottom slots (SAM1/SIM1).

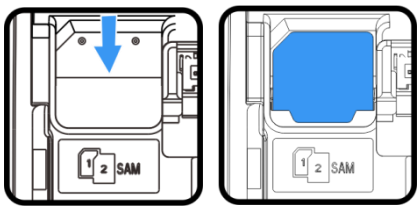


SAM

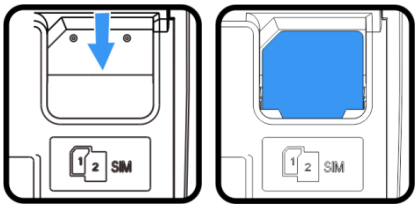


SIM

SIM and SAM slots appear identical - verify correct position before insertion.

## 2.3. MicroSD Memory Card

1. Slide the card cover left to unlock and lift up.
2. Insert the MicroSD card with contacts facing down, aligning the notched corner as shown in the diagram.
3. Close the cover and slide right to lock.

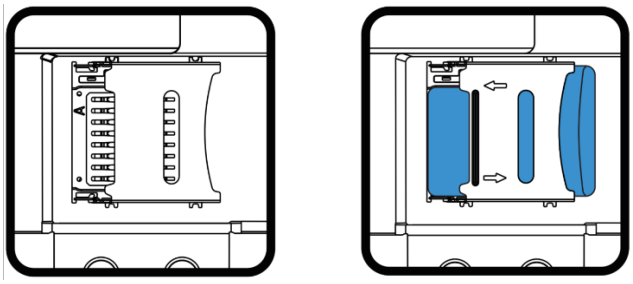

## 2.4. Paper Roll

**Specifications**

| Parameter | Value |
|---|---|
| Color | White |
| Width | 58 mm (2.283 inch) |
| Diameter | 40 mm (1.57 inch) |

**Installation Steps**

1. Locate the notch at the top of terminal.
2. Lift the printer cover from the notch and push upward to fully open.
3. Insert the paper roll following the direction shown in the diagram.
4. Pull the paper end slightly beyond the cover edge and close the cover firmly until it clicks.

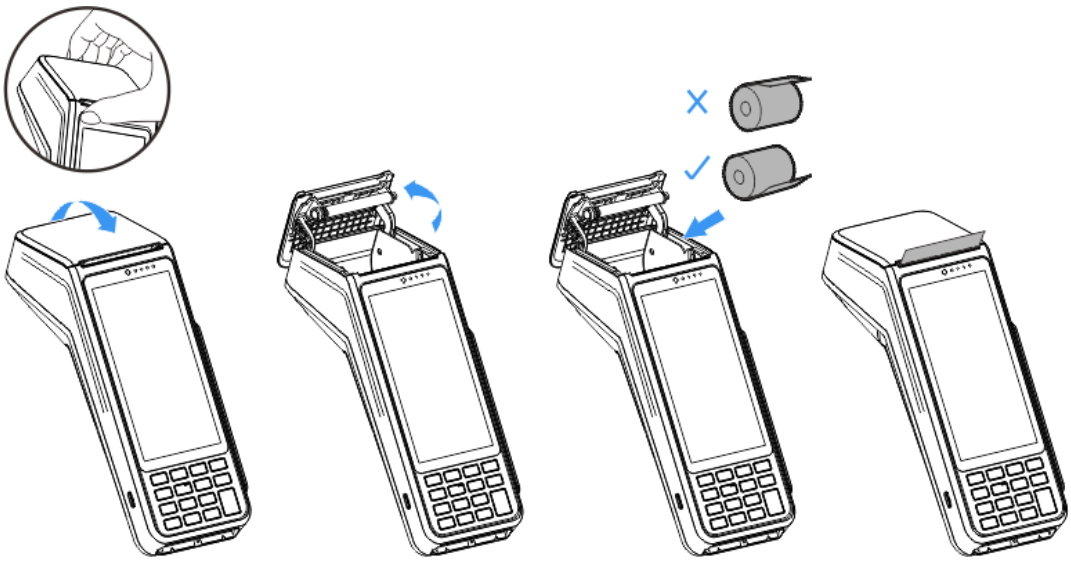

For new rolls, remove first complete turn to avoid printing on adhesive residue.

# 3. Usage

## 3.1. Pre-Operation Check

Before operation, ensure the thermal paper roll is properly installed.

## 3.2. Power Operations

- **Power On**

With battery properly installed, press the power button for 2–3 seconds until screen activates.

- **Power Off/Restart**

Press the power button 2–3 seconds, select **Power off** or **Restart** from menu.

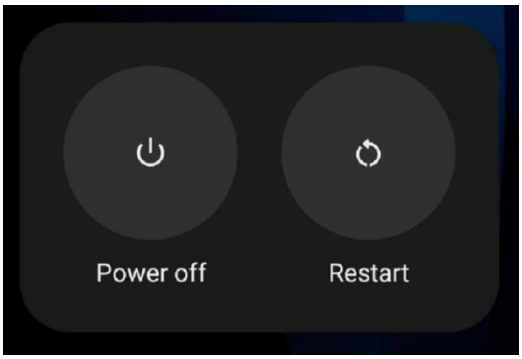


- **Screen Control**

Short press the power button for 0.5 seconds to turn the display on or off.

## 3.3. Card Reading

- **Magnetic Stripe Card**

Swipe in either direction with magnetic stripe facing terminal.

- **Smart Card**

Insert vertically, chip facing up; keep inserted during transaction.

- **Contactless Card**

Hold card steady against reader area until transaction completes.

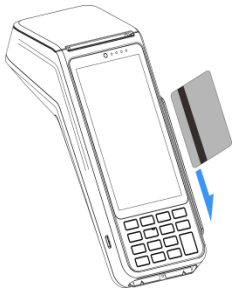

Magnetic Stripe Card

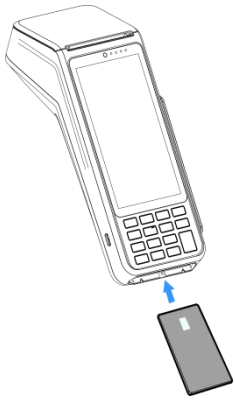

Smart Card

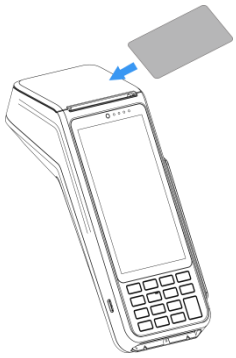

Contactless Card

# 4. Maintenance

When cleaning, always disconnect the power source first. Wipe the exterior surfaces with a soft, dry cloth.

- For light dirt, dampen a clean cloth with 1–2 drops of mild, neutral cleaner. Never spray cleaners or liquids directly onto the display screen and do not use an overly wet cloth.
- For stubborn stains, gently wipe with isopropyl alcohol or an alcohol-based cleaner. Do not use diluent thinners, trichloroethylene, ketone-based solvents or other strong chemicals as these may damage plastic or rubber parts.

# 5. Transportation and Storage

- **Transportation**

The terminal should be handled carefully to prevent damage from rain, snow, sunlight, mechanical impacts, or dropping. The packaging must prevent crushing during transit to avoid damage.

- **Storage**

Store the product in its original packaging box. The storage area should be free of hazardous gases, flammables, explosives, corrosives, strong vibrations, impacts, or magnetic fields. Place the box at least 15 cm off the ground and 50 cm away from walls, heat/cold sources, windows, or air intakes.

# 6. FAQs

**Question: Why won’t my terminal start?**

**Answer:**

1. Verify power supply/battery level.
2. Restart terminal.
3. If problem persists, contact customer service.

**Question: Why isn't the printer working?**

**Answer:**

1. Check power supply:
   - Battery level status
   - Power connection integrity
2. Check paper installation:
   - Paper roll orientation
   - Dust cover placement
3. If problem persists, contact customer service.

**Question: Why did my transaction fail to process?**

**Answer:**

1. Test multiple contactless cards.
2. Verify proper card swiping technique.
3. Try manual transaction mode.
4. Check card components:
   - SAM card installation
   - SIM card placement
5. Verify network connection.
6. Contact customer service if unresolved.

# 7. Frequency Bands and RF Output Power

The P20 terminal supports the following wireless specifications:

| Network Type | Band | TX Frequency (MHz) | RX Frequency (MHz) | Max RF Output Power (dBm) |
|---|---|---|---|---|
| GSM | 900 | 880 - 915 | 925 - 960 | 33 |
| | DCS1800 | 1710 - 1785 | 1805 - 1880 | 30 |
| WCDMA | I | 1920 - 1980 | 2110 - 2170 | 24 |
| | V | 824 - 849 | 869 - 894 | 24 |
| | VIII | 880 - 915 | 925 - 960 | 24 |
| LTE | B1 | 1920 - 1980 | 2110 - 2170 | 23 |
| | B3 | 1710 - 1785 | 1805 - 1880 | 23 |
| | B5 | 824 - 849 | 869 - 894 | 23 |
| | B7 | 2500 - 2570 | 2620 - 2690 | 23 |
| | B8 | 880 - 915 | 925 - 960 | 23 |
| | B20 | 832 - 862 | 791 - 821 | 23 |
| | B28 | 703 - 748 | 758 - 803 | 23 |
| | B38 | 2570 - 2620 | 2570 - 2620 | 23 |
| | B40 | 2300 - 2400 | 2300 - 2400 | 23 |
| | B41 | 2496 - 2690 | 2496 - 2690 | 23 |

| Wireless Type | Frequency Range (MHz) | Max RF Output Power (dBm) |
|---|---|---|
| Bluetooth | 2402 - 2480 | 7.60 |
| Bluetooth LE | 2402 - 2480 | 6.47 |
| 2.4 GHz Wi-Fi | 2412 - 2472<br>2422 - 2462 | 17.51 |
| 5 GHz Wi-Fi | 5180 - 5700 | 16.92 |
| 5.8 GHz Wi-Fi | 5745 - 5825 | 13.96 |
| NFC | 13.56 | N/A |
| GPS | 1559 - 1610 | N/A |

** For EU Compliance*

**ATTENTION**

- The device for operation in the band 5150-5250 MHz is only for indoor use to reduce the potential for harmful interference to co-channel mobile satellite systems.
- The maximum antenna gain permitted for devices in the bands 5250-5350 MHz and 5470-5725 MHz shall comply with the e.i.r.p. Limit.

- The maximum antenna gain permitted for devices in the band 5725-5825 MHz shall comply with the e.i.r.p. Limits specified for point-to-point and non point-to-point operation as appropriate.
- Users should also be advised that high-power radars are allocated as primary users (i.e. priority users) of the bands 5250-5350 MHz and 5650-5850 MHz and that these radars could cause interference and or damage to LE-LAN devices.

- L'appareil fonctionnant dans la bande 5150-5250 MHz est destiné uniquement à une utilisation en intérieur afin de réduire les risques d'interférences nuisibles aux systèmes satellites mobiles utilisant le même canal.
- Le gain maximal d'antenne autorisé pour les appareils fonctionnant dans les bandes 5250-5350 MHz et 5470-5725 MHz doit être conforme à la limite de p.i.r.e.
- Le gain maximal d'antenne autorisé pour les appareils fonctionnant dans la bande 5725-5825 MHz doit être conforme aux limites de p.i.r.e. spécifiées pour l'exploitation point à point et non point à point, selon le cas.
- Les utilisateurs doivent également être informés que les radars de haute puissance sont désignés comme utilisateurs principaux (c'est-à-dire utilisateurs prioritaires) des bandes 5250-5350 MHz et 5650-5850 MHz, et que ces radars peuvent causer des interférences et/ou endommager les appareils LE-LAN.

# 8. Standards

**CE SAR Statement**

This equipment complies with Directive 2014/53/EU radiation exposure limits set forth for an uncontrolled environment. End user must follow the specific operating instructions for satisfying RF exposure compliance. This transmitter must not be co-located or operating in conjunction with any other antenna or transmitter.

The portable device is designed to meet the requirements for exposure to radio waves established by European Union market (France). These requirements set an SAR limit of 4W/kg averaged over ten grams of tissue. The highest SAR values 2.455W/kg reported is under this standard during product certification for use when properly worn on the limbs.

Hereby, Fujian LANDI Commercial Equipment Co., Ltd. declares that the radio equipment type P20 is in compliance with Directive 2014/53/EU. The full text of the EU declaration of conformity is available at https://www.landiglobal.com.

**If you are the importer, you shall, in accordance with the requirements of Article 12 of Directive 2014/53/EU of the European Parliament and of the Council of 16 April 2014, indicate on the radio equipment your name, registered trade name or registered trade mark and the postal address at which you can be contacted or, where that is not possible, on its packaging or in a document accompanying the radio equipment. This includes cases where the size of radio equipment does not allow it, or where importers would have to open the packaging in order to indicate your name and address on the radio equipment. The contact details shall be in a language easily understood by end-users and market surveillance authorities.*

**FCC Compliance Statement**

This device complies with Part 15 of the FCC Rules. Operation is subject to the following two conditions:

- This device may not cause harmful interference
- This device must accept any interference received, including interference that may

cause undesired operation.

Changes or modifications not expressly approved by the party responsible for compliance could void the user's authority to operate the equipment.

This equipment has been tested and found to comply with the limits for a Class B digital device, pursuant to Part 15 of the FCC Rules. These limits are designed to provide reasonable protection against harmful interference in a residential installation. This equipment generates, uses and can radiate radio frequency energy and, if not installed and used in accordance with the instructions, may cause harmful interference to radio communications. However, there is no guarantee that interference will not occur in a particular installation.

If this equipment does cause harmful interference to radio or television reception, which can be determined by turning the equipment off and on, the user is encouraged to try to correct the interference by one or more of the following measures:

- Reorient or relocate the receiving antenna.
- Increase the separation between the equipment and receiver.
- Connect the equipment into an outlet on a circuit different from that to which the receiver is connected.
- Consult the dealer or an experienced radio/TV technician for help.

**FCC SAR Statement**

This equipment complies with FCC radiation exposure limits set forth for an uncontrolled environment. End user must follow the specific operating instructions for satisfying RF exposure compliance. This transmitter must not be co-located or operating in conjunction with any other antenna or transmitter.

The portable device is designed to meet the requirements for exposure to radio waves established by the Federal Communications Commission (USA). These requirements set an SAR limit of 4 W/kg averaged over ten grams of tissue. The highest SAR value reported is under this standard during product certification for use when properly worn on the extremity. This equipment should be installed and operated with a minimum distance of 0

mm between the radiator and your extremity.

**ISED compliance statement**

This device contains licence-exempt transmitter(s)/receiver(s) that comply with Innovation, Science and Economic Development Canada’s licence-exempt RSS(s). Operation is subject to the following two conditions:

(1) This device may not cause interference.

(2) This device must accept any interference, including interference that may cause undesired operation of the device.

L’émetteur/récepteur exempt de licence contenu dans le présent appareil est conforme aux CNR d’Innovation, Sciences et Développement économique Canada applicables aux appareils radio exempts de licence. L’exploitation est autorisée aux deux conditions suivantes :

(1) L’appareil ne doit pas produire de brouillage;

(2) L’appareil doit accepter tout brouillage radioélectrique subi, même si le brouillage est susceptible d’en compromettre le fonctionnement.

**IC SAR statement**

This equipment complies with ISED radiation exposure limits set forth for an uncontrolled environment. End user must follow the specific operating instructions for satisfying RF exposure compliance. This transmitter must not be co-located or operating in conjunction with any other antenna or transmitter.

The portable device is designed to meet the requirements for exposure to radio waves established by the ISED.

These requirements set a SAR limit of 4 W/kg averaged over ten grams of tissue. The highest SAR value reported under this standard during product certification for use when properly worn on the limbs.

Cet équipement est conforme aux limites d'exposition aux rayonnements ISED établies pour un environnement non contrôlé. L'utilisateur final doit suivre les instructions

d'utilisation spécifiques pour satisfaire la conformité à l'exposition RF. Cet émetteur ne doit pas être co-situé ou fonctionner conjointement avec une autre antenne ou émetteur. L'appareil portable est conçu pour répondre aux exigences d'exposition aux ondes radio é tablies par l'ISED.

Ces exigences fixent une limite de SAR de 4 W/kg en moyenne sur dix grammes de tissu. La valeur SAR la plus élevée déclarée en vertu de cette norme lors de la certification du produit pour une utilisation lorsqu'elle est correctement portée sur les membres.

**Environmental Compliance (WEEE, Batteries and Packaging)**

LANDI P20 is labeled in accordance with European Directives 2012/19/EU concerning Waste Electrical and Electronic Equipment (WEEE) and 2013/56/EC concerning Batteries and Accumulators. Those provisions are requiring producers and manufacturers to become liable for take-back, treatment and recycling upon end of life of equipment and batteries.

The crossed-out wheeled bin symbol on the product or accessories indicates it is considered electronic equipment waste (WEEE) which must be properly disposed of and should not be thrown away. Spent batteries must also be collected separately for recycling.

Please contact your retailer for more details on the take-back and recycling program in place for disposing of old equipment and batteries. Participating ensures their responsible re-use and recycling, which benefits both the environment and human health.

The Green Dot symbol on the packaging confirms it complies with Directive 94/62/EC concerning packaging and packaging waste. Packaging bearing this symbol must be returned through collection schemes managed by accredited Green Dot organizations for recovery and recycling.

**RF Compliance**

| | | | | | | | | |
|---|---|---|---|---|---|---|---|---|
| BE | BG | CZ | DK | DE | EE | IE | EL | UK(NI) |
| ES | FR | HR | IT | CY | LV | LT | LU | |
| HU | MT | NL | AT | PL | PT | RO | SI | |
| SK | FI | SE | NO | IS | LI | CH | TR | |

The functions of Wireless Access Systems including Radio Local Area Networks (WAS/RLANs) within the

band 5150-5350 MHz for this device are restricted to indoor use only within all European Union countries

廢電池請回收

**Accessibility Compliance**

The physical keyboard features a 12-key layout complemented by three function keys. The number 5 key, positioned at the center of the keypad, is equipped with a prominent Tactile Bump to enhance the user's tactile recognition capabilities, ensuring compliance with Accessibility standards.

This design provides excellent Tactile Recognizability. The bumped center key serves as a physical reference point, helping users quickly differentiate the function keys. This fulfills the requirement for "tactile discernibility" as stipulated in accessibility directives EN 301 549 and EU 2019/882. As a result, this design enables users with visual impairments or low vision to accurately identify key positions by touch, eliminating the need for visual operation and thereby enhancing the product's operability and inclusivity.

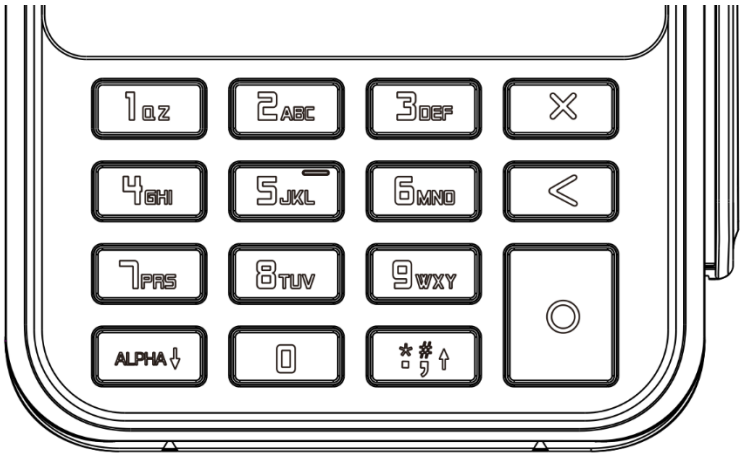

# 9. Customer Support

- **Data Backup**

Please back up all terminal data before requesting any after-sales support. LANDI does not back up data directly from terminals received for service work. We are not responsible for any data loss or deletion that may occur.

- **Repairs**

Please contact local distributors or LANDI after-sales team to arrange a repair. Be sure to keep your invoice or other valid proof of purchase documentation and present it when necessary.

- **Manufacturer**

Fujian LANDI Commercial Equipment Co., Ltd.

Correspondence Address: 5th & 6th Floor, Building 3A, Area A, Software Park, No.89, Software Avenue, Gulou District, Fuzhou, Fujian, 350001, China

Registered Address: Building 17, Area A, Software Park, No.89, Software Avenue, Gulou District, Fuzhou, Fujian, 350003, China

Phone: +86 0591-88077077, +86 400-658-0616

Fax: +86 0591-88077085

Website: http://www.landicorp.com