LAMDI Empowering Connections, Creating a Digital Future

User Guide

P20-R

Payment Terminal

Model:P20R01

Disclaimer

- This guide is the sole property of Fujian LANDI Commercial Equipment Co., Ltd. (“LANDI”). Unauthorized reproduction, distribution, transfer, or sale of this document or any part thereof is strictly prohibited without explicit authorization from LANDI. LANDI reserves the right to take legal action for any infringement according to law.
- Every effort has been made to ensure the accuracy and completeness of the information in this user guide. However, errors or omissions may exist.
- LANDI reserves the right to modify product software, hardware or documentation without notice.
- Product details in this guide may differ from the actual product due to updates. Refer to the physical product for authoritative information.
- LANDI shall not be held liable for damages, malfunctions, data loss or accessory loss caused by operations not complying with instructions in this guide.

Use this Manual

Legend

	Danger	Indicates a potentially hazardous situation which, if not avoided, could result in death or serious injury.
	Warning	Indicates a potentially hazardous situation which, if not avoided, may result in equipment damage, data loss, performance degradation, or unexpected results.
	Notes	Indicates important information that helps make better use of the device and features.

Important Safety Information

Safety Rules

- **Power Supply**
  - Use only provided LANDI power adapter.
  - Maintenance restricted to authorized LANDI technicians.
  - Connect to properly rated electrical outlet.
  - Ensure outlet is easily accessible and meets local regulations.
  - Disconnect adapter from electrical mains network to power off.
  - Shut down terminal after daily operations to save energy.
  - Avoid connecting or disconnecting components while powered on.

- **Battery Safety**
  - Use only LANDI-approved batteries and chargers.
  - Internal lithium button battery: service by qualified technician only.
  - Avoid short-circuiting, crushing, puncturing, or dismantling the battery.
  - Replacing the battery with an incorrect type can defeat its safeguards and risk explosion.
  - Disposing of a battery in fire or a hot oven can cause an explosion.
  - Leaving a battery in extreme heat may cause an explosion or leakage of flammable substances.
  - Subjecting a battery to extremely low air pressure may cause an explosion or leakage.
  - Properly dispose of used batteries according to local environmental regulations.

- **Environmental Restrictions**
  - Avoid use in explosion-risk areas (chemical plants, fuel depots).
  - Suspend use during thunderstorms.
  - Use certified protective cover near fuel pumps.
  - Remove battery when on aircraft.
  - Avoid harsh environments with direct sunlight, high temperatures, humidity, or dust.
  - Operate and store the terminal only within the specified environmental limits:
    - Operating Temperature:
      - Non-Battery Version (Without PSU): -10°C to +50°C (14°F to 122°F)
      - Non-Battery Version (With PSU): 0°C to +40°C (32°F to 104°F)
      - Battery Version: -10°C to +50°C (14°F to 122°F) for discharging; 0°C to +45°C (32°F to 113°F) for charging
    - Storage Temperature:
      - Without PSU: -20°C to +70°C (-4°F to 158°F)
      - With PSU: -20°C to +60°C (-4°F to 140°F)
    - Operating Humidity: 10% to 90% non-condensing

- **Health and Safety**
  - Radio transmission may interfere with medical devices.
  - Consult healthcare providers regarding potential interference.

Usage Instructions

- **Terminal Security**
  - Verify PCI PTS security compliance.
  - Regular inspection for tampering signs:
    - Keypad integrity
    - Unauthorized wire connections

    - Card reader condition
- Report "Warning Detected" messages immediately.
- Restrict access to verified trustworthy staff.

- **Customer Protection**
  - Never request PIN disclosure.
  - Advise customers on PIN privacy.
  - Maintain terminal visibility at all times.
  - Secure terminal against theft or replacement.

- **Component Guidelines**
  - Keep SAM/SIM reader compartment cover in place.

- **Network Compliance**
  - Follow cellular network regulations.
  - Non-compliance may result in service ban or legal action.

- **Abnormal Conditions**

If any of the following phenomena occur during work:

- Stop operation immediately.
- Cut off power supply.
- Promptly report to service provider when:
  1. Hearing sharp noises during operation
  2. Impurities or water enter terminal
  3. Unpleasant odors emit during operation

Contents

Disclaimer **2**

Use this Manual **3**

Legend 3

Important Safety Information **4**

Safety Rules 4

Usage Instructions 5

1. Product Profile **8**

1.1. Introduction 8

1.2. Unboxing Inspection 8

1.3. Overview 9

2. Product Technical Features **14**

3. Product Installation **16**

3.1. Power Connection 16

3.2. SAM/SIM Cards 17

3.3. MicroSD Memory Card 18

3.4. Privacy Shield 19

4. Usage **20**

4.1. Power Operations 20

4.2. Card Reading 20

4.3. Using the Camera 21

5. Maintenance **22**

6. Transportation and Storage **23**

7. FAQs **24**

8. Frequency Bands and RF Output Power **25**

9. Standards **27**

10. Customer Support **31**

1. Product Profile

1.1. Introduction

The LANDI P20-R is a high-performance payment terminal featuring an integrated PIN pad for a faster, more secure checkout. It combines PCI 7.0 certified security with the versatility to accept every payment method—from Chip & PIN and contactless to QR codes. Featuring a large 5" ergonomic display and a durable, spill-resistant design, the P20-R ensures a seamless and reliable experience for both merchants and customers.

1.2. Unboxing Inspection

Upon opening, inspect the terminal and optional accessories for any signs of disassembly or transit damage. Check for:

- Terminal main unit
- USB cable
- (Optional) Battery pack
- (Optional) Stylus
- Privacy shield
- Quick start guide
- Screwdriver
- Screw pack

Remove all plastic packaging from the terminal and accessories. Peel off the protective film from the LCD screen. Retain the transit packaging for future transportation of the terminal.

Locate the warranty seal on the top of the back cover. Please be aware that if this seal is torn, damaged, or removed, the product warranty will be voided.

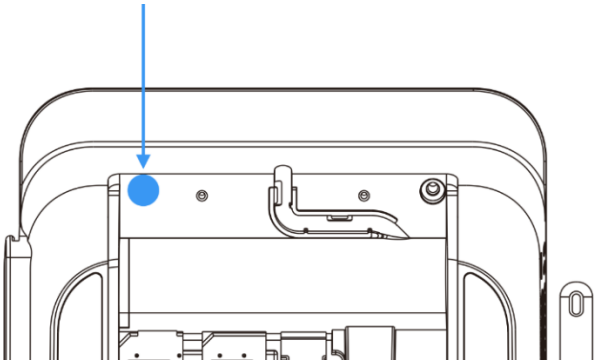

1.3. Overview

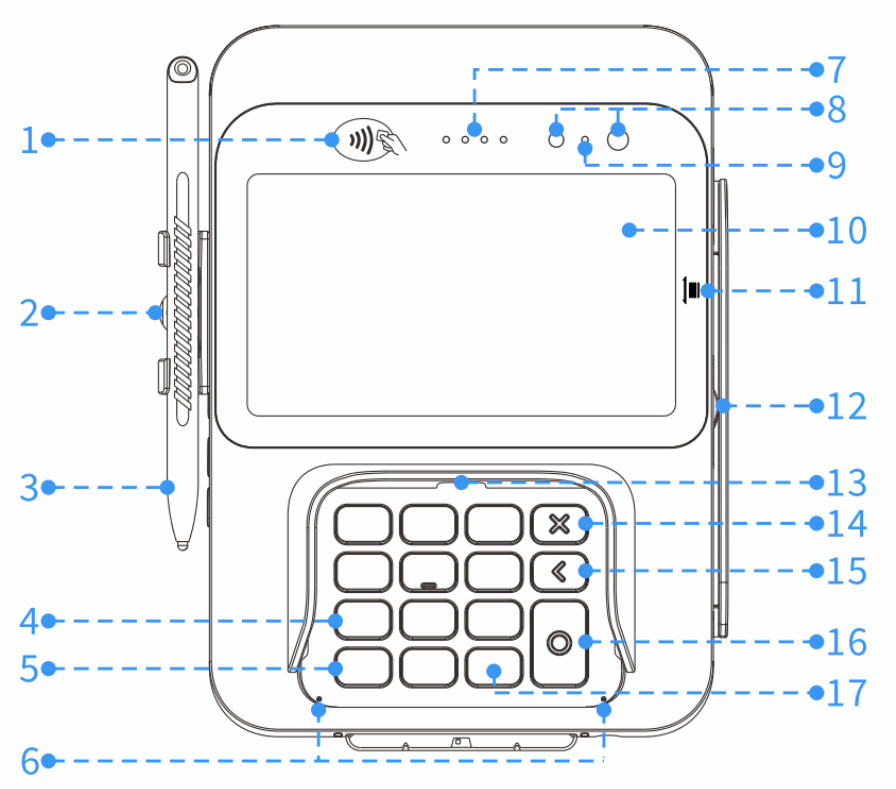

1. Contactless Reader

Reads contactless cards (including membership cards).

2. Pen Holder

Stores the passive stylus when not in use.

3. Stylus

Performs touch inputs and captures digital signatures.

4. Number Button

Inputs numbers.

5. Letters Button

Switches between numbers and letters.

6. Microphone

Provides clear voice input.

7. LEDs for Contactless Reader

Indicate contactless transaction status.

8. Front Camera

Scans barcodes and takes photos.

9. Camera Guide LED

Indicates the active scanning area to help with positioning.

10. LCD and Touch Screen

Displays content and accepts touch input.

11. LED for Magnetic Stripe Reader

Guides the user during a magnetic stripe card swipe.

12. Magnetic Stripe Reader

Reads magnetic stripe cards (stripe facing the terminal).

13. Skimming Detection

Detects unauthorized keyboards in real time to prevent data theft.

14. Cancel Button

Returns to previous menu or cancels operation.

15. Clear Button

Clears input content.

16. Confirm Button

Confirms current operation.

17. Punctuation Button

Inputs punctuation.

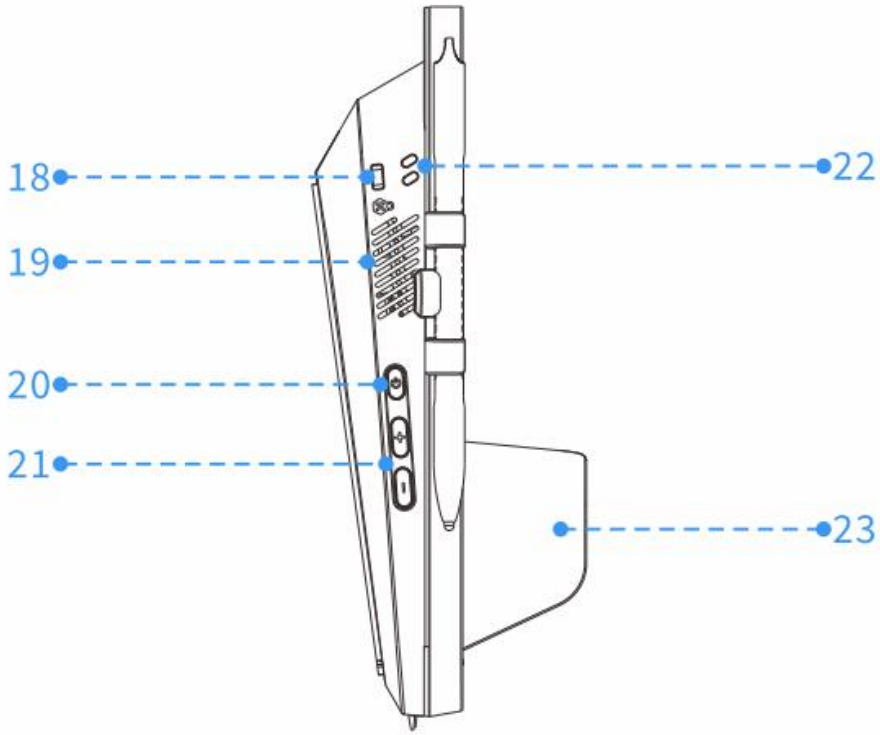

18. Anti-Theft Hole

Secures an anti-theft lock or cable.

19. Speaker

Outputs audio.

20. Power Button

Powers the terminal on (long press) or wakes/locks the screen (short press).

21. Volume Buttons

Adjust the system volume up or down.

22. Lanyard Hole

Attaches a lanyard or wrist strap.

23. Privacy Shield

Shields the keypad to protect PIN entry.

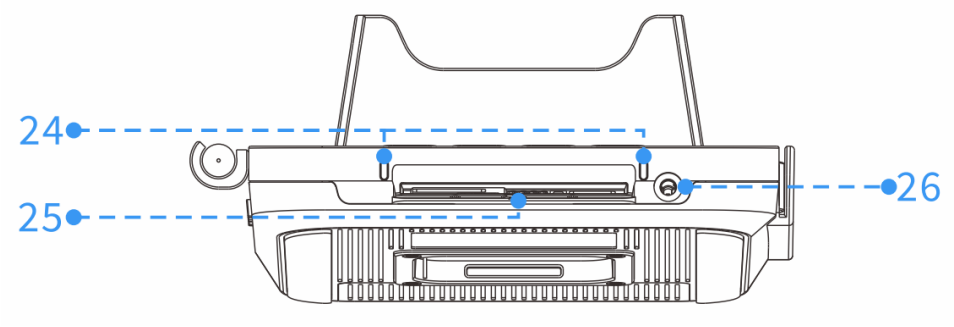

24. LEDs for Smart Card Reader

Indicate the status of a smart card transaction.

25. Smart Card Reader

Insert card vertically, chip facing up.

26. Headset Jack

Connects to a standard headset for audio.

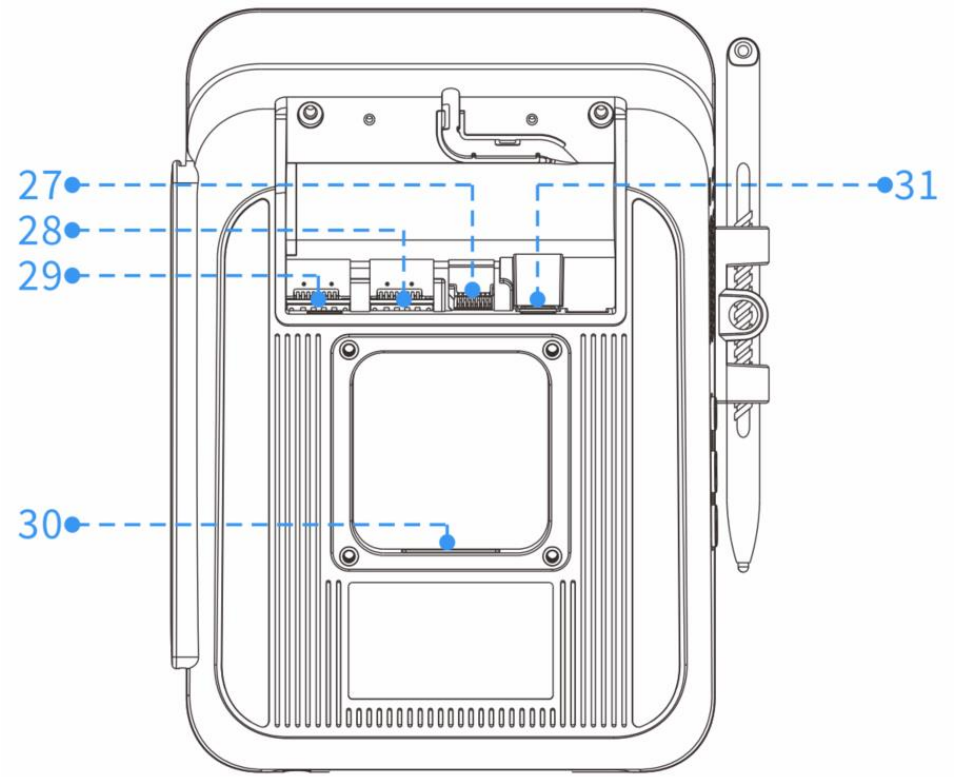

27. MicroSD Card Slot

Accepts the MicroSD card.

28. SAM Card Slot

Accepts the SAM card.

29. SIM Card Slot

Accepts the SIM card.

30. Mounting Bracket

Connects the terminal to a mounting stand.

31. USB Type-C Port

Used for power supply, developer debugging, and Magic Hub connection.

2. Product Technical Features

Processor	● Qualcomm 2290 (4x A53 @ 2.0GHz) ● (Optional) Qualcomm SM6225 (4x A73 + 4x A53 @ 2.4GHz)
OS	Android 14
Secure Element	TMC THM3654 with 32-bit ARM SC300 core (up to 192MHz), 256KB SRAM, 512KB Flash
Memory	● **Internal:** 2GB LPDDR4x RAM + 32GB Emmc (Optional) 4GB LPDDR4x RAM + 64GB eMMC ● **Expansion:** MicroSD card (up to 256GB)
Magnetic Stripe Reader	● ISO 1/2/3 track, bi-directional ● White LED guide light * 1
Smart Card Reader	● EMV L1 & ISO 7816 compliant ● White LED guide light * 2
Contactless Reader	● EMV Contactless L1 v3.2a ● Supports ISO/IEC 14443 Type A/B, FeliCa ● LED status indicator * 4
Display	5", 480×854, capacitive multi-touch
Buttons	● **Physical:** Power, Volume+, Volume- ● **Virtual:** Menu, Home, Back
Keypad	● Numeric key * 10 ● Function key * 5 ● (Optional) Keypad backlight
Audio	● **Speaker:** 30×20mm miniature oval audio speaker, 1W rated power, 8Ω ● **Headset:** 3.5 mm audio jack ● **MIC:** Dual microphone
Connectivity	● **Wi-Fi:** IEEE802.11 a/b/g/n/ac, 2.4G/5G ● **ETH:** 10/100 Mbps (via optional Magic Hub) ● **Bluetooth:** Bluetooth 5.0, support BLE ● **(Optional) Cellular:** 4G LTE
SAM/SIM/eSIM	● SAM slot * 2 (Accommodates a 3rd SAM by using a SIM slot) ● SIM slot * 2 (Supports Dual SIM, Dual Standby) ● Built-in eSIM (Mutually exclusive with the 2nd SIM slot)
Positioning	(Optional) GPS, GLONASS, BeiDou, Galileo
Onboard Ports	● USB Type-C * 1

	● Battery connector * 1
Magic Hub	(Optional) Provides charging and extends connectivity with: ● USB Host Type-A 2.0 * 2 ● USB Device Type-C * 1 ● RJ45 Ethernet port * 1 ● RJ22 serial port * 1
Front Camera	● 0.3MP fixed-focus (for barcode scanning) ● 5MP autofocus (for photo/video capture) ● (Optional) White LED guide light * 1
Security	● PCI PTS 7.x compliant ● Anti-removal & Skimming detection ● Kensington security slot ● Integrated physical privacy shield
PSU	● 5V/4A USB-C power adapter (includes 1.5m cable) ● (Optional) Power over Ethernet (PoE) supported via optional Magic Hub
Signature Capture	(Optional) Passive stylus supported
Environment	**Operating Temperature:** ● **Non-Battery Version (Without PSU):** -10°C to +50°C (14°F to 122°F) ● **Non-Battery Version (With PSU):** 0°C to +40°C (32°F to 104°F) ● **Battery Version:** -10°C to +50°C (14°F to 122°F) for discharging; 0°C to +45°C (32°F to 113°F) for charging
	Storage Temperature: ● **Without PSU:** -20°C to +70°C (-4°F to 158°F) ● **With PSU:** -20°C to +60°C (-4°F to 140°F)
	Operating Humidity: 10% to 90% non-condensing
Certification	CE, CB, FCC, IC, RCM, RoHS, WEEE

1.	HVIN:P2R-A	No external backup power function - the device will shut down immediately after the adapter is unplugged.
2.	HVIN:P2R-C	With built in super capacitor backup power function.
3.	HVIN:P2R-B	With external battery backup power function - the device will continue to work as intended for several minutes after the adapter in unplugged. It's the same design with HVIN:P2R-A, only add external battery.

3. Product Installation

The module connectors are located in a sealed compartment beneath the back cover. To access:

1. Turn the terminal face down.
2. Push the back cover in the direction indicated by the arrow as shown in the diagram and remove it.

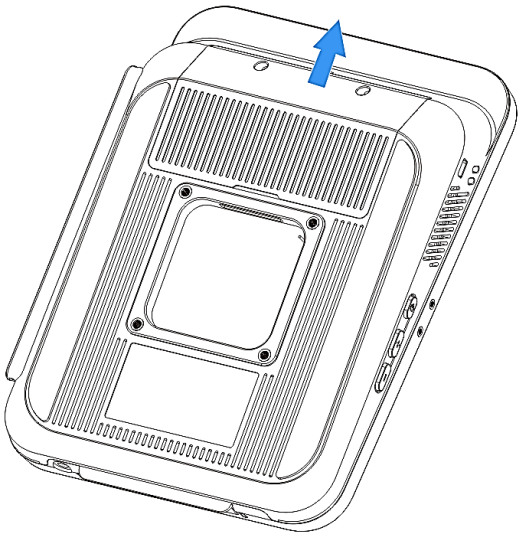

3.1. Power Connection

The battery pack is an optional component. If your terminal does not include a battery, please proceed directly to **Step 3**.

1. Connect the battery plug, then place the battery into its compartment.
2. Push the battery in the direction indicated by the arrows to secure it in place.
3. Connect the cable to the USB Type-C port. Ensure that the black, textured side of the connector is facing upwards upon insertion.
4. Arrange the cable and tuck it into the designated cable channel as shown in the diagram.
5. Replace the back cover by sliding it in the direction indicated by the arrows. Then, secure it by tightening the two M2*5 screws.

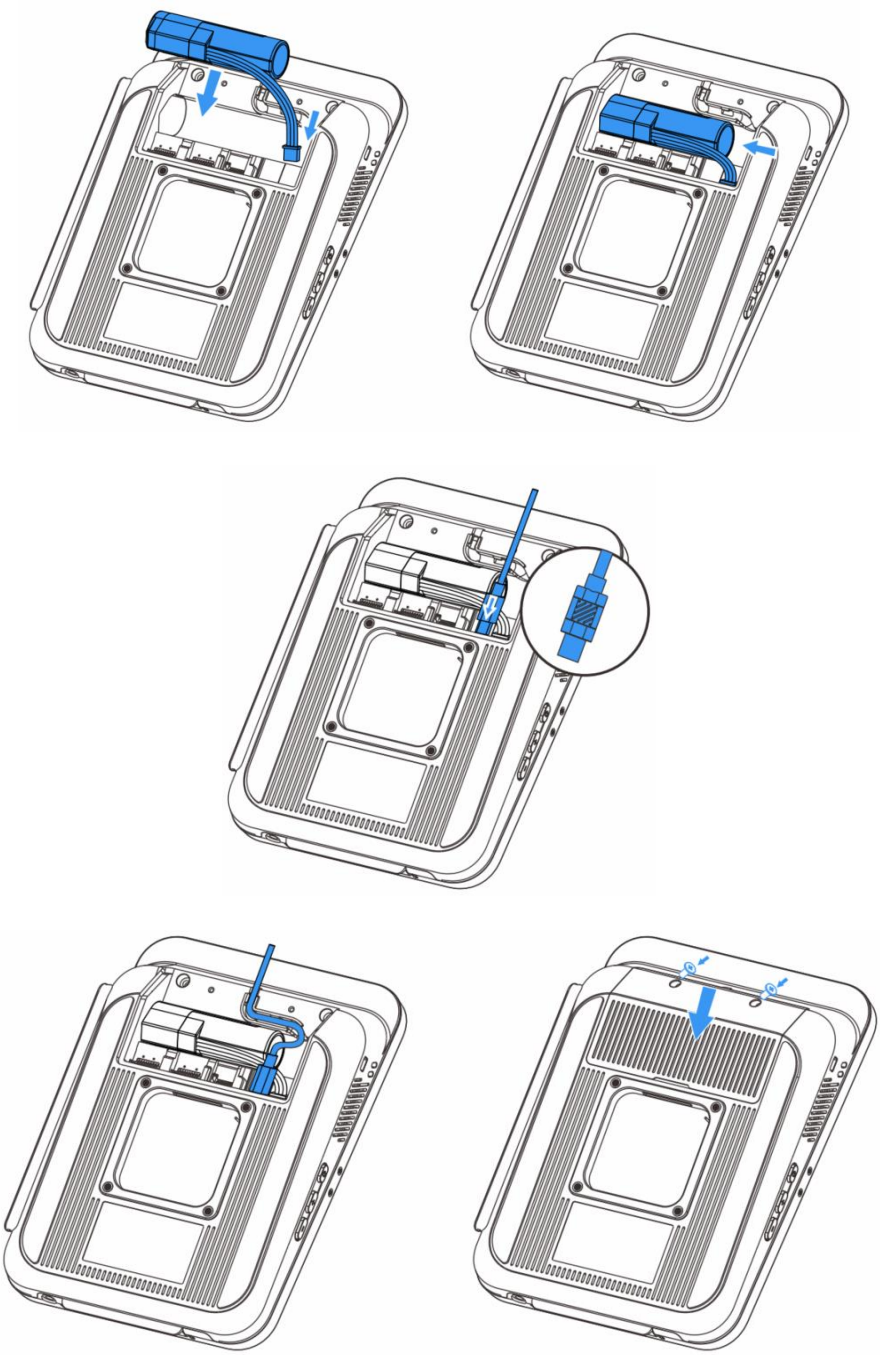

3.2. SAM/SIM Cards

SAM/SIM Card Slots

- Upper slots: SAM2 and SIM2
- Lower slots: SAM1 and SIM1

SIM and SAM slots appear identical - verify correct position before insertion. To distinguish between the two slots, refer to the markings located above them on the physical terminal.

Installation Steps

1. Orient the card according to diagram.
2. Insert it into the slot until firmly seated.
3. For single card use, prefer bottom slots (SAM1/SIM1).

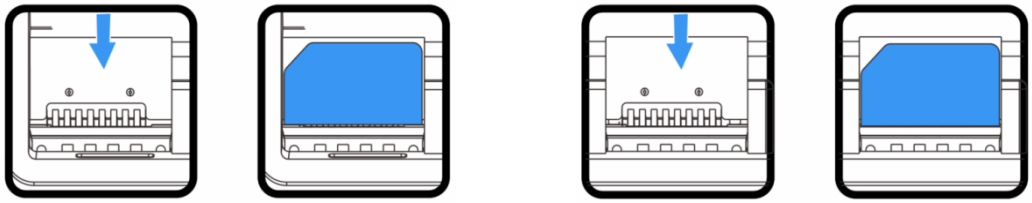

SAM SIM

- **3-SAM Mode:** To use a third SAM card, it must occupy one of the SIM slots. This leaves only one physical SIM slot available for use.
- **eSIM Mode:** Activating the eSIM disables the physical SIM2 slot. The device supports a "single physical SIM (SIM1) + eSIM" combination..

3.3. MicroSD Memory Card

1. Orient the card according to the diagram.
2. Insert it into the slot until firmly seated.

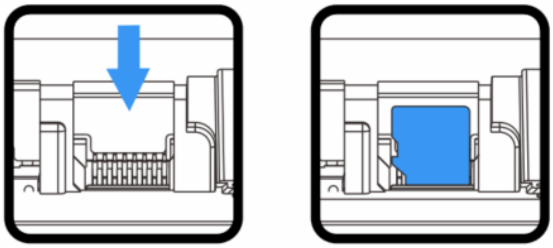

3.4. Privacy Shield

1. Press the privacy shield into the recessed slot on the upper casing.
2. Push it upwards in the direction indicated by the arrows.
3. Flex both sides of the privacy shield outwards in the direction of the arrows until it clicks securely into place.

4. Usage

4.1. Power Operations

- **Power On**

With the cables correctly connected as described in Section 3.1, the device will automatically power on when the other end of the cable is connected to a power source.

- **Power Off/Restart**

Press the power button 2–3 seconds, select **Power off** or **Restart** from menu.

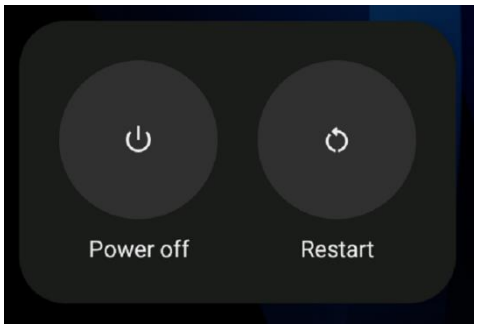

- **Screen Control**

Short press the power button for 0.5 seconds to turn the display on or off.

4.2. Card Reading

- **Magnetic Stripe Card**

Swipe in either direction with magnetic stripe facing terminal.

- **Smart Card**

Insert vertically, chip facing up; keep inserted during transaction.

- **Contactless Card**

Hold card steady against reader area until transaction completes.

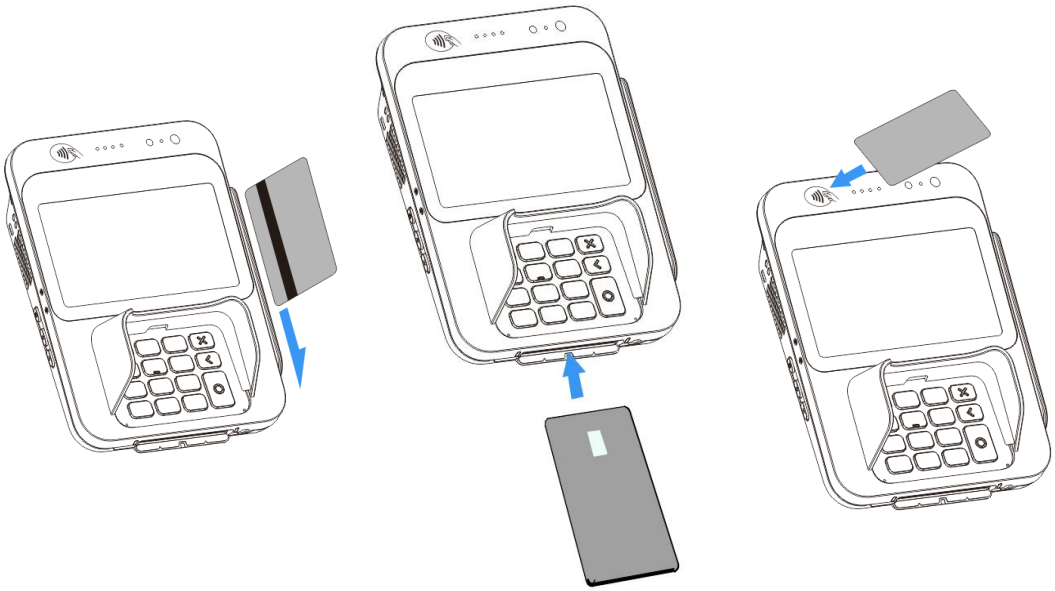

Magnetic Strip Card Smart Card Contactless Card

4.3. Using the Camera

The terminal is equipped with a dual front-facing camera system:

- **Scanning Camera (0.3MP, Fixed-Focus):** Optimized for fast and reliable barcode and QR code scanning.
- **Main Camera (5.0MP, Autofocus):** Designed for capturing high-quality photos and videos.

5. Maintenance

When cleaning, always disconnect the power source first. Wipe the exterior surfaces with a soft, dry cloth.

- For light dirt, dampen a clean cloth with 1–2 drops of mild, neutral cleaner. Never spray cleaners or liquids directly onto the display screen and do not use an overly wet cloth.
- For stubborn stains, gently wipe with isopropyl alcohol or an alcohol-based cleaner. Do not use diluent thinners, trichloroethylene, ketone-based solvents or other strong chemicals as these may damage plastic or rubber parts.

6. Transportation and Storage

- **Transportation**

The terminal should be handled carefully to prevent damage from rain, snow, sunlight, mechanical impacts, or dropping. The packaging must prevent crushing during transit to avoid damage.

- **Storage**

Store the product in its original packaging box. The storage area should be free of hazardous gases, flammables, explosives, corrosives, strong vibrations, impacts, or magnetic fields. Place the box at least 15 cm off the ground and 50 cm away from walls, heat/cold sources, windows, or air intakes.

7. FAQs

Question: Why won't my terminal start?

Answer:

1. Verify power supply level.
2. Restart terminal.
3. If problem persists, contact customer service.

Question: Why did my transaction fail to process?

Answer:

1. Test multiple contactless cards.
2. Verify proper card swiping technique.
3. Try manual transaction mode.
4. Check card components:
   - SAM card installation
   - SIM card placement
5. Verify network connection.
6. Contact customer service if unresolved.

8. Frequency Bands and RF Output Power

The P20-R terminal supports the following wireless specifications:

Network Type	Band	TX Frequency (MHz)	RX Frequency (MHz)	Max RF Output Power (dBm)
LTE	B1	1920 - 1980	2110 - 2170	25
	B3	1710 - 1785	1805 - 1880	25
	B5	824 - 849	869 - 894	25
	B7	2500 - 2570	2620 - 2690	25
	B8	880 - 915	925 - 960	25
	B20	832 - 862	791 - 821	24
	B28	703 - 748	758 - 803	25
	B38	2570 - 2620	2570 - 2620	25
	B40	2300 - 2400	2300 - 2400	25
	B41	2496 - 2690	2496 - 2690	25

Wireless Type	Frequency Range (MHz)	Max RF Output Power (dBm)
Bluetooth	2402-2480	4
2.4 GHz Wi-Fi	2412-2472	18.08
5 GHz Wi-Fi	5150-5700	16.63
5.8 GHz Wi-Fi	5745-5825	13.08
NFC	13.56	-2.81 dBuA/m@10m

** For EU Compliance*

ATTENTION

- The device for operation in the band 5150-5250 MHz is only for indoor use to reduce the potential for harmful interference to co-channel mobile satellite systems.
- The maximum antenna gain permitted for devices in the bands 5250-5350 MHz and 5470-5725 MHz shall comply with the e.i.r.p. Limit.
- The maximum antenna gain permitted for devices in the band 5725-5825 MHz shall comply with the e.i.r.p. Limits specified for point-to-point and non point-to-point operation as appropriate.

- Users should also be advised that high-power radars are allocated as primary users (i.e. priority users) of the bands 5250-5350 MHz and 5650-5850 MHz and that these radars could cause interference and or damage to LE-LAN devices.

- L'appareil fonctionnant dans la bande 5150-5250 MHz est destiné uniquement à une utilisation en intérieur afin de réduire les risques d'interférences nuisibles aux systèmes satellites mobiles utilisant le même canal.
- Le gain maximal d'antenne autorisé pour les appareils fonctionnant dans les bandes 5250-5350 MHz et 5470-5725 MHz doit être conforme à la limite de p.i.r.e.
- Le gain maximal d'antenne autorisé pour les appareils fonctionnant dans la bande 5725-5825 MHz doit être conforme aux limites de p.i.r.e. spécifiées pour l'exploitation point à point et non point à point, selon le cas.
- Les utilisateurs doivent également être informés que les radars de haute puissance sont désignés comme utilisateurs principaux (c'est-à-dire utilisateurs prioritaires) des bandes 5250-5350 MHz et 5650-5850 MHz, et que ces radars peuvent causer des interférences et/ou endommager les appareils LE-LAN.

9. Standards

FCC Compliance Statement

This device complies with Part 15 of the FCC Rules. Operation is subject to the following two conditions:

- This device may not cause harmful interference
- This device must accept any interference received, including interference that may cause undesired operation.

Changes or modifications not expressly approved by the party responsible for compliance could void the user's authority to operate the equipment.

This equipment has been tested and found to comply with the limits for a Class B digital device, pursuant to Part 15 of the FCC Rules. These limits are designed to provide reasonable protection against harmful interference in a residential installation. This equipment generates, uses and can radiate radio frequency energy and, if not installed and used in accordance with the instructions, may cause harmful interference to radio communications. However, there is no guarantee that interference will not occur in a particular installation.

If this equipment does cause harmful interference to radio or television reception, which can be determined by turning the equipment off and on, the user is encouraged to try to correct the interference by one or more of the following measures:

- Reorient or relocate the receiving antenna.
- Increase the separation between the equipment and receiver.
- Connect the equipment into an outlet on a circuit different from that to which the receiver is connected.
- Consult the dealer or an experienced radio/TV technician for help.

FCC Radiation Exposure Statement

This equipment complies with FCC radiation exposure limits set forth for an uncontrolled environment. This equipment should be installed and operated with minimum distance

20cm between the radiator and your body. This transmitter must not be co-located or operating in conjunction with any other antenna or transmitter.

ISED Compliance Statement

This device contains license-exempt transmitter(s)/receiver(s) that comply with Innovation, Science and Economic Development Canada's license-exempt RSS(s). Operation is subject to the following two conditions:

- This device may not cause interference.
- This device must accept any interference, including interference that may cause undesired operation of the device.

L'émetteur/récepteur exempt de licence contenu dans le présent appareil est conforme aux CNR d'Innovation, Sciences et Développement économique Canada applicables aux appareils radio exempts de licence. L'exploitation est autorisée aux deux conditions suivantes:

- L'appareil ne doit pas produire de brouillage
- L'appareil doit accepter tout brouillage radioélectrique subi, même si le brouillage est susceptible d'en compromettre le fonctionnement.

ISED Radiation Exposure Statement

This equipment complies with IC RSS-102 radiation exposure limits set forth for an uncontrolled environment. This equipment should be installed and operated with minimum distance 20cm between the radiator and your body.

Cet équipement est conforme aux limites d'exposition aux radiations IC CNR-102 établies pour un environnement non contrôlé. Cet équipement doit être installé et utilisé avec une distance minimale de 20cm entre le radiateur et votre corps.

Environmental Compliance (WEEE and Packaging)

LANDI P20-R is labeled in accordance with European Directives 2012/19/EU concerning Waste Electrical and Electronic Equipment (WEEE) and 2013/56/EC concerning Batteries and Accumulators. Those provisions are requiring producers and manufacturers to become liable for take-back, treatment and recycling upon end of life of equipment and batteries.

The crossed-out wheeled bin symbol on the product or accessories indicates it is considered electronic equipment waste (WEEE) which must be properly disposed of and should not be thrown away. Spent batteries must also be collected separately for recycling.

Please contact your retailer for more details on the take-back and recycling program in place for disposing of old equipment and batteries. Participating ensures their responsible re-use and recycling, which benefits both the environment and human health.

The Green Dot symbol on the packaging confirms it complies with Directive 94/62/EC concerning packaging and packaging waste. Packaging bearing this symbol must be returned through collection schemes managed by accredited Green Dot organizations for recovery and recycling.

RF Compliance

BE	BG	CZ	DK	DE	EE	IE	EL	UK(NI)
ES	FR	HR	IT	CY	LV	LT	LU	
HU	MT	NL	AT	PL	PT	RO	SI	
SK	FI	SE	NO	IS	LI	CH	TR	

The functions of Wireless Access Systems including Radio Local Area Networks (WAS/RLANs) within the band 5150-5350 MHz for this device are restricted to indoor use only within all European Union countries

Accessibility Compliance

The physical keyboard features a 12-key layout complemented by three function keys. The number 5 key, positioned at the center of the keypad, is equipped with a prominent Tactile Bump to enhance the user's tactile recognition capabilities, ensuring compliance with Accessibility standards.

This design provides excellent Tactile Recognizability. The bumped center key serves as a physical reference point, helping users quickly differentiate the function keys. This fulfills the requirement for "tactile discernibility" as stipulated in accessibility directives EN 301 549 and EU 2019/882. As a result, this design enables users with visual impairments or low vision to accurately identify key positions by touch, eliminating the need for visual operation and thereby enhancing the product's operability and inclusivity.

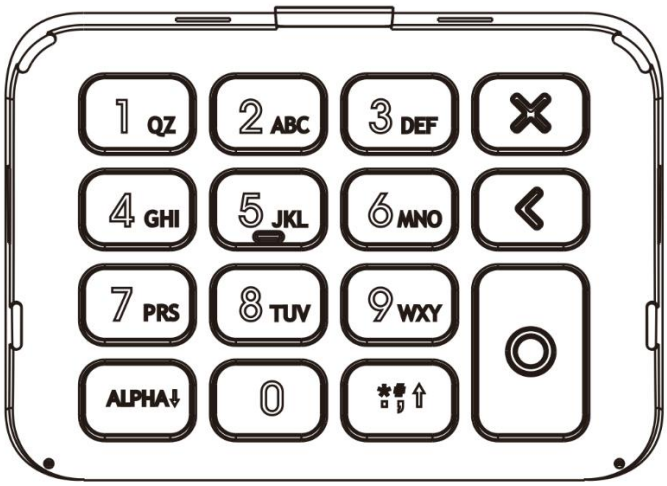

10. Customer Support

- **Data Backup**

Please back up all terminal data before requesting any after-sales support. LANDI does not back up data directly from terminals received for service work. We are not responsible for any data loss or deletion that may occur.

- **Repairs**

Please contact local distributors or LANDI after-sales team to arrange a repair. Be sure to keep your invoice or other valid proof of purchase documentation and present it when necessary.

- **Manufacturer**

Fujian LANDI Commercial Equipment Co., Ltd.

Correspondence Address: 5th & 6th Floor, Building 3A, Area A, Software Park, No.89, Software Avenue, Gulou District, Fuzhou, Fujian, 350001, China

Registered Address: Building 17, Area A, Software Park, No.89, Software Avenue, Gulou District, Fuzhou, Fujian, 350003, China

Phone: +86 0591-88077077, +86 400-658-0616

Fax: +86 0591-88077085

Website: http://www.landicorp.com