araknis NETWORKS

OUTDOOR WIRELESS ACCESS POINT

Quick Start Guide

AN-700-AP-O-AC

Federal Communication Commission Interference Statement

This equipment has been tested and found to comply with the limits for a Class B digital device, pursuant to Part 15 of the FCC Rules. These limits are designed to provide reasonable protection against harmful interference in a residential installation. This equipment generates, uses and can radiate radio frequency energy and, if not installed and used in accordance with the instructions, may cause harmful interference to radio communications. However, there is no guarantee that interference will not occur in a particular installation. If this equipment does cause harmful interference to radio or television reception, which can be determined by turning the equipment off and on, the user is encouraged to try to correct the interference by one of the following measures:

- Reorient or relocate the receiving antenna.
- Increase the separation between the equipment and receiver.
- Connect the equipment into an outlet on a circuit different from that to which the receiver is connected.
- Consult the dealer or an experienced radio/TV technician for help.

FCC Caution: Any changes or modifications not expressly approved by the party responsible for compliance could void the user's authority to operate this equipment.

This device complies with Part 15 of the FCC Rules. Operation is subject to the following two conditions: (1) This device may not cause harmful interference, and (2) this device must accept any interference received, including interference that may cause undesired operation.

This transmitter must not be co-located or operating in conjunction with any other antenna or transmitter.

© 2017 Araknis Networks®

FCC Warning, Continued

IMPORTANT NOTE:

FCC Radiation Exposure Statement:

This equipment complies with FCC radiation exposure limits set forth for an uncontrolled environment. This equipment should be installed and operated with minimum distance 30cm between the radiator & your body.

Industry Canada Statement

This device complies with ISED's licence-exempt RSSs. Operation is subject to the following two conditions: (1) This device may not cause harmful interference, and (2) this device must accept any interference received, including interference that may cause undesired operation.

Le présent appareil est conforme aux CNR d' ISED applicables aux appareils radio exempts de licence. L'exploitation est autorisée aux deux conditions suivantes : (1) le dispositif ne doit pas produire de brouillage préjudiciable, et (2) ce dispositif doit accepter tout brouillage reçu, y compris un brouillage susceptible de provoquer un fonctionnement indésirable.

Industry Canada Statement, Continued

Caution:

(i) the device for operation in the band 5150-5250 MHz is only for indoor use to reduce the potential for harmful interference to co-channel mobile satellite systems;

(ii) the maximum antenna gain permitted for devices in the band 5725-5850 MHz shall be such that the equipment still complies with the e.i.r.p. limits specified for point-to-point and non-point-to-point operation as appropriate; and

(iii) Users should also be advised that high-power radars are allocated as primary users (i.e. priority users) of the bands 5650-5850 MHz and that these radars could cause interference and/or damage to LE-LAN devices.

Avertissement:

(i) les dispositifs fonctionnant dans la bande 5150-5250 MHz sont réservés uniquement pour une utilisation à l'intérieur afin de réduire les risques de brouillage préjudiciable aux systèmes de satellites mobiles utilisant les mêmes canaux;

(ii) le gain maximal d'antenne permis (pour les dispositifs utilisant la bande de 5725 à 5 850 MHz) doit être conforme à la limite de la p.i.r.e. spécifiée pour l'exploitation point à point et l'exploitation non point à point, selon le cas;

(iii) De plus, les utilisateurs devraient aussi être avisés que les utilisateurs de radars de haute puissance sont désignés utilisateurs principaux (c.-à-d., qu'ils ont la priorité) pour les bandes 5650-5850 MHz et que ces radars pourraient causer du brouillage et/ou des dommages aux dispositifs LAN-EL.

© 2017 Araknis Networks®

Industry Canada Statement, Continued

Radiation Exposure Statement:

This equipment complies with ISED radiation exposure limits set forth for an uncontrolled environment. This equipment should be installed and operated with minimum distance 35cm between the radiator & your body.

Déclaration d'exposition aux radiations:

Cet équipement est conforme aux limites d'exposition aux rayonnements ISED établies pour un environnement non contrôlé. Cet équipement doit être installé et utilisé avec un minimum de 35 cm de distance entre la source de rayonnement et votre corps.

Welcome to Araknis Networks™

Thank you for choosing an Araknis™ Outdoor Wireless Access Point (WAP). With sleek, unobtrusive housings, extensive features, unique easy setup, and convenient PoE power, these products are ideal for use in both residential and commercial applications.

Features

- IP55 weather resistant
- Versatile mounting
- Bottom or rear cable entrance
- PoE+ powered only (no DC input)
- 3x3 Wireless-AC
- Kensington lock hole for added security

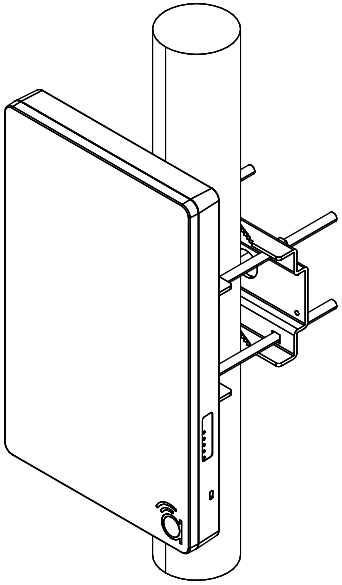

Outdoor Installation Guidelines

- For wall mount, position at least 24″ (60cm) away from eve or ceiling edge.
- Cable feed opening must be directed away from the open environment.
- Cable feed must be pointed down when wall-mounted.
- Shielded Cat 5 cable or above is recommended for outdoor installation and should be grounded through the AC ground of the PoE.
- Operating Temperature Range: -20-55° C
- Storage Temperature Range: -30-80° C

© 2017 Araknis Networks®

Step 1: Unbox

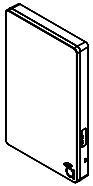

Wireless Access Point (WAP)

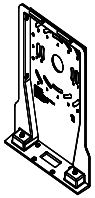

Mounting Bracket

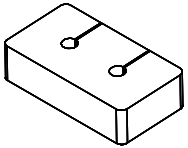

Inner Foam Cable Inserts (2*)

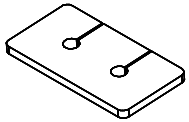

Bracket Cable Inserts (2*)

Rubber Weep Hole Plugs (10)

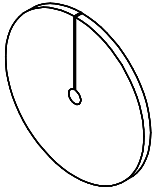

Rear Bracket Foam Inserts (2*)

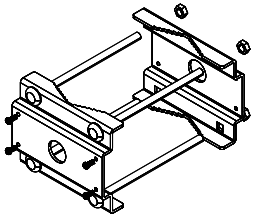

AN-ACC-AP-O-POLE Accessory Pole Mount (not included, sold separately)

Wall Mount Hardware (4 each screws & anchors)

*Includes one gasket each for small or large diameter cables. Use the size that fits your cable best.

Step 2: (Optional) Install Pole Mount Accessory

The AN-ACC-AP-O-POLE accessory mount can be purchased separately and used to securely attach the access point to a pole 1.5-3.1″ in diameter.

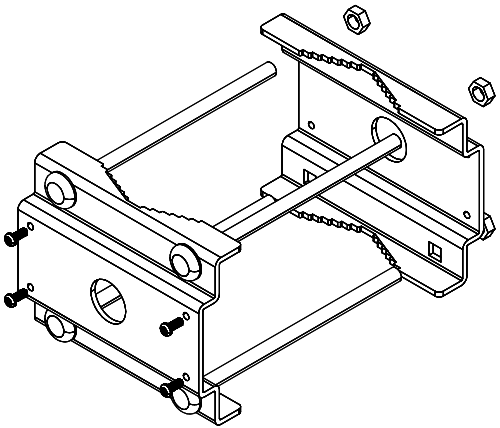

Tighten the clamp nuts enough to prevent unwanted side-to-side movement without damaging the pole or clamps.

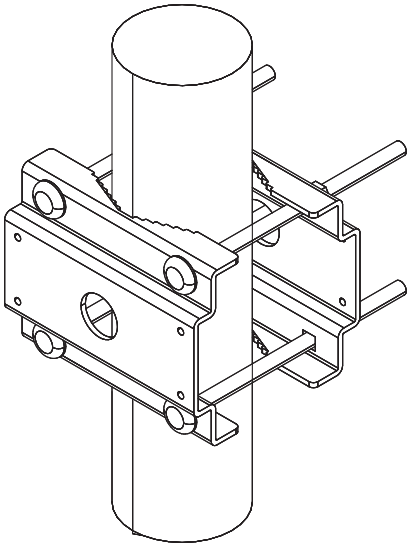

© 2017 Araknis Networks®

Step 3: Mount the Bracket

Ⓐ Prepare Bracket

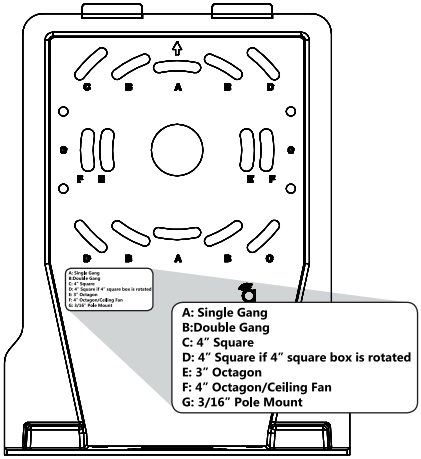

Drill only the mounting holes required for your install.

Ⓑ Mount Bracket

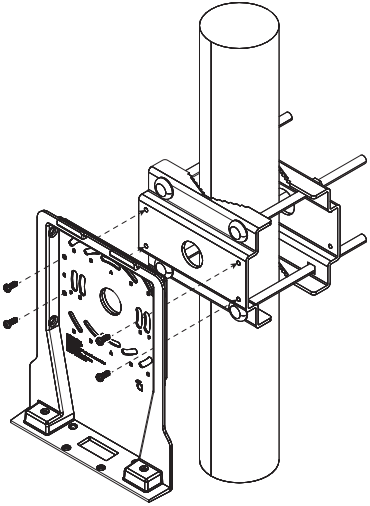

Pole mounting shown for reference. For surface mounting, fasten to the surface using the included screws and anchors.