EMTEK
Access to the World

FCC 47 CFR PART 15 SUBPART C

CERTIFICATION TEST REPORT

For

REMOTE CONTROL FLIGHT VEHICLE SERIES

MODEL No.: 301, 302, 303, 305, 307, 309, 310, 501, 502, 503, 505, 507, 509, 510,701, 702, 703, 705, 707, 709, 710, 901, 902, 903, 904, 905, 906, 907, 908, 909, 910, 901A, 902A, 903A, 904A, 905A, 906A, 907A, 908A, 909A, 910A, 901S, 902S, 903S, 904S, 905S, 906S, 907S, 908S, 909S, 910S, 901G, 902G, 903G, 904G, 905G, 906G, 907G, 908G, 909G, 910G, 901H, 902H, 903H, 904H, 905H, 906H, 907H, 908H, 909H, 910H, AA0150, AA0151, AA0170, AA0178, AA0179, ZQ0420, ZQ0650, ZQ0660

FCC ID: 2AG7S0420905

Trade Mark: N/A

REPORT NO.: ES160108008E

ISSUE DATE: February 22, 2016

Prepared for

HELIWAY TOYS

Wenguan Road, Chenghai District, Shantou City,
Guangdong Province, China.P.C.515800

Prepared by

EMTEK(SHENZHEN) CO., LTD.

Bldg 69, Majialong Industry Zone, Nanshan District,
Shenzhen, Guangdong, China
TEL: 86-755-26954280
FAX: 86-755-26954282

TABLE OF CONTENTS

1 TEST RESULT CERTIFICATION 3

2 EUT TECHNICAL DESCRIPTION 4

3 SUMMARY OF TEST RESULT 5

4 TEST METHODOLOGY 6

4.1 GENERAL DESCRIPTION OF APPLIED STANDARDS 6
4.2 MEASUREMENT EQUIPMENT USED 6
4.3 DESCRIPTION OF TEST MODES 7

5 FACILITIES AND ACCREDITATIONS 8

5.1 FACILITIES 8
5.2 LABORATORY ACCREDITATIONS AND LISTINGS 8

6 TEST SYSTEM UNCERTAINTY 9

7 SETUP OF EQUIPMENT UNDER TEST 10

7.1 RADIO FREQUENCY TEST SETUP 1 10
7.2 RADIO FREQUENCY TEST SETUP 2 10
7.3 CONDUCTED EMISSION TEST SETUP 12
7.4 BLOCK DIAGRAM CONFIGURATION OF TEST SYSTEM 13
7.5 SUPPORT EQUIPMENT 13

8 TEST REQUIREMENTS 14

8.1 BANDWIDTH TEST 14
8.2 FREQUENCY STABILITY 17
8.3 RADIATED SPURIOUS EMISSION 19
8.4 CONDUCTED EMISSIONS TEST 35
8.5 ANTENNA APPLICATION 36

1 TEST RESULT CERTIFICATION

Applicant: HELIWAY TOYS
Wenguan Road, Chenghai District, Shantou City, Guangdong Province, China.P.C.515800

Manufacturer: HELIWAY TOYS
Wenguan Road, Chenghai District, Shantou City, Guangdong Province, China.P.C.515800

EUT Description: REMOTE CONTROL FLIGHT VEHICLE SERIES

Model Number: 301, 302, 303, 305, 307, 309, 310, 501, 502, 503, 505, 507, 509, 510,701, 702, 703, 705, 707, 709, 710, 901, 902, 903, 904, 905, 906, 907, 908, 909, 910, 901A, 902A, 903A, 904A, 905A, 906A, 907A, 908A, 909A, 910A, 901S, 902S, 903S, 904S, 905S, 906S, 907S, 908S, 909S, 910S, 901G, 902G, 903G, 904G, 905G, 906G, 907G, 908G, 909G, 910G, 901H, 902H, 903H, 904H, 905H, 906H, 907H, 908H, 909H, 910H, AA0150, AA0151, AA0170, AA0178, AA0179, ZQ0420, ZQ0650, ZQ0660
(Note: These models are identical in circuitry and electrical, mechanical and physical construction; the only differences are the appearance and model no. for trading purpose. We prepare 905 for test, and the worst result recorded in the report.)

File Number: ES160108008E

Date of Test: January 10, 2016 to February 22, 2016

Measurement Procedure Used:

APPLICABLE STANDARDS	
STANDARD	**TEST RESULT**
FCC 47 CFR Part 2, Subpart J FCC 47 CFR Part 15, Subpart C	PASS

The above equipment was tested by EMTEK(SHENZHEN) CO., LTD. The test data, data evaluation, test procedures, and equipment configurations shown in this report were made in accordance with the procedures given in ANSI C63.10 (2013) and the energy emitted by the sample EUT tested as described in this report is in compliance with the requirements of FCC Rules Part 2 and Part 15.249

The test results of this report relate only to the tested sample identified in this report.

Date of Test : January 10, 2016 to February 22, 2016

Prepared by : Rui Zhou /Editor

Reviewer : Yaping Shen /Supervisor

Approve & Authorized Signer : Lisa Wang/Manager

2 EUT TECHNICAL DESCRIPTION

Characteristics	Description
Device Type	2.4GHz ISM Band
Modulation:	GFSK
Operating Frequency Range(s):	2412MHz-2480MHz
Number of Channels:	6 channels
Antenna Type :	Wire Antenna
Power supply:	☒DC supply: DC 9V
	☐Adapter supply:

Note: *for more details, please refer to the User's manual of the EUT.*

3 SUMMARY OF TEST RESULT

FCC Part Clause	Test Parameter	Verdict	Remark
15.207	Conducted Emission	N/A	
15.209	Radiated Emission	PASS	
15.249	Radiated Spurious Emission	PASS	
15.249	Band edge test	PASS	
15.249	20dB Bandwidth	PASS	

NOTE1: N/A (Not Applicable)
NOTE2: The report use radiated measurements in the restricted frequency bands. In addition, the radiated test is also performed to ensure the emissions emanating from the device cabinet also comply with the applicable limits.

RELATED SUBMITTAL(S) / GRANT(S):

This submittal(s) (test report) is intended for FCC ID: 2AG7S0420905 filing to comply with Section 15.249 of the FCC Part 15, Subpart C Rules.
The system is compliance with Subpart B is authorized under a DOC procedure

4 TEST METHODOLOGY

4.1 GENERAL DESCRIPTION OF APPLIED STANDARDS

According to its specifications, the EUT must comply with the requirements of the following standards:
FCC 47 CFR Part 2, Subpart J
FCC 47 CFR Part 15, Subpart C

4.2 MEASUREMENT EQUIPMENT USED

4.2.1 Conducted Emission Test Equipment

EQUIPMENT TYPE	MFR	MODEL NUMBER	SERIAL NUMBER	LAST CAL.
Test Receiver	Rohde & Schwarz	ESCS30	828985/018	05/16/2015
L.I.S.N.	Schwarzbeck	NNLK8129	8129203	05/16/2015
50Ω Coaxial Switch	Anritsu	MP59B	M20531	N/A
Pulse Limiter	Rohde & Schwarz	ESH3-Z2	100006	05/16/2015
Voltage Probe	Rohde & Schwarz	TK9416	N/A	05/16/2015
I.S.N	Rohde & Schwarz	ENY22	1109.9508.02	05/16/2015

4.2.2 Radiated Emission Test Equipment

EQUIPMENT TYPE	MFR	MODEL NUMBER	SERIAL NUMBER	LAST CAL.
EMI Test Receiver	Rohde & Schwarz	ESU	1302.6005.26	05/16/2015
Pre-Amplifier	HP	8447D	2944A07999	05/16/2015
Bilog Antenna	Schwarzbeck	VULB9163	142	05/16/2015
Loop Antenna	ARA	PLA-1030/B	1029	05/16/2015
Horn Antenna	Schwarzbeck	BBHA 9170	BBHA9170399	05/16/2015
Horn Antenna	Schwarzbeck	BBHA 9120	D143	05/16/2015
Cable	Schwarzbeck	AK9513	ACRX1	05/16/2015
Cable	Rosenberger	N/A	FP2RX2	05/16/2015
Cable	Schwarzbeck	AK9513	CRPX1	05/16/2015
Cable	Schwarzbeck	AK9513	CRRX2	05/16/2015

4.2.3 Radio Frequency Test Equipment

EQUIPMENT TYPE	MFR	MODEL NUMBER	SERIAL NUMBER	LAST CAL.
Spectrum Analyzer	Agilent	E4407B	88156318	05/16/2015
Signal Analyzer	Agilent	N9010A	My53470879	05/16/2015
Power meter	Anritsu	ML2495A	0824006	05/16/2015
Power sensor	Anritsu	MA2411B	0738172	05/16/2015

Remark: *Each piece of equipment is scheduled for calibration once a year.*

4.3 DESCRIPTION OF TEST MODES

The EUT has been tested under its typical operating condition.
The EUT configuration for testing is installed on RF field strength measurement to meet the Commissions requirement and operating in a manner which intends to maximize its emission characteristics in a continuous normal application.

The Transmitter was operated in the normal operating mode. The TX frequency was fixed which was for the purpose of the measurements.

Test of channel included the lowest and middle and highest frequency to perform the test, then record on this report.

Those modulation GFSK were used for all test.

Pre-defined engineering program for regulatory testing used to control the EUT for staying in continuous transmitting and receiving mode is programmed.

☒Frequency and Channel list:

Channel	Frequency (MHz)	Channel	Frequency (MHz)	Channel	Frequency (MHz)
1	2412	2	2439	3	2440
4	2467	5	2477	6	2480

☒Test Frequency and Channel list:

Channel	Frequency (MHz)	Channel	Frequency (MHz)	Channel	Frequency (MHz)
1	2412	3	2440	6	2480

5 FACILITIES AND ACCREDITATIONS

5.1 FACILITIES

All measurement facilities used to collect the measurement data are located at

Bldg 69, Majialong Industry Zone District, Nanshan District, Shenzhen, China
The sites are constructed in conformance with the requirements of ANSI C63.7, ANSI C63.10 and CISPR Publication 22.

5.2 LABORATORY ACCREDITATIONS AND LISTINGS

Site Description

EMC Lab.	:	Accredited by CNAS, 2013.10.29 The certificate is valid until 2016.10.28 The Laboratory has been assessed and proved to be in compliance with CNAS-CL01:2006 (identical to ISO/IEC 17025:2005) The Certificate Registration Number is L2291. Accredited by TUV Rheinland Shenzhen 2015.4 The Laboratory has been assessed according to the requirements ISO/IEC 17025. Accredited by FCC, April 17, 2013 The Certificate Registration Number is 709623. Accredited by FCC, July 24, 2013 The Certificate Registration Number is 406365. Accredited by Industry Canada, November 29, 2012 The Certificate Registration Number is 4480A.
Name of Firm	:	SHENZHEN EMTEK CO., LTD.
Site Location	:	Bldg 69, Majialong Industry Zone, Nanshan District, Shenzhen, Guangdong, China

6 TEST SYSTEM UNCERTAINTY

The following measurement uncertainty levels have been estimated for tests performed on the apparatus:

Parameter	Uncertainty
Radio Frequency	±1x10^-5
Maximum Peak Output Power Test	±1.0dB
Conducted Emissions Test	±2.0dB
Radiated Emission Test	±2.0dB
Power Density	±2.0dB
Occupied Bandwidth Test	±1.0dB
Band Edge Test	±3dB
All emission, radiated	±3dB
Antenna Port Emission	±3dB
Temperature	±0.5℃
Humidity	±3%

Measurement Uncertainty for a level of Confidence of 95%

7 SETUP OF EQUIPMENT UNDER TEST

7.1 RADIO FREQUENCY TEST SETUP 1

The WLAN component's antenna ports(s) of the EUT are connected to the measurement instrument per an appropriate attenuator. The EUT is controlled by PC/software to emit the specified signals for the purpose of measurements.

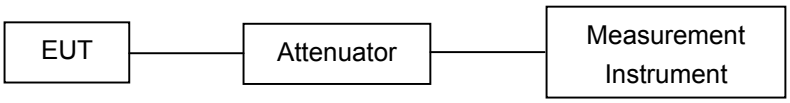

7.2 RADIO FREQUENCY TEST SETUP 2

The test site semi-anechoic chamber has met the requirement of NSA tolerance 4 dB according to the standards: ANSI C63.10. The test distance is 3m.The setup is according to the requirements in Section 13.1.4.1 of ANSI C63.10-2013 and CAN/CSA-CEI/IEC CISPR 22.

Below 30MHz：
The EUT is placed on a turntable 0.8 meters above the ground in the chamber, 3 meter away from the antenna (loop antenna). The Antenna should be positioned with its plane vertical at the specified distance from the EUT and rotated about its vertical axis for maximum response at each azimuth about the EUT. The center of the loop shall be 1 m above the ground. For certain applications, the loop antenna plane may also need to be positioned horizontally at the specified distance from the EUT.

Above 30MHz：
The EUT is placed on a turntable 0.8 meters above the ground in the chamber, 3 meter away from the antenna. The maximal emission value is acquired by adjusting the antenna height, polarisation and turntable azimuth. Normally, the height range of antenna is 1 m to 4 m, the azimuth range of turntable is 0° to 360°, and the receive antenna has two polarizations Vertical (V) and Horizontal (H).

Above 1GHz：
(Note: the FCC's permission to use 1.5m as an alternative per TCBC Conf call of Dec. 2, 2014.)
The EUT is placed on a turntable 1.5 meters above the ground in the chamber, 3 meter away from the antenna. The maximal emission value is acquired by adjusting the antenna height, polarisation and turntable azimuth. Normally, the height range of antenna is 1 m to 4 m, the azimuth range of turntable is 0° to 360°, and the receive antenna has two polarizations Vertical (V) and Horizontal (H).

(a) Radiated Emission Test Set-Up, Frequency Below 30MHz

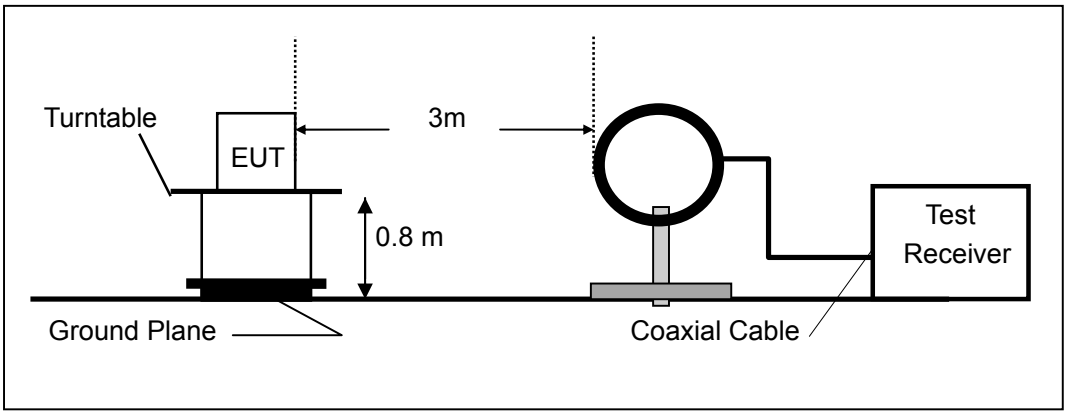

(b) Radiated Emission Test Set-Up, Frequency Below 1000MHz

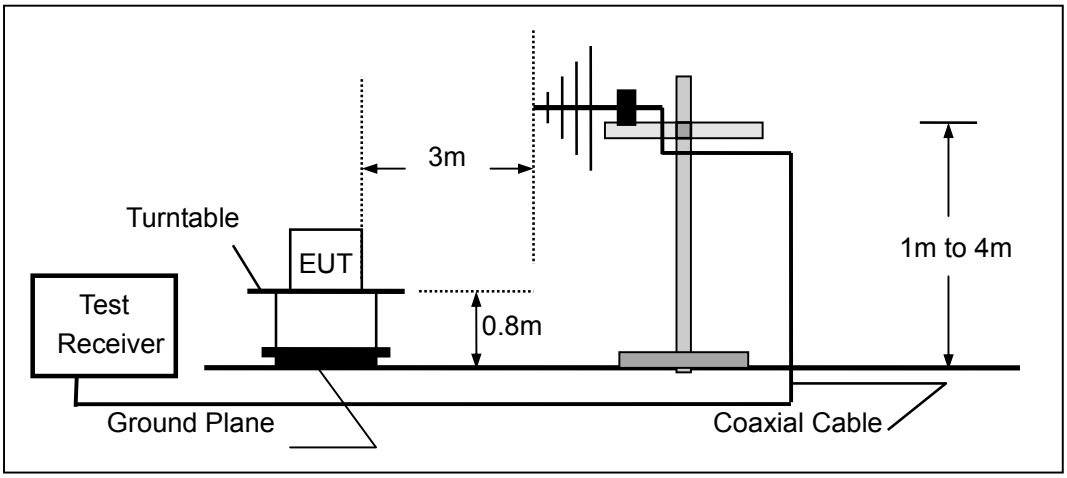

(c) Radiated Emission Test Set-Up, Frequency above 1000MHz

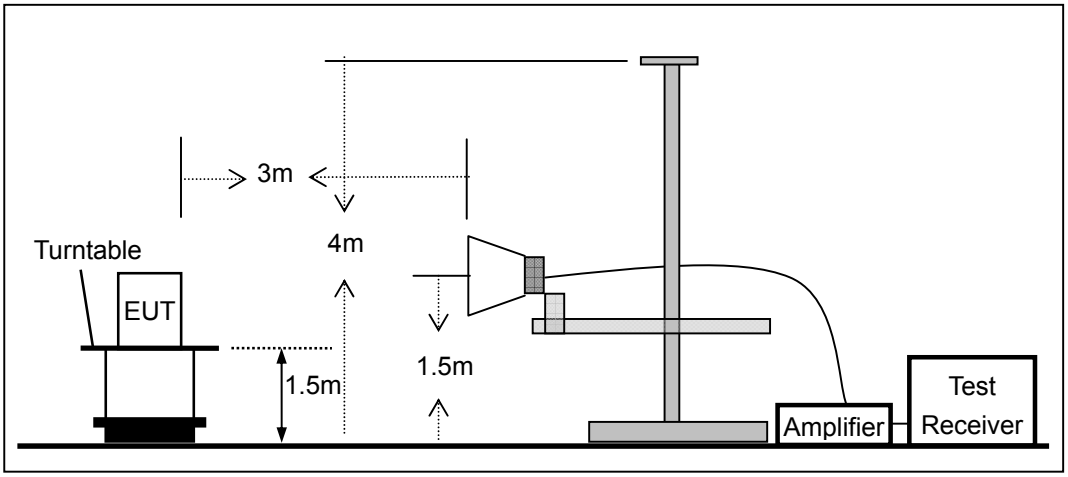

7.3 CONDUCTED EMISSION TEST SETUP

The mains cable of the EUT (maybe per AC/DC Adapter) must be connected to LISN. The LISN shall be placed 0.8 m from the boundary of EUT and bonded to a ground reference plane for LISN mounted on top of the ground reference plane. This distance is between the closest points of the LISN and the EUT. All other units of the EUT and associated equipment shall be at least 0.8m from the LISN.

Ground connections, where required for safety purposes, shall be connected to the reference ground point of the LISN and, where not otherwise provided or specified by the manufacturer, shall be of same length as the mains cable and run parallel to the mains connection at a separation distance of not more than 0.8 m.

According to the requirements in Section 13.1.4.1 of ANSI C63.10-2013 Conducted emissions from the EUT measured in the frequency range between 0.15 MHz and 30 MHz using CISPR Quasi-Peak and average detector mode.

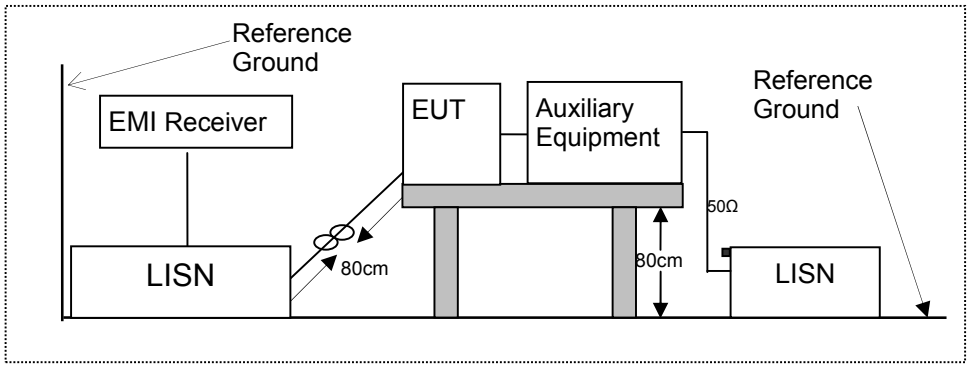

7.4 BLOCK DIAGRAM CONFIGURATION OF TEST SYSTEM

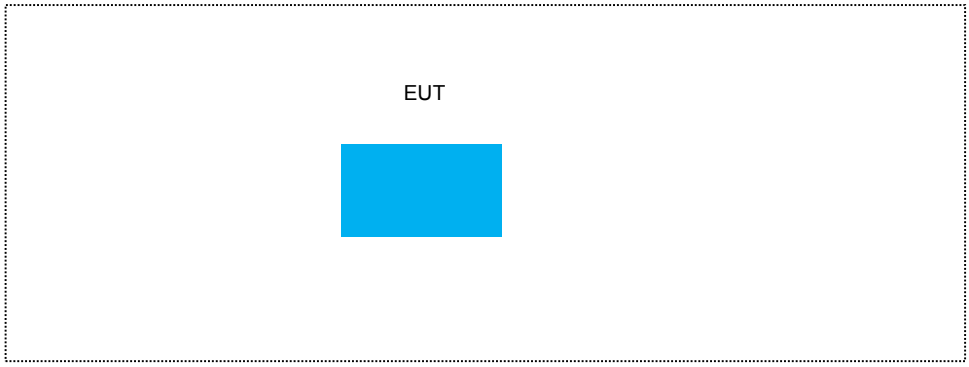

7.5 SUPPORT EQUIPMENT

Item	Equipment	Mfr/Brand	Model/Type No.	FCC ID	Series No.	Note
N/A	N/A	N/A	N/A	N/A	N/A	N/A

Notes:

1. *All the equipment/cables were placed in the worst-case configuration to maximize the emission during the test.*
2. *Grounding was established in accordance with the manufacturer's requirements and conditions for the intended use.*

8 TEST REQUIREMENTS

8.1 BANDWIDTH TEST

8.1.1 Applicable Standard

According to FCC Part 15.249

8.1.2 Conformance Limit

N/A

8.1.3 Test Configuration

Test according to clause 7.1 radio frequency test setup 1

8.1.4 Test Procedure

The EUT was operating in controlled its channel. Printed out the test result from the spectrum by hard copy function.
The RF output of EUT was connected to the spectrum analyzer by RF cable and attenuator. The path loss was compensated to the results for each measurement.
Set to the maximum power setting and enable the EUT transmit continuously
Set RBW = 30 kHz.
Set the video bandwidth (VBW) =100kHz.
Set Span≥2 times OBW
Set Detector = Peak.
Set Trace mode = max hold.
Set Sweep = auto couple.
Allow the trace to stabilize.
Measure the maximum width of the emission that is constrained by the frequencies associated with the two outermost amplitude points (upper and lower frequencies) that are attenuated by 20 dB relative to the maximum level measured in the fundamental emission.
Measure and record the results in the test report.

8.1.5 Test Results

Temperature :	28℃	Test Date :	February 22, 2016
Humidity :	65 %	Test By:	King Kong

Operation Mode	Channel Number	Channel Frequency (MHz)	Measurement Bandwidth (KHz)	Limit (kHz)	Verdict
GFSK	1	2412.0	811.6	500	PASS
	3	2440.0	811.4	500	PASS
	6	2480.0	1259.0	500	PASS

Test Model	Bandwidth Test GFSK

Test Model	Bandwidth Test GFSK

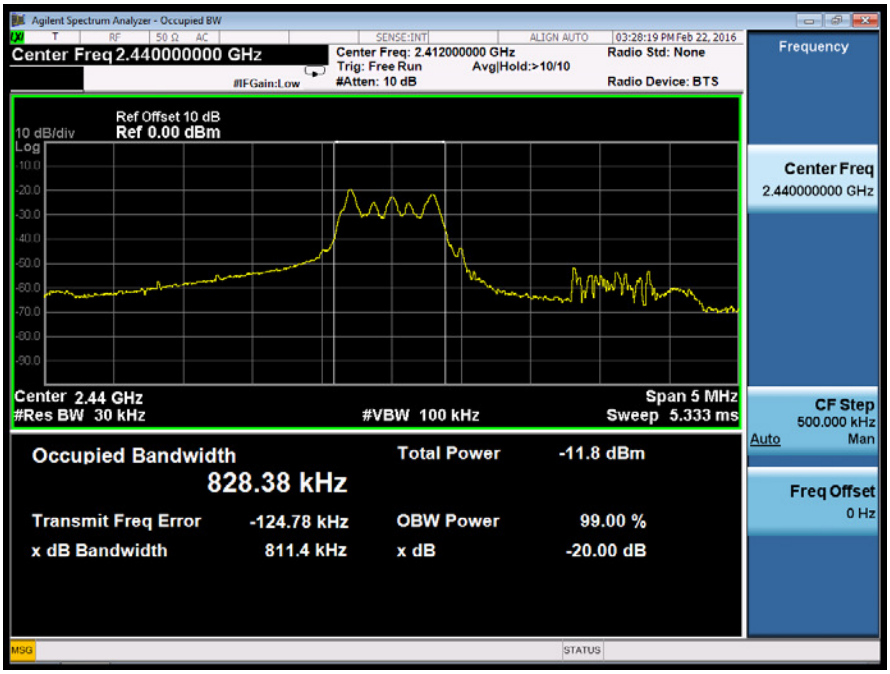

Test Model	Bandwidth Test GFSK

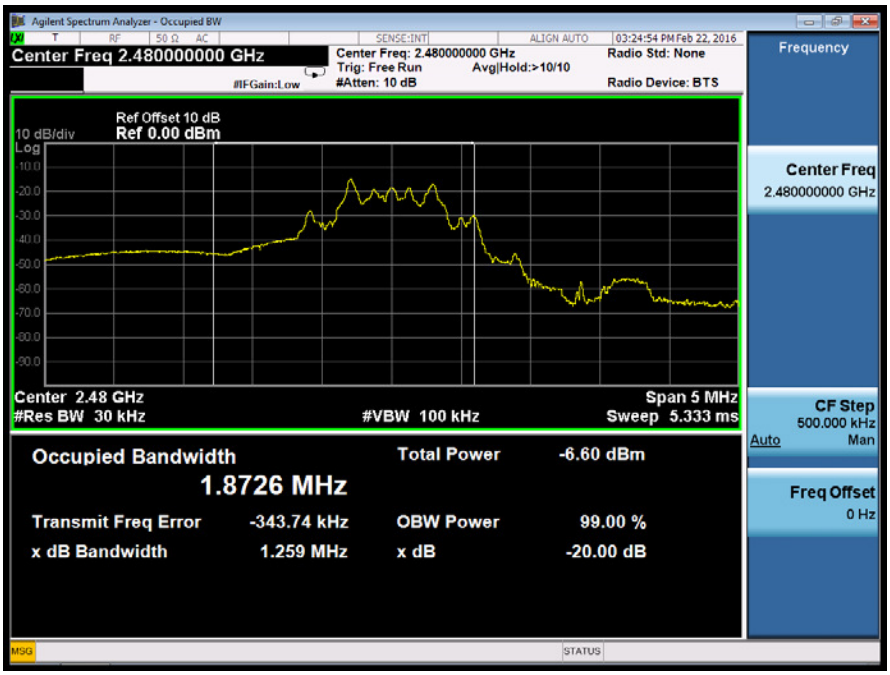

8.2 FREQUENCY STABILITY

8.2.1 Applicable Standard

According to FCC Part 15.249

8.2.2 Conformance Limit

The frequency tolerance of the carrier signal shall be maintained within ±10ppm of the operating frequency over a temperature variation of -20 degrees to + 50 degrees C at normal supply voltage, and for a variation in the primary supply voltage from 85% to 115% of the rated supply voltage at a temperature of 20 degrees C. For battery operated equipment, the equipment tests shall be performed using a new battery.

8.2.3 Test Configuration

Test according to clause 6.1 radio frequency test setup

8.2.4 Test Procedure

The RF output of EUT was connected to the spectrum analyzer by RF cable and attenuator. The path loss was compensated to the results for each measurement.
Set to the maximum power setting and enable the EUT transmit continuously
Set RBW = 10 kHz.
Set the video bandwidth (VBW) =30 kHz.
Set Span= Entire absence of modulation emissions bandwidth
Set Detector = Peak.
Set Trace mode = max hold.
Set Sweep = auto couple.
Allow the trace to stabilize.
The test extreme voltage is to change the primary supply voltage from 85 to 115 percent of the nominal value.
Beginning at each temperature level specified in user manual , the frequency shall be measured within one minute after application of primary power to the transmitter and at intervals of no more than one minute thereafter until ten minutes have elapsed or until sufficient measurements are obtained to indicate clearly that the frequency has stabilized within the applicable tolerance, whichever time period is greater. During each test, the ambient temperature shall not be allowed to rise more than 10° centigrade above the respective beginning ambient temperature level
Measure and record the results in the test report.

8.2.5 Test Results

Temperature :	--	Test Date :	January 19, 2016
Humidity :	65 %	Test By:	King Kong

Channel Number	Test Conditions		Test Frequency (MHz)	Max. Deviation (MHz)	Max. Deviation (ppm)	Verdict
	Voltage(V)	Temp(℃)				
	Vnom	-20				N/A
		-10				N/A
		0				N/A
		10				N/A
		20				N/A
		30				N/A
		40				N/A
		50				N/A
	85% Vnom	20				N/A
	115% Vnom	20				N/A
	Vnom	-20				N/A
		-10				N/A
		0				N/A
		10				N/A
		20				N/A
		30				N/A
		40				N/A
		50				N/A
	85% Vnom	20				N/A
	115% Vnom	20				N/A
	Vnom	-20				N/A
		-10				N/A
		0				N/A
		10				N/A
		20				N/A
		30				N/A
		40				N/A
		50				N/A
	85% Vnom	20				N/A
	115% Vnom	20				N/A

Note: N/A (Not Applicable)

8.3 RADIATED SPURIOUS EMISSION

8.3.1 Applicable Standard

According to FCC Part 15.249 and 15.209

8.3.2 Conformance Limit

According to FCC Part 15.249: radiated emissions which fall in the restricted bands, as defined in §15.205(a), must also comply with the radiated emission limits specified in §15.209(a) (see §15.205(c)).
According to FCC Part15.205, Restricted bands

MHz	MHz	MHz	GHz
0.090-0.110	16.42-16.423	399.9-410	4.5-5.15
10.495-0.505	16.69475-16.69525	608-614	5.35-5.46
2.1735-2.1905	16.80425-16.80475	960-1240	7.25-7.75
4.125-4.128	25.5-25.67	1300-1427	8.025-8.5
4.17725-4.17775	37.5-38.25	1435-1626.5	9.0-9.2
4.20725-4.20775	73-74.6	1645.5-1646.5	9.3-9.5
6.215-6.218	74.8-75.2	1660-1710	10.6-12.7
6.26775-6.26825	123-138	2200-2300	14.47-14.5
8.291-8.294	149.9-150.05	2310-2390	15.35-16.2
8.362-8.366	156.52475-156.52525	2483.5-2500	17.7-21.4
8.37625-8.38675	156.7-156.9	2690-2900	22.01-23.12
8.41425-8.41475	162.0125-167.17	3260-3267	23.6-24.0
12.29-12.293	167.72-173.2	3332-3339	31.2-31.8
12.51975-12.52025	240-285	3345.8-3358	36.43-36.5
12.57675-12.57725	322-335.4	3600-4400	(2)
13.36-13.41			

According to FCC Part15.205, the level of any transmitter spurious emission in Restricted bands shall not exceed the level of the emission specified in the following table

Restricted Frequency(MHz)	Field Strength (μV/m)	Field Strength (dBμV/m)	Measurement Distance
0.009-0.490	2400/F(KHz)	20 log (uV/m)	300
0.490-1.705	2400/F(KHz)	20 log (uV/m)	30
1.705-30	30	29.5	30
30-88	100	40	3
88-216	150	43.5	3
216-960	200	46	3
Above 960	500	54	3

Remark :1. Emission level in dBuV/m=20 log (uV/m)
2. Measurement was performed at an antenna to the closed point of EUT distance of meters.
3. Distance extrapolation factor =40log(Specific distance/ test distance)(dB);
Limit line=Specific limits(dBuV) + distance extrapolation factor.
for the frequency ranges below 30 MHz, a narrower RBW is used for these ranges but the measured value should add a RBW correction factor (RBWCF) where RBWCF [dB] =10*lg(100 [kHz]/narrower RBW [kHz]). , the narrower RBW is 1 kHz and RBWCF is 20 dB for the frequency 9 kHz to 150 kHz, and the narrower RBW is 10 kHz and RBWCF is 10 dB for the frequency 150 kHz to 30 MHz.

Field strength of fundamental and Field strength of harmonics Limit:

Fundamental frequency	Field strength of fundamental (millivolts/meter)	Field strength of harmonics (microvolts/meter)
902-928 MHz	50(94 dBV/m)	500(54 dBV/m)
2400-2483.5 MHz	50(94 dBV/m)	500(54 dBV/m)
5725-5875 MHz	50(94 dBV/m)	500(54 dBV/m)
24.0-24.25 GHz	250(108 dBV/m)	2500(68 dBV/m)

8.3.3 Test Configuration

Test according to clause 7.2 radio frequency test setup 2

8.3.4 Test Procedure

This test is required for any spurious emission that falls in a Restricted Band, as defined in Section 15.205. It must be performed with the highest gain of each type of antenna proposed for use with the EUT. Use the following spectrum analyzer settings:
For Above 1GHz:
The EUT was placed on a turn table which is 1.5m above ground plane.
Maximum procedure was performed on the highest emissions to ensure EUT compliance.
Span = wide enough to fully capture the emission being measured
RBW = 1 MHz
VBW ≥ RBW
Sweep = auto
Detector function = peak
Trace = max hold
For Below 1GHz:
The EUT was placed on a turn table which is 0.8m above ground plane.
Maximum procedure was performed on the highest emissions to ensure EUT compliance.
Span = wide enough to fully capture the emission being measured
RBW = 100 kHz for
VBW ≥ RBW
Sweep = auto
Detector function = peak
Trace = max hold
For Below 30MHz:
The EUT was placed on a turn table which is 0.8m above ground plane.
Maximum procedure was performed on the highest emissions to ensure EUT compliance.
Span = wide enough to fully capture the emission being measured
RBW = 9kHz
VBW ≥ RBW
Sweep = auto
Detector function = peak
Trace = max hold
For Below 150KHz:
The EUT was placed on a turn table which is 0.8m above ground plane.
Maximum procedure was performed on the highest emissions to ensure EUT compliance.
Span = wide enough to fully capture the emission being measured
RBW = 200Hz
VBW ≥ RBW
Sweep = auto
Detector function = peak
Trace = max hold
Follow the guidelines in ANSI C63.10-2013 with respect to maximizing the emission by rotating the EUT,

measuring the emission while the EUT is situated in three orthogonal planes (if appropriate), adjusting the measurement antenna height and polarization, etc. A pre-amp and a high pass filter are required for this test, in order to provide the measuring system with sufficient sensitivity. Allow the trace to stabilize. The peak reading of the emission, after being corrected by the antenna factor, cable loss, pre-amp gain, etc., is the peak field strength, which must comply with the limit specified in Section 15.35(b). Submit this data.
Now set the VBW to 10 Hz, while maintaining all of the other instrument settings. This peak level, once corrected, must comply with the limit specified in Section 15.209. If the dwell time per channel of the hopping signal is less than 100 ms, then the reading obtained with the 10 Hz VBW may be further adjusted by a "duty cycle correction factor", derived from 20log(dwell time/100 ms), in an effort to demonstrate compliance with the 15.209 limit. Submit this data.
Repeat above procedures until all frequency measured was complete.

8.3.5 Test Results

- Spurious Emission below 30MHz (9KHz to 30MHz)

Temperature:	24℃	Test Date:	January 20, 2016
Humidity:	53 %	Test By:	King Kong
Test mode:	TX Mode		

Freq. (MHz)	Ant.Pol.	Emission Level(dBuV/m)		Limit 3m(dBuV/m)		Over(dB)	
	H/V	PK	AV	PK	AV	PK	AV
--	--	--	--	--	--	--	--

Note: the amplitude of spurious emission that is attenuated by more than 20dB below the permissible limit has no need to be reported.
Distance extrapolation factor =40log(Specific distance/ test distance)(dB);
Limit line=Specific limits(dBuV) + distance extrapolation factor

■ Spurious Emission Above 1GHz (1GHz to 25GHz)

Temperature :	28℃	Test Date :	January 20, 2016
Humidity :	65 %	Test By:	King Kong
Test mode:	GFSK	Frequency:	2412 MHZ

Freq. (MHz)	Ant.Pol. H/V	Emission Level(dBuV/m) PK	AV	Limit 3m(dBuV/m) PK	AV	Over(dB) PK	AV
4821.55	V	53.72	40.73	74.00	54.00	-20.28	-13.27
7234.35	V	50.91	38.34	74.00	54.00	-23.09	-15.66
9646.04	V	51.06	37.40	74.00	54.00	-22.94	-16.60
--	--	--	--	--	--	--	--
--	--	--	--	--	--	--	--
--	--	--	--	--	--	--	--
4819.01	H	54.87	41.52	74.00	54.00	-19.13	-12.48
7236.41	H	51.37	38.95	74.00	54.00	-22.63	-15.05
9643.15	H	46.66	33.68	74.00	54.00	-27.34	-20.32

Temperature :	28℃	Test Date :	January 20, 2016
Humidity :	65 %	Test By:	King Kong
Test mode:	GFSK	Frequency:	2440 MHZ

Freq. (MHz)	Ant.Pol. H/V	Emission Level(dBuV/m) PK	AV	Limit 3m(dBuV/m) PK	AV	Over(dB) PK	AV
4875.07	V	54.63	41.21	74.00	54.00	-19.37	-12.79
7313.98	V	52.05	38.48	74.00	54.00	-21.95	-15.52
9746.24	V	51.01	37.83	74.00	54.00	-22.99	-16.17
--	--	--	--	--	--	--	--
--	--	--	--	--	--	--	--
--	--	--	--	--	--	--	--
4874.78	H	50.18	38.84	74.00	54.00	-23.82	-15.16
7311.12	H	51.08	37.97	74.00	54.00	-22.92	-16.03
9747.64	H	48.62	37.78	74.00	54.00	-25.38	-16.22

Temperature :	28℃	Test Date :	January 20, 2016
Humidity :	65 %	Test By:	King Kong
Test mode:	GFSK	Frequency:	2480 MHZ

Freq. (MHz)	Ant.Pol. H/V	Emission Level(dBuV/m) PK	AV	Limit 3m(dBuV/m) PK	AV	Over(dB) PK	AV
4936.94	V	55.63	41.68	74.00	54.00	-18.37	-12.32
7463.47	V	51.94	39.26	74.00	54.00	-22.06	-14.74
9885.94	V	51.02	37.87	74.00	54.00	-22.98	-16.13
--	--	--	--	--	--	--	--
--	--	--	--	--	--	--	--
--	--	--	--	--	--	--	--
4937.10	H	53.98	40.96	74.00	54.00	-20.02	-13.04
7463.78	H	48.44	37.07	74.00	54.00	-25.56	-16.93
9887.57	H	45.87	31.09	74.00	54.00	-28.13	-22.91

Note: (1) All Readings are Peak Value (VBW=3MHz) and Peak Value (VBW=10Hz).
(2) Emission Level= Reading Level+Probe Factor +Cable Loss.
(3) Data of measurement within this frequency range shown " -- " in the table above means the reading of emissions are attenuated more than 20dB below the permissible limits or the field strength is too small to be measured.

■ Spurious Emission in Restricted Band 2310-2390MHz and 2483.5-2500MHz

Temperature :	28℃	Test Date :	January 20, 2016
Humidity :	65 %	Test By:	King Kong
Test mode:	GFSK	Frequency:	2412 MHZ

Frequency (MHz)	Polarity	PK(dBuV/m) (VBW=3MHz)	Limit 3m (dBuV/m)
2379.440	H	57.62	74.00
2386.560	V	57.69	74.00
Frequency (MHz)	Polarity	PK(dBuV/m) (VBW=10Hz)	Limit 3m (dBuV/m)
2388.401	H	42.92	54.00
2386.320	V	43.33	54.00

Temperature :	28℃	Test Date :	January 20, 2016
Humidity :	65 %	Test By:	King Kong
Test mode:	GFSK	Frequency:	2480 MHZ

Frequency (MHz)	Polarity	PK(dBuV/m) (VBW=3MHz)	Limit 3m (dBuV/m)
2483.830	H	59.00	74.00
2485.662	V	58.08	74.00
Frequency (MHz)	Polarity	PK(dBuV/m) (VBW=10Hz)	Limit 3m (dBuV/m)
2483.550	H	43.88	54.00
2484.474	V	43.89	54.00

Note: (1) All Readings are Peak Value (VBW=3MHz) and Peak Value (VBW=10Hz).
(2) Emission Level= Reading Level+Probe Factor +Cable Loss.
(3) Data of measurement within this frequency range shown " -- " in the table above means the reading of emissions are attenuated more than 20dB below the permissible limits or the field strength is too small to be measured.

Test Model	Spurious Emission in Restricted Band 2310-2390MHz GFSK Channel 1: 2412MHz VBW=3MHz	Polarity: H Test By: King Kong

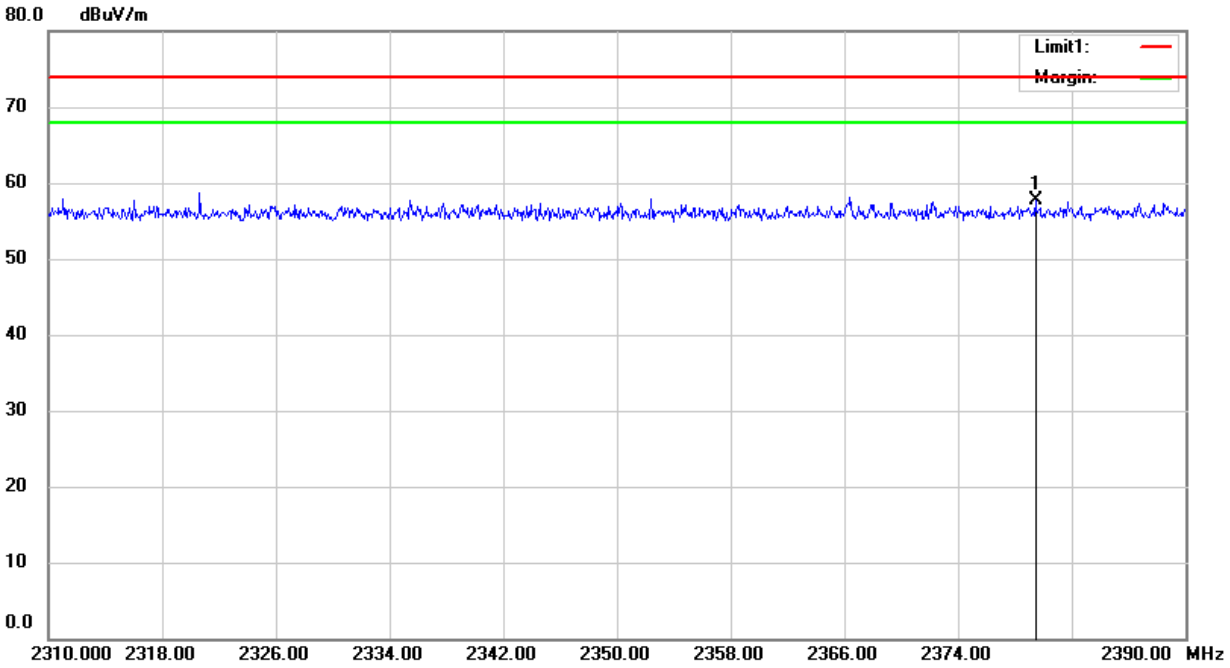

Test Model	Spurious Emission in Restricted Band 2310-2390MHz GFSK Channel 1: 2412MHz VBW=10Hz	Polarity: H Test By: King Kong

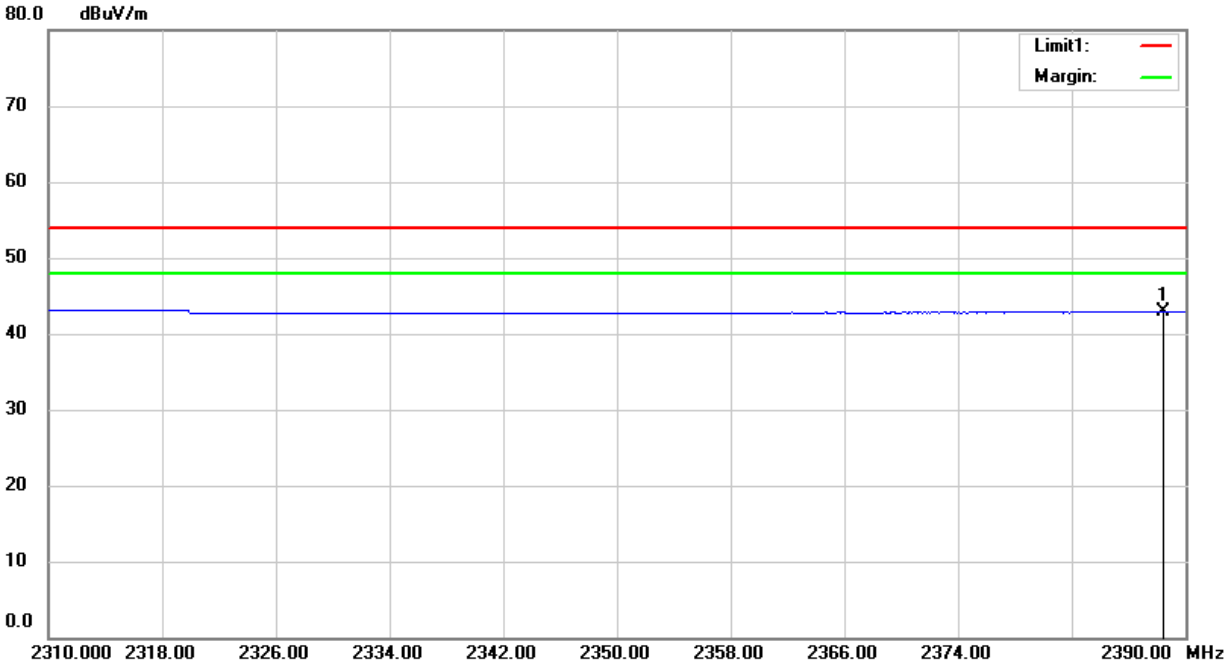

Test Model	Spurious Emission in Restricted Band 2310-2390MHz GFSK Channel 1: 2412MHz VBW=3MHz	Polarity:V Test By: King Kong

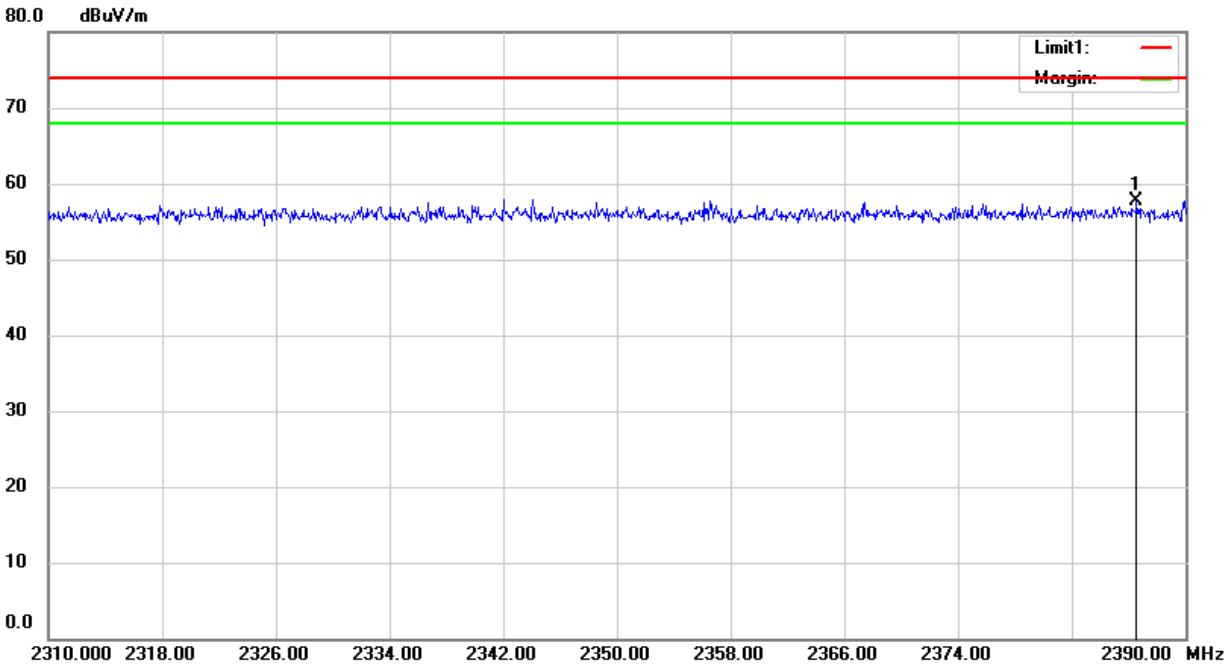

Test Model	Spurious Emission in Restricted Band 2310-2390MHz GFSK Channel 1: 2412MHz VBW=10Hz	Polarity:V Test By: King Kong

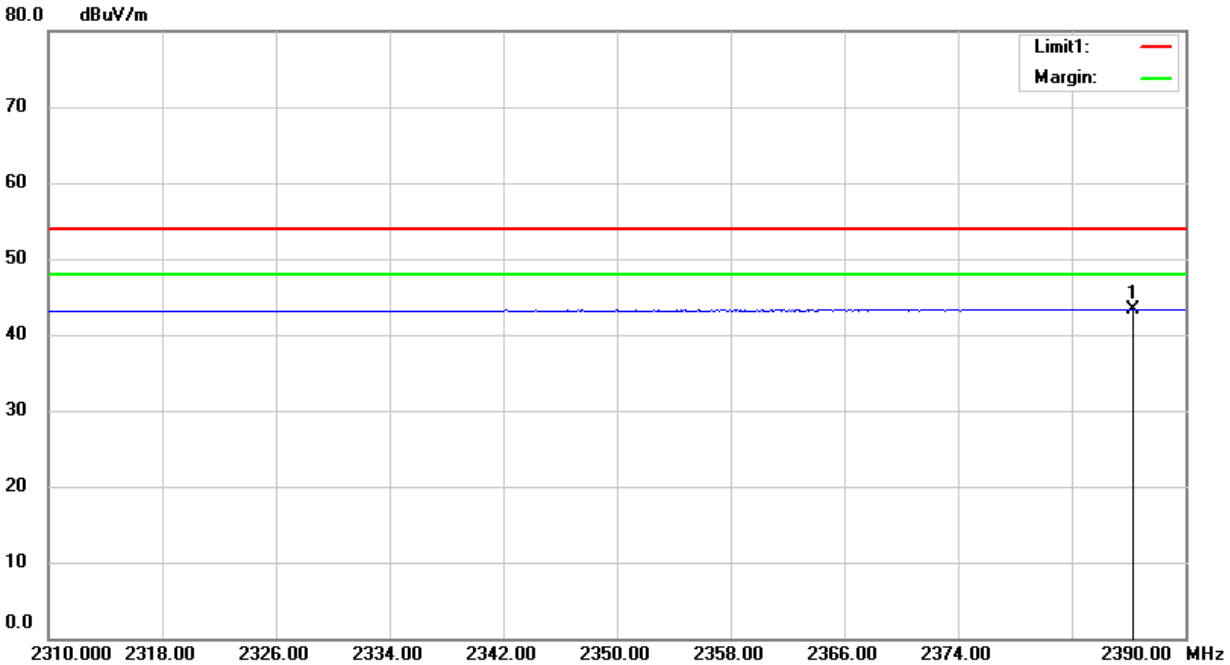

Test Model	Spurious Emission in Restricted Band 2483.5-2500MHz GFSK Channel 11: 2480MHz VBW=3MHz	Polarity: H Test By: King Kong

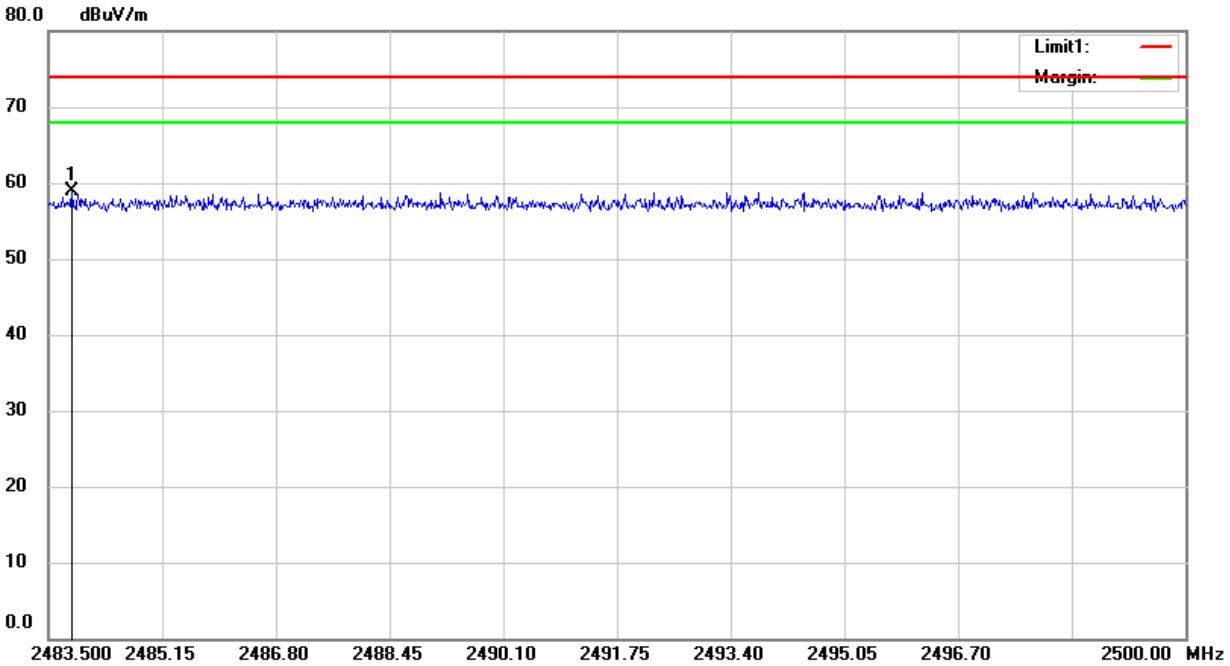

Test Model	Spurious Emission in Restricted Band 2483.5-2500MHz GFSK Channel 11: 2480MHz VBW=10Hz	Polarity: H Test By: King Kong

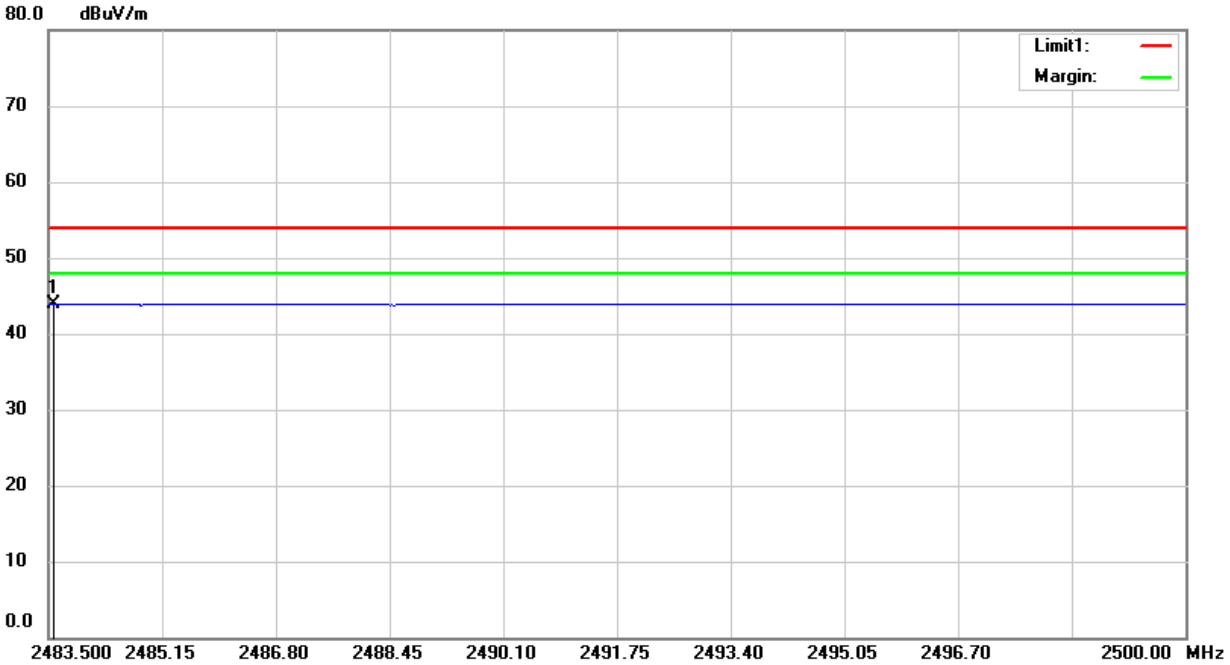

Test Model	Spurious Emission in Restricted Band 2483.5-2500MHz GFSK Channel 11: 2480MHz VBW=3MHz	Polarity: V Test By: King Kong

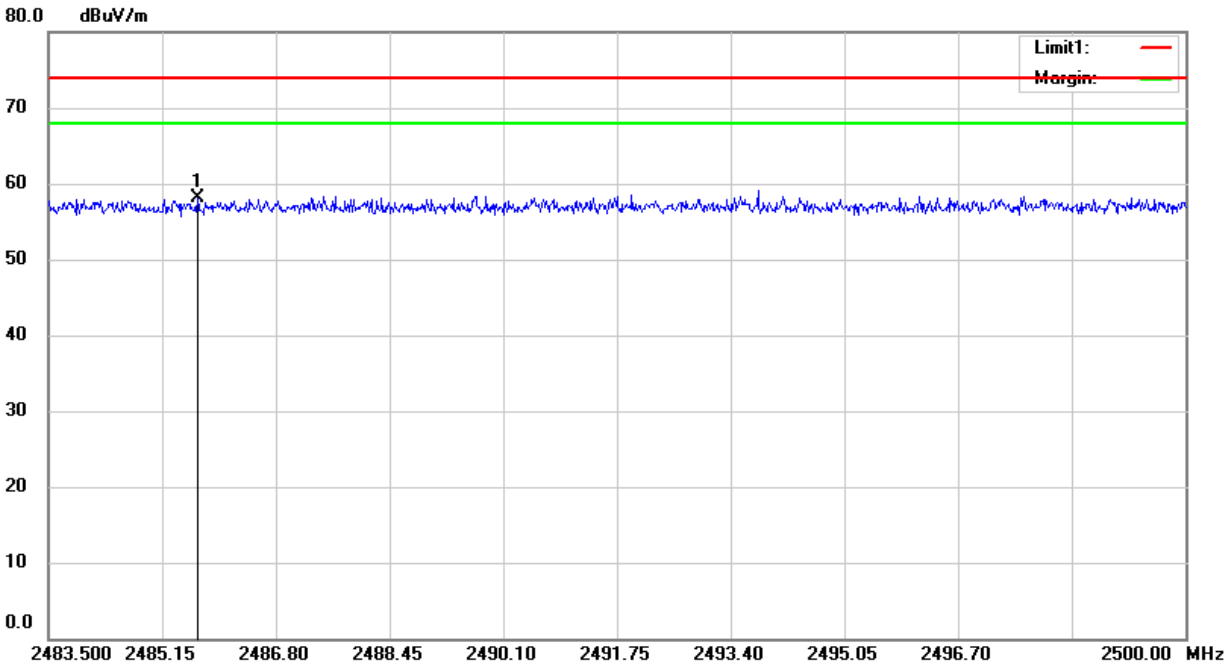

Test Model	Spurious Emission in Restricted Band 2483.5-2500MHz GFSK Channel 11: 2480MHz VBW=10Hz	Polarity: V Test By: King Kong

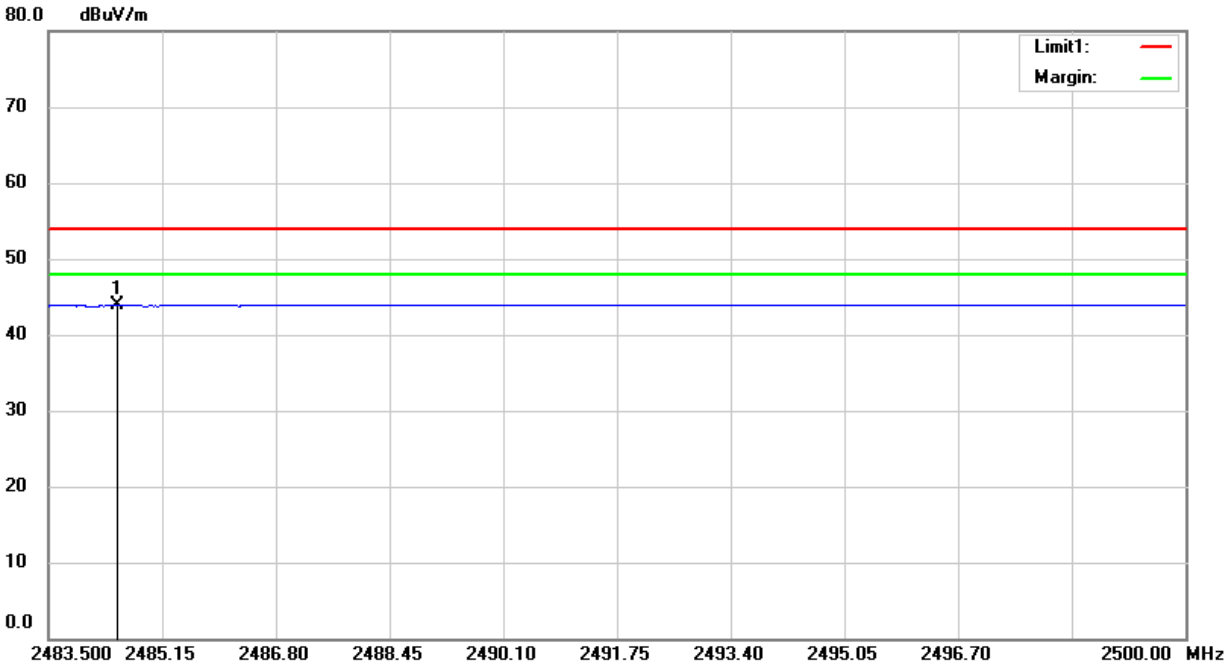

■ Spurious Emission below 1GHz (30MHz to 1GHz)

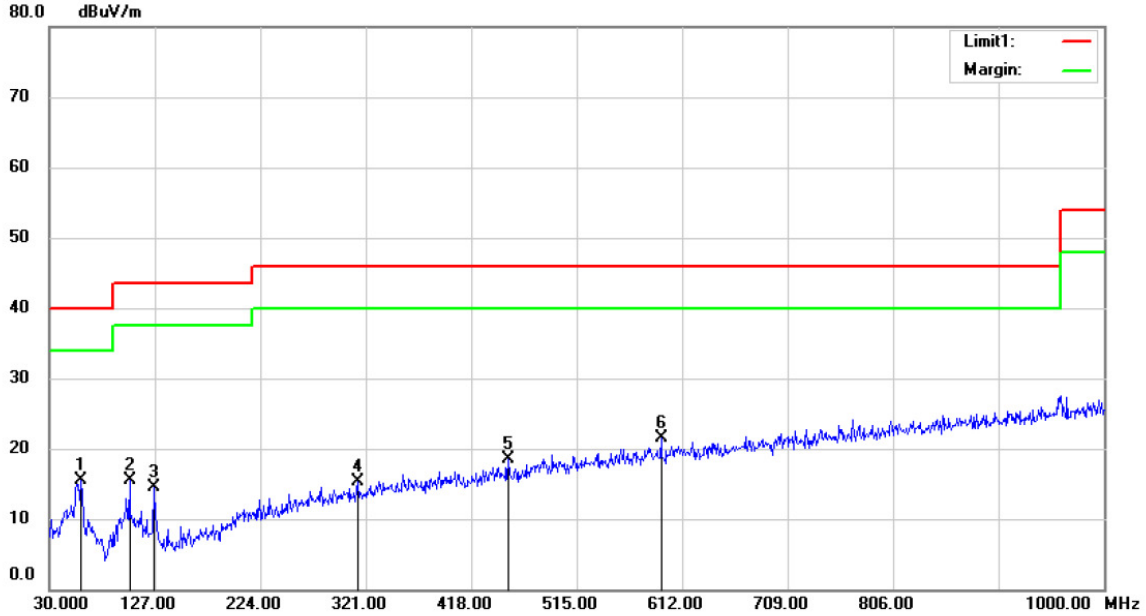

Site 3m Chamber #3 Polarization: *Vertical* Temperature: 24 C

Limit: (RE)FCC PART 15 CLASS B Power: DC 3V Humidity: 53 %

Mode:TX 2412

Note:

No.	Mk.	Freq.	Reading Level	Correct Factor	Measure-ment	Limit	Over		Antenna Height	Table Degree	
		MHz	dBuV	dB	dBuV/m	dBuV/m	dB	Detector	cm	degree	Comment
1	*	59.1000	31.12	-15.60	15.52	40.00	-24.48	QP			
2		103.7200	30.83	-15.30	15.53	43.50	-27.97	QP			
3		126.0300	32.40	-17.89	14.51	43.50	-28.99	QP			
4		313.2400	26.72	-11.43	15.29	46.00	-30.71	QP			
5		451.9500	27.40	-8.81	18.59	46.00	-27.41	QP			
6		592.6000	27.45	-5.97	21.48	46.00	-24.52	QP			

*:Maximum data x:Over limit !:over margin Operator:

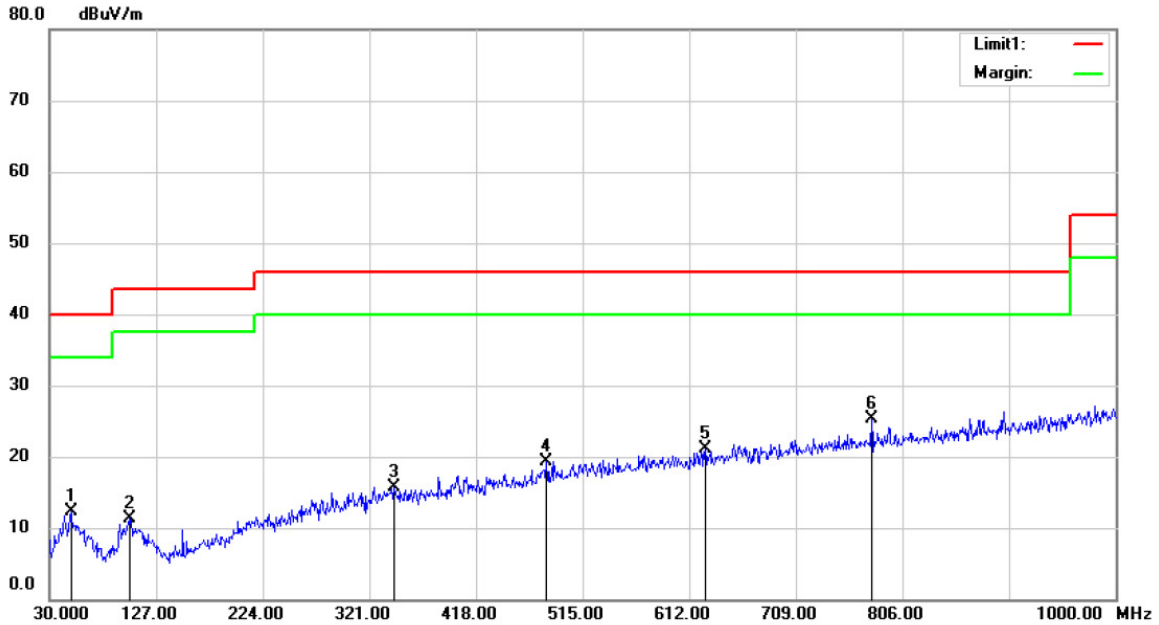

Site 3m Chamber #3 Polarization: ***Horizontal*** Temperature: 24 C

Limit: (RE)FCC PART 15 CLASS B Power: DC 3V Humidity: 53 %

Mode:TX 2412

Note:

No.	Mk.	Freq.	Reading Level	Correct Factor	Measure-ment	Limit	Over		Antenna Height	Table Degree	
		MHz	dBuV	dB	dBuV/m	dBuV/m	dB	Detector	cm	degree	Comment
1		49.4000	26.63	-14.27	12.36	40.00	-27.64	QP			
2		102.7500	26.53	-15.30	11.23	43.50	-32.27	QP			
3		343.3100	26.10	-10.35	15.75	46.00	-30.25	QP			
4		482.0200	27.03	-7.76	19.27	46.00	-26.73	QP			
5		626.5500	26.48	-5.42	21.06	46.00	-24.94	QP			
6	*	777.8700	28.53	-3.13	25.40	46.00	-20.60	QP			

*:Maximum data x:Over limit !:over margin Operator:

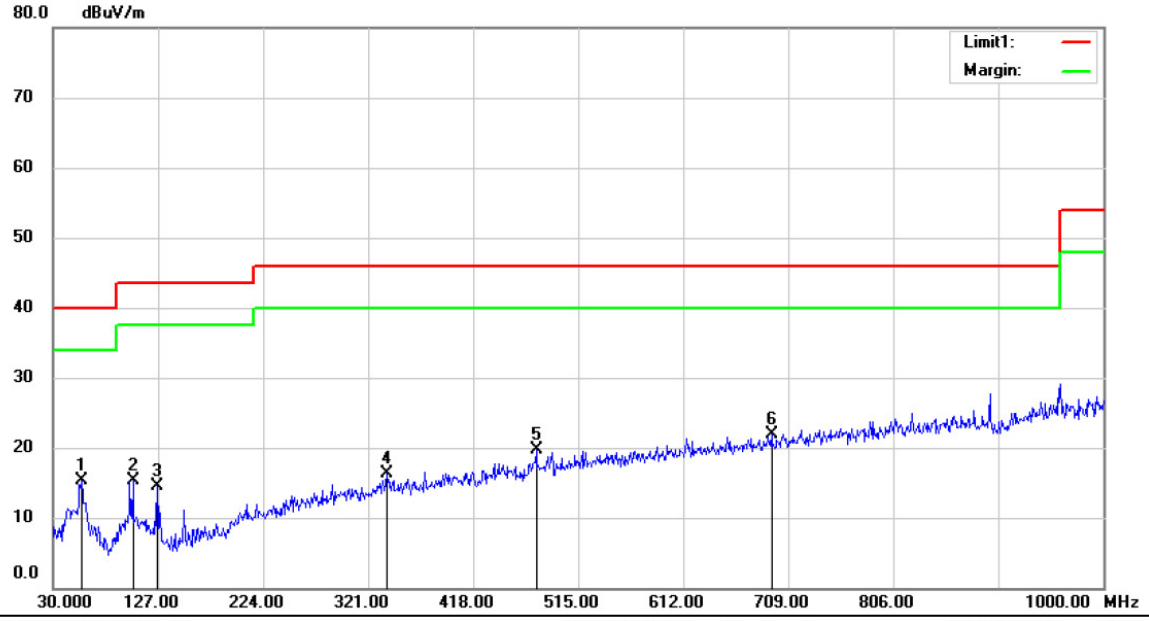

Site 3m Chamber #3 Polarization: ***Vertical*** Temperature: 24 C

Limit: (RE)FCC PART 15 CLASS B Power: DC 3V Humidity: 53 %

Mode:TX 2440

Note:

No.	Mk.	Freq.	Reading Level	Correct Factor	Measure-ment	Limit	Over		Antenna Height	Table Degree	
		MHz	dBuV	dB	dBuV/m	dBuV/m	dB	Detector	cm	degree	Comment
1		56.1900	30.54	-15.24	15.30	40.00	-24.70	QP			
2		103.7200	30.59	-15.30	15.29	43.50	-28.21	QP			
3		126.0300	32.32	-17.89	14.43	43.50	-29.07	QP			
4		338.4600	26.60	-10.37	16.23	46.00	-29.77	QP			
5		476.2000	27.61	-8.00	19.61	46.00	-26.39	QP			
6	*	693.4800	26.25	-4.35	21.90	46.00	-24.10	QP			

*:Maximum data x:Over limit !:over margin Operator:

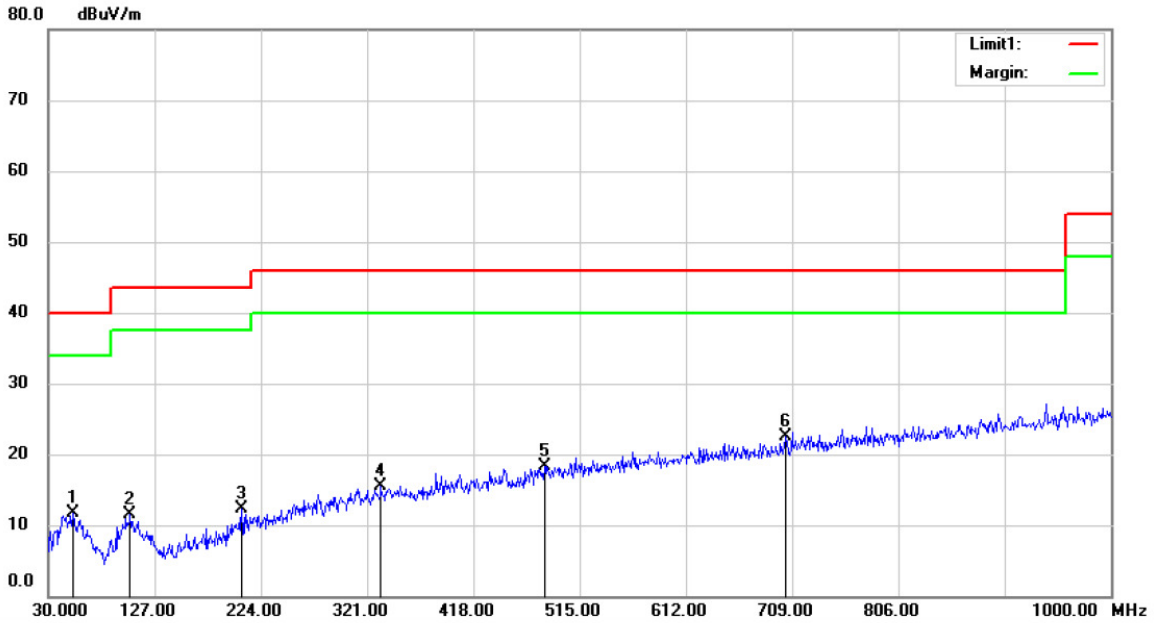

Site 3m Chamber #3 Polarization: ***Horizontal*** Temperature: 24 C

Limit: (RE)FCC PART 15 CLASS B Power: DC 3V Humidity: 53 %

Mode:TX 2440

Note:

No.	Mk.	Freq.	Reading Level	Correct Factor	Measure-ment	Limit	Over		Antenna Height	Table Degree	
		MHz	dBuV	dB	dBuV/m	dBuV/m	dB	Detector	cm	degree	Comment
1		52.3100	26.55	-14.78	11.77	40.00	-28.23	QP			
2		104.6900	26.77	-15.32	11.45	43.50	-32.05	QP			
3		206.5400	27.57	-15.20	12.37	43.50	-31.13	QP			
4		333.6100	26.10	-10.63	15.47	46.00	-30.53	QP			
5		482.9900	26.10	-7.74	18.36	46.00	-27.64	QP			
6	*	703.1800	26.62	-4.20	22.42	46.00	-23.58	QP			

*:Maximum data x:Over limit !:over margin Operator:

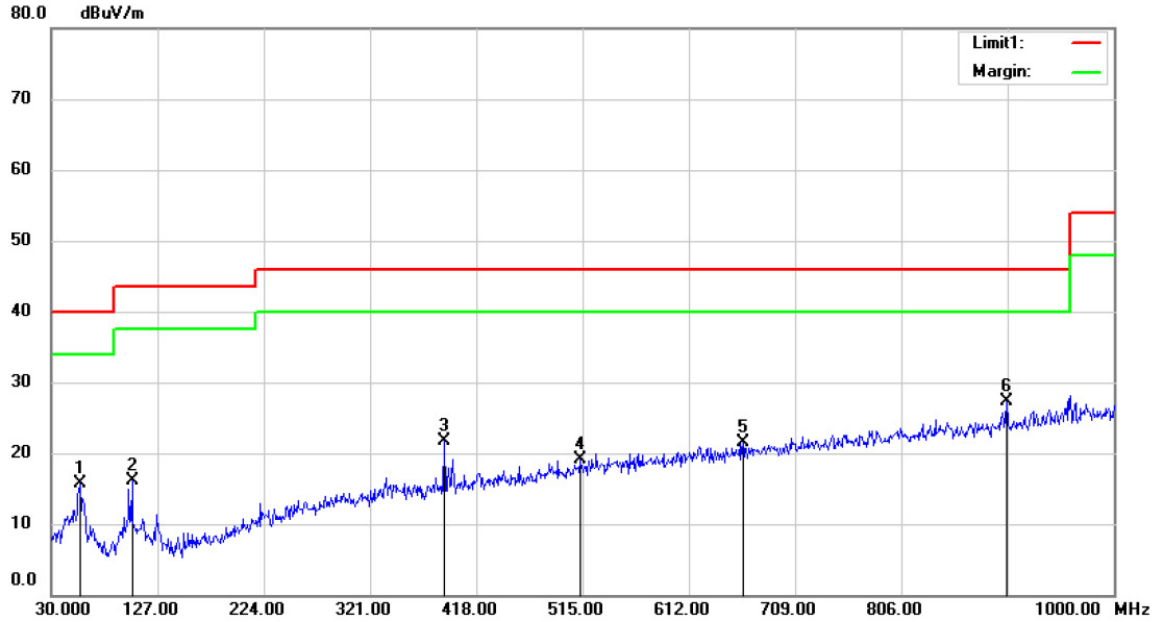

Site 3m Chamber #3 Polarization: *Vertical* Temperature: 24 C

Limit: (RE)FCC PART 15 CLASS B Power: DC 3V Humidity: 53 %

Mode:TX 2480

Note:

No.	Mk.	Freq.	Reading Level	Correct Factor	Measure-ment	Limit	Over		Antenna Height	Table Degree	
		MHz	dBuV	dB	dBuV/m	dBuV/m	dB	Detector	cm	degree	Comment
1		56.1900	30.87	-15.24	15.63	40.00	-24.37	QP			
2		103.7200	31.37	-15.30	16.07	43.50	-27.43	QP			
3		388.9000	31.48	-9.83	21.65	46.00	-24.35	QP			
4		513.0600	26.34	-7.26	19.08	46.00	-26.92	QP			
5		661.4700	26.29	-4.86	21.43	46.00	-24.57	QP			
6	*	902.0300	28.92	-1.53	27.39	46.00	-18.61	QP			

*:Maximum data x:Over limit !:over margin Operator:

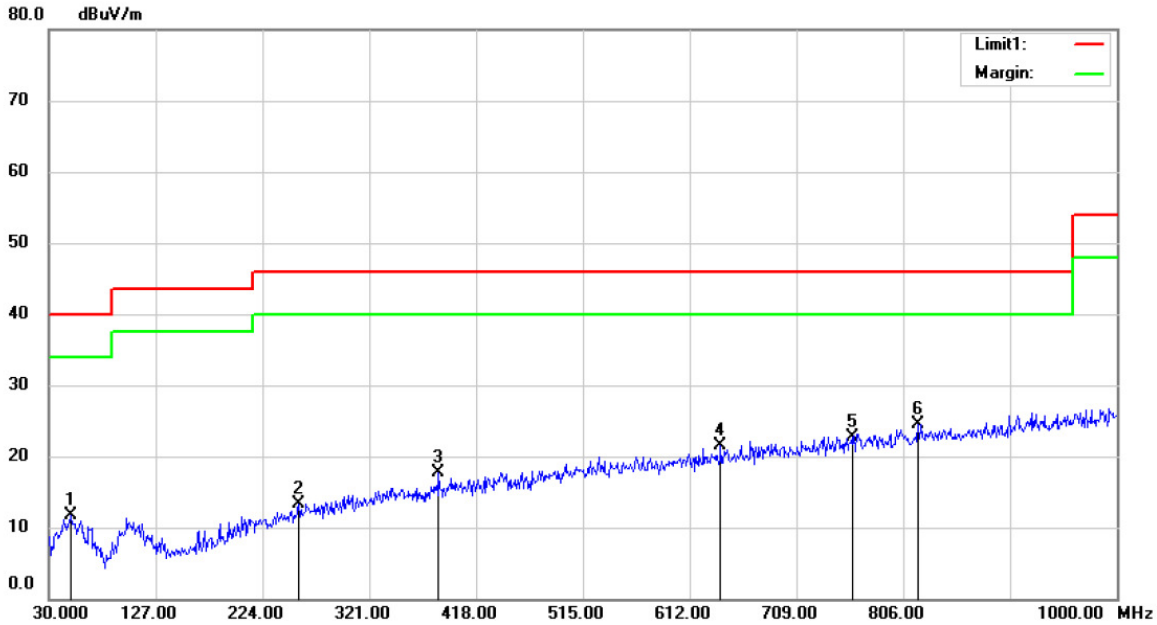

Site 3m Chamber #3 Polarization: ***Horizontal*** Temperature: 24 C

Limit: (RE)FCC PART 15 CLASS B Power: DC 3V Humidity: 53 %

Mode:TX 2480

Note:

No.	Mk.	Freq.	Reading Level	Correct Factor	Measure-ment	Limit	Over		Antenna Height	Table Degree	
		MHz	dBuV	dB	dBuV/m	dBuV/m	dB	Detector	cm	degree	Comment
1		50.3700	26.25	-14.55	11.70	40.00	-28.30	QP			
2		256.9800	26.48	-13.14	13.34	46.00	-32.66	QP			
3		384.0500	27.65	-10.02	17.63	46.00	-28.37	QP			
4		640.1300	26.77	-5.21	21.56	46.00	-24.44	QP			
5		759.4400	26.16	-3.39	22.77	46.00	-23.23	QP			
6	*	819.5800	27.15	-2.58	24.57	46.00	-21.43	QP			

*:Maximum data x:Over limit !:over margin Operator:

Transmitter Fundamental Field Strength

Operation Mode:	GFSK(Low,Mid,High)	Test Date :	January 20, 2016
FCC Part:	15.249(a)	Temperature :	24℃
Test Result:	PASS	Humidity :	55 %
Measured Distance:	3m	Test By:	SYP

Freq. (MHz)	Ant.Pol. H/V	Emission Level		Limit at 3m		Margin	
		PK (dBuV/m)	AV (dBuV/m)	PK (dBuV/m)	AV (dBuV/m)	PK (dB)	AV (dB)
2412	V	78.98	59.70	114	94	-35.02	-34.30
2412	H	76.19	57.30	114	94	-37.81	-36.70
2440	V	75.59	55.60	114	94	-38.41	-38.40
2440	H	80.46	62.30	114	94	-33.54	-31.70
2480	V	90.19	70.30	114	94	-23.81	-23.70
2480	H	78.22	58.60	114	94	-35.78	-35.40

Note: (1) All Readings are Peak Value.
(2) Emission Level= Reading Level+Probe Factor +Cable Loss
(3) All the x/y/z orientation has been investigated, and only worst case is presented in this report.

8.4 CONDUCTED EMISSIONS TEST

8.4.1 Applicable Standard

According to FCC Part 15.207(a)

8.4.2 Conformance Limit

Conducted Emission Limit		
Frequency(MHz)	Quasi-peak	Average
0.15-0.5	66-56	56-46
0.5-5.0	56	46
5.0-30.0	60	50
Note: 1. The lower limit shall apply at the transition frequencies 2. The limit decreases in line with the logarithm of the frequency in the range of 0.15 to 0.50MHz.		

8.4.3 Test Configuration

Test according to clause 7.3 conducted emission test setup

8.4.4 Test Procedure

The EUT was placed on a table which is 0.8m above ground plane.
Maximum procedure was performed on the highest emissions to ensure EUT compliance.
Repeat above procedures until all frequency measured were complete.

8.4.5 Test Results

N/A

8.5 ANTENNA APPLICATION

8.5.1 Antenna Requirement

Standard	Requirement
FCC CRF Part 15.203	An intentional radiator shall be designed to ensure that no antenna other than that furnished by the responsible party shall be used with the device. The use of a permanently attached antenna or of an antenna that uses a unique coupling to the intentional radiator shall be considered sufficient to comply with the provisions of this section. The manufacturer may design the unit so that a broken antenna can be replaced by the user, but the use of a standard antenna jack or electrical connector is prohibited. This requirement does not apply to carrier current devices or to devices operated under the provisions of §15.211, §15.213, §15.217, §15.219, or §15.221. Further, this requirement does not apply to intentional radiators that must be professionally installed, such as perimeter protection systems and some field disturbance sensors, or to other intentional radiators which, in accordance with §15.31(d), must be measured at the installation site. However, the installer shall be responsible for ensuring that the proper antenna is employed so that the limits in this part are not exceeded.

For intentional device, according to FCC 47 CFR Section 15.203, an intentional radiator shall be designed to ensure that no antenna other than that furnished by the responsible party shall be used with the device.

8.5.2 Result

PASS.

Note: ☒ Antenna use a permanently attached antenna which is not replaceable.
☐ Not using a standard antenna jack or electrical connector for antenna replacement
☐ The antenna has to be professionally installed (please provide method of installation)

which in accordance to section 15.203, please refer to the internal photos.