FCC 47 CFR PART 15 SUBPART C
ANSI C63.10: 2013
TEST REPORT
(Class II Permissive Change Report)

For

Wireless Siren

Model: HM1601

Data Applies To: N/A

Brand: Envisacor Technologies Inc.

Test Report Number:
T210705N01-RP1

Issued to

Envisacor Technologies Incorporated
726319 Sideroad 22B RR4 Meaford Canada N4L 1W7

Issued by

Compliance Certification Services Inc.
Tainan Lab.
No.8, Jiucengling, Xinhua Dist.,
Tainan City , Taiwan
Issued Date: July 29, 2021

Note: This report shall not be reproduced except in full, without the written approval of Compliance Certification Services Inc. This document may be altered or revised by Compliance Certification Services Inc. personnel only, and shall be noted in the revision section of the document.

Unless otherwise stated the results shown in this test report refer only to the sample(s) tested and such sample(s) are retained for 90 days only.
除非另有說明，此報告結果僅對測試之樣品負責，同時此樣品僅保留 90 天。本報告未經本公司書面許可，不可部份複製。
This document is issued by the Company subject to its General Conditions of Service printed overleaf, available on request or accessible at http://www.sgs.com.tw/Terms-and-Conditions and, for electronic format documents, subject to Terms and Conditions for Electronic Documents at http://www.sgs.com.tw/Terms-and-Conditions. Attention is drawn to the limitation of liability, indemnification and jurisdiction issues defined therein. Any holder of this document is advised that information contained hereon reflects the Company's findings at the time of its intervention only and within the limits of client's instruction, if any. The Company's sole responsibility is to its Client and this document does not exonerate parties to a transaction from exercising all their rights and obligations under the transaction documents. This document cannot be reproduced, except in full, without prior written approval of the Company. Any unauthorized alteration, forgery or falsification of the content or appearance of this document is unlawful and offenders may be prosecuted to the fullest extent of the law.

REVISION HISTORY

Rev.	Issue Date	Revisions	Effect Page	Revised By
00	July 23, 2021	See the following note rev.00	ALL	Gina Lin
01	July 29, 2021	See the following note rev.01	Page 5~7, 20~22, 24	Gina Lin

Note:

※ *Rev.00 Issue Date : July 23, 2021*
Revised Class II Permissive Change Report and the description is shown in page 7. (3.2 DESCRIPTION OF CLASS II CHANGE)

※ *Rev.01 Issue Date: July 29, 2021*
Revised typo and add test result summary.

This document cannot be reproduced except in full, without prior written approval of the Company. 本報告未經本公司書面許可，不可部份複製。

TABLE OF CONTENTS

1. TEST RESULT CERTIFICATION 4
2. TEST RESULT SUMMARY 5
3. EUT DESCRIPTION 6
3.1 DESCRIPTION OF EUT & POWER 6
3.2 DESCRIPTION OF CLASS II CHANGE 7
4. TEST METHODOLOGY 8
4.1 EUT CONFIGURATION 8
4.2 EUT EXERCISE 8
4.3 GENERAL TEST PROCEDURES 8
4.4 FCC PART 15.205 RESTRICTED BANDS OF OPERATIONS 9
4.5 DESCRIPTION OF TEST MODES 9
5. INSTRUMENT CALIBRATION 10
5.1 MEASURING INSTRUMENT CALIBRATION 10
5.2 MEASUREMENT EQUIPMENT USED 10
5.3 MEASUREMENT UNCERTAINTY 11
6. FACILITIES AND ACCREDITATIONS 12
6.1 FACILITIES 12
6.2 EQUIPMENT 12
6.3 TABLE OF ACCREDITATIONS AND LISTINGS 12
6.4 TABLE OF ACCREDITATIONS AND LISTINGS 13
7. SETUP OF EQUIPMENT UNDER TEST 14
7.1 SETUP CONFIGURATION OF EUT 14
7.2 SUPPORT EQUIPMENT 14
7.3 EUT OPERATING CONDITION 14
8. APPLICABLE LIMITS AND TEST RESULTS 15
8.1 RADIATED EMISSIONS 15
9. APPENDIX 1 PHOTOGRAPHS OF TEST SETUP 26

This document cannot be reproduced except in full, without prior written approval of the Company. 本報告未經本公司書面許可，不可部份複製。

1. TEST RESULT CERTIFICATION

Product:	Wireless Siren
Model:	HM1601
Data Applies To:	N/A
Brand Name:	Envisacor Technologies Inc.
Applicant:	**Envisacor Technologies Incorporated** 726319 Sideroad 22B RR4 Meaford Canada N4L 1W7
Manufacturer:	**Vision Automobile Electronics Industrial Co Ltd.** No.78, Gongye 3rd Rd., Technology Industrial Park, Tainan , Taiwan , 70955
Tested:	July 14, 2021

APPLICABLE STANDARDS	
STANDARD	**TEST RESULT**
FCC 47 CFR Part 15 Subpart C ANSI C63.10: 2013	No non-compliance noted

Statements of Conformity
Determining compliance shall be based on the results of the compliance measurement, not taking into account measurement instrumentation uncertainty.

We hereby certify that:

The above equipment was tested by Compliance Certification Services Inc. The test data, data evaluation, test procedures, and equipment configurations shown in this report were made in accordance with the procedures given in ANSI C63.10: 2013 and the energy emitted by the sample EUT tested as described in this report is in compliance with conducted and radiated emission limits of FCC Rules Part 15.207, 15.209 and Part 15.231.
The test results of this report relate only to the tested sample identified in this report.

Approved by:

Eric Huang
Section Manager

This document cannot be reproduced except in full, without prior written approval of the Company. 本報告未經本公司書面許可，不可部份複製。

2. TEST RESULT SUMMARY

FCC Standard Section	Report Section	Test Item	Result
15.203	3	Antenna Requirement	-
-	8.1	Occupied Bandwidth (99%)	-
15.231(c)	8.2	20dB Bandwidth	-
15.231(a)(1)	8.3	Limit of Transmission Time	-
-	8.4	Duty Cycle	-
15.231(b)	8.5	Radiated Emissions	Pass
15.207(a)	8.6	Powerline Conducted Emissions	-

This document cannot be reproduced except in full, without prior written approval of the Company. 本報告未經本公司書面許可，不可部份複製。

3. EUT DESCRIPTION

3.1 DESCRIPTION OF EUT & POWER

Product.	Wireless Siren
Model Number	HM1601
Brand Name	Envisacor Technologies Inc.
Received Date	July 06, 2021
Reported Date	July 20, 2021
Operation Frequency	433.92 MHz
Transmit Peak Power	87.259 dBμV/m
Average Power	76.047 dBμV/m
Number of Channels	1 Channel
Type of Modulation	ASK
Power Supply	Powered from battery (Battery: 4pcs x AA Energizer Batteries)
Antenna Type	Type: Wire Antenna Model: HM1601 Manufacturer: N/A Gain: -21dBi
RF Module Brand /Model	MCU CHIP (U4) PTC / PT4302-X RF Module (U4) Maximum / MAX7044
Hardware Version	V1.0
Software Version	V1.0
Temperature Range	-15°C ~ +60°C

Remark:

1. Client consigns only one model sample to test (Model Number: **HM1601**). Therefore, the testing Lab. just guarantees the unit, which has been tested.
2. *This submittal(s) (test report) is intended for FCC ID: **2AG7TENVV00015** filing to comply with Section 15.207, 15.209 and 15.231 of the FCC Part 15, Subpart C Rules.*

This document cannot be reproduced except in full, without prior written approval of the Company. 本報告未經本公司書面許可，不可部份複製。

3.2 DESCRIPTION OF CLASS II CHANGE

The major change filed under this application is:

Updated the RAD (Above&Below 1GHz) test data.
Due to the component stop production, PCB layout partial modify. All components are no change except the package from DIP type change to SMD type and the spec. is same as before.

Since the above changes do not influence the RF characteristics, after evaluated, the testing items of the data could be used and showed as original application document reports (report number: T201116N02-RP1).

This document cannot be reproduced except in full, without prior written approval of the Company. 本報告未經本公司書面許可，不可部份複製。

4. TEST METHODOLOGY

The tests documented in this report were performed in accordance with ANSI C63.10 (2013) and FCC CFR 47 2.1046, 2.1047, 2.1049, 2.1051, 2.1053, 2.1055, 2.1057, 15.207, 15.209 and 15.231

4.1 EUT CONFIGURATION

The EUT configuration for testing is installed on RF field strength measurement to meet the Commissions requirement and operating in a manner that intends to maximize its emission characteristics in a continuous normal application.

4.2 EUT EXERCISE

The EUT was operated in the engineering mode to fix the TX frequency that was for the purpose of the measurements.

4.3 GENERAL TEST PROCEDURES

Conducted Emissions

The EUT is placed on the turntable, which is 0.8 m above ground plane. According to the requirements in Section 13.1.4.1 of ANSI C63.10. Conducted emissions from the EUT measured in the frequency range between 0.15 MHz and 30MHz using CISPR Quasi-peak and average detector modes.

Radiated Emissions

The EUT is placed on a turn table, which is 1.5m high is for radiated emission above 1GHz and 0.8m for below 1GHz. The turntable shall rotate 360 degrees to determine the position of maximum emission level. EUT is set 3m away from the receiving antenna, which varied from 1m to 4m to find out the highest emission. And also, each emission was to be maximized by changing the polarization of receiving antenna both horizontal and vertical. In order to find out the maximum emissions, exploratory radiated emission measurements were made according to the requirements in Section 13.1.4.1 of ANSI C63.10.

This document cannot be reproduced except in full, without prior written approval of the Company. 本報告未經本公司書面許可，不可部份複製。

4.4 FCC PART 15.205 RESTRICTED BANDS OF OPERATIONS

(a) Except as shown in paragraph (d) of this section, only spurious emissions are permitted in any of the frequency bands listed below:

MHz	MHz	MHz	GHz
0.090 - 0.110	16.42 - 16.423	399.9 - 410	4.5 - 5.15
[1]0.495 - 0.505	16.69475 - 16.69525	608 - 614	5.35 - 5.46
2.1735 - 2.1905	16.80425 - 16.80475	960 - 1240	7.25 - 7.75
4.125 - 4.128	25.5 - 25.67	1300 - 1427	8.025 - 8.5
4.17725 - 4.17775	37.5 - 38.25	1435 - 1626.5	9.0 - 9.2
4.20725 - 4.20775	73 - 74.6	1645.5 - 1646.5	9.3 - 9.5
6.215 - 6.218	74.8 - 75.2	1660 - 1710	10.6 - 12.7
6.26775 - 6.26825	108 - 121.94	1718.8 - 1722.2	13.25 - 13.4
6.31175 - 6.31225	123 - 138	2200 - 2300	14.47 - 14.5
8.291 - 8.294	149.9 - 150.05	2310 - 2390-	15.35 - 16.2
8.362 - 8.366	156.52475 - 156.52525	2483.5 - 2500	17.7 - 21.4
8.37625 - 8.38675	156.7 - 156.9	2655 - 2900	22.01 - 23.12
8.41425 - 8.41475	162.0125 - 167.17	3260 - 3267	23.6 - 24.0
12.29 - 12.293	167.72 - 173.2	3332 - 3339	31.2 - 31.8
12.51975 - 12.52025	240 - 285	3345.8 - 3358	36.43 - 36.5
12.57675 - 12.57725	322 - 335.4	3600 - 4400	([2])
13.36 - 13.41			

[1] Until February 1, 1999, this restricted band shall be 0.490-0.510 MHz.

[2] Above 38.6

(b) Except as provided in paragraphs (d) and (e), the field strength of emissions appearing within these frequency bands shall not exceed the limits shown in Section 15.209. At frequencies equal to or less than 1000 MHz, compliance with the limits in Section 15.209 shall be demonstrated using measurement instrumentation employing a CISPR quasi-peak detector. Above 1000 MHz, compliance with the emission limits in Section 15.209 shall be demonstrated based on the average value of the measured emissions. The provisions in Section 15.35 apply to these measurements.

4.5 DESCRIPTION OF TEST MODES

The EUT (Model: **HM1601**) had been tested under engineering test mode condition and the EUT staying in continuous transmitting mode.

Note：

1) The field strength of spurious emission was measured in the following position: EUT stand-up position (Y axis), lie-down position (X, Z axis). The worst emission was found in lie-down position (X axis) and the worst case was recorded.

This document cannot be reproduced except in full, without prior written approval of the Company. 本報告未經本公司書面許可，不可部份複製。

5. INSTRUMENT CALIBRATION

5.1 MEASURING INSTRUMENT CALIBRATION

The measuring equipment, which was utilized in performing the tests documented herein, has been calibrated in accordance with the manufacturer's recommendations for utilizing calibration equipment, which is traceable to recognized national standards.

5.2 MEASUREMENT EQUIPMENT USED

Chamber 966 Room (Radiation Test)					
Name of Equipment	**Manufacturer**	**Model**	**Serial Number**	**Calibration Date**	**Calibration Due**
Active Loop Antenna	ETS-LINDREN	6502	8905-2356	08/02/2019	08/01/2021
Bilog Antenna With 6dB Attenator	SUNOL SCIENCES & EMCI	JB1 & AT-N0681	A070506-1 & AT-N0681	09/14/2020	09/13/2021
Cable	Suhner	SUCOFLEX104 PEA	20520/4PEA&O 6	01/29/2021	01/28/2022
Double Ridged Guide Horn Antenna	ETS-LINDGRE N	3116	00078900	03/30/2021	03/29/2022
EMI Test Receiver	R&S	ESCI	100960	02/05/2021	02/04/2022
EXA Spectrum Analyzer	KEYSIGHT	N9010A	MY54430216	07/20/2020	07/19/2021
Horn Antenna	Com-Power	AH-118	071032	05/04/2021	05/03/2022
Pre-Amplifier	EMCI	EMC012645	980098	01/29/2021	01/28/2022
Pre-Amplifier	HP	8447F	2443A01683	01/19/2021	01/18/2022
Pre-Amplifier	Com-Power	PAM-840A	461378	07/20/2020	07/19/2021
Type N coaxial cable	Suhner	CHA9513	6	01/19/2021	01/18/2022
Notch Filter	MICRO-TRONI CS	BRM50702-01	018	N.C.R	N.C.R
Software	Excel(ccs-o6-2020 v1.1) e3(6.101222)				

Remark: *Each piece of equipment is scheduled for calibration once a year.*

This document cannot be reproduced except in full, without prior written approval of the Company. 本報告未經本公司書面許可，不可部份複製。

5.3 MEASUREMENT UNCERTAINTY

PARAMETER	UNCERTAINTY
Radiated Emission, 30 to 200 MHz Test Site : OATS-6	±3.3456dB
Radiated Emission, 200 to 1000 MHz Test Site : OATS-6	±2.6828dB
Radiated Emission, 1 to 8 GHz	± 2.6485dB
Radiated Emission, 8 to 18 GHz	± 2.6852dB
Radiated Emission, 18 to 26.5 GHz	± 2.6485dB
Radiated Emission, 26 to 40 GHz	± 3.0295dB
Power Line Conducted Emission	±1.91dB
Band Width	136.49kHz
Peak Output Power MU	±1.904dB
Band Edge MU	±0.302dBuV
Channel Separation MU	361.69Hz
Duty Cycle MU	0.064ms
Frequency Stability MU	0.223kHz

Uncertainty figures are valid to a confidence level of 95%, k=2

This document cannot be reproduced except in full, without prior written approval of the Company. 本報告未經本公司書面許可，不可部份複製。

6. FACILITIES AND ACCREDITATIONS

6.1 FACILITIES

All measurement facilities used to collect the measurement data are located at

☒ No.8, Jiucengling, Xinhua Dist., Tainan City 712, Taiwan (R.O.C.)

The sites are constructed in conformance with the requirements of ANSI C63.7:1992, ANSI C63.10: 2013 and CISPR Publication 22.

6.2 EQUIPMENT

Radiated emissions are measured with one or more of the following types of linearly polarized antennas: tuned dipole, biconical, log periodic, bi-log, and/or ridged waveguide, horn. Spectrum analyzers with pre-selectors and quasi-peak detectors are used to perform radiated measurements.

Conducted emissions are measured with Line Impedance Stabilization Networks and EMI Test Receivers.

Calibrated wideband preamplifiers, coaxial cables, and coaxial attenuators are also used for making measurements.

All receiving equipment conforms to CISPR Publication 16-1, “Radio Interference Measuring Apparatus and Measurement Methods.”

6.3 TABLE OF ACCREDITATIONS AND LISTINGS

The test facilities used to perform radiated and conducted emissions tests are accredited by Taiwan Accreditation Foundation for the specific scope of accreditation under Lab Code: 1109 to perform Electromagnetic Interference tests according to FCC PART 15 AND CISPR 22 requirements. No part of this report may be used to claim or imply product endorsement by TAF or any agency of the Government. In addition, the test facilities are listed with Federal Communications Commission (registration no: TW1109).

This document cannot be reproduced except in full, without prior written approval of the Company. 本報告未經本公司書面許可，不可部份複製。

6.4 TABLE OF ACCREDITATIONS AND LISTINGS

Our laboratories are accredited and approved by the following accreditation body according to ISO/IEC 17025.

Taiwan	TAF

The measuring facility of laboratories has been authorized or registered by the following approval agencies.

Canada	Industry Canada
Germany	TUV NORD
Taiwan	BSMI
USA	FCC
Japan	VCCI

Copies of granted accreditation certificates are available for downloading from our web site, http://www.ccsrf.com

This document cannot be reproduced except in full, without prior written approval of the Company. 本報告未經本公司書面許可，不可部份複製。

7. SETUP OF EQUIPMENT UNDER TEST

7.1 SETUP CONFIGURATION OF EUT

See test photographs attached in Appendix I for the actual connections between EUT and support equipment.

7.2 SUPPORT EQUIPMENT

【RF】

No.	Product	Manufacturer	Model No.	Certify No.	Signal cable
1	N/A	---	---	---	---

No.	Signal cable description	
A	N/A	---

【EMC】

No.	Product	Manufacturer	Model No.	Certify No.	Signal cable
1	N/A	---	---	---	---

No.	Signal cable description	
A	N/A	---

Remark:

1. All the equipment/cables were placed in the worst-case configuration to maximize the emission during the test.
2. Grounding was established in accordance with the manufacturer's requirements and conditions for the intended use.
3. shd. = shielded; unshd. = unshielded

7.3 EUT OPERATING CONDITION

RF Setup

1. Set up a whole system as the setup diagram.
2. Turn on power.

This document cannot be reproduced except in full, without prior written approval of the Company. 本報告未經本公司書面許可，不可部份複製。

8. APPLICABLE LIMITS AND TEST RESULTS

8.1 RADIATED EMISSIONS

LIMIT

1. Except as provided elsewhere in this Subpart, the emissions from an intentional radiator shall not exceed the field strength levels specified in the following table:

Frequency (MHz)	Field Strength (mV/m)	Field Strength (dBμV/m at 3-meter)	Measurement Distance (m)
30-88	100*	40	3
88-216	150*	43.5	3
216-960	200*	46	3
Above 960	500	54	3

Remark: Except as provided in paragraph (g), fundamental emissions from intentional radiators operating under this Section shall not be located in the frequency bands 54-72 MHz, 76-88 MHz, 174-216 MHz or 470-806 MHz. However, operation within these frequency bands is permitted under other sections of this Part, e.g., Sections 15.231 and 15.241.

2. For intentional device, according to § 15.231, the general requirement of field strength of radiated emissions from intentional radiators at a distance of 3 meters shall not exceed the following table.

Fundamental Frequency (MHz)	Field Strength of Fundamental (μV/M)	Field Strength of Spurious Emission (μV/M)
40.66-40.70	2250	225
70-130	1250	125
130-174	1250 to 3750**	125 to 375**
174-260	3750	375
260-470	3750 to 12500**	375 to 1250**
Above 470	12500	1250

Note :

1. " ※※ " linear interpolations.
2. Where F is the frequency in MHz, the formulas for calculating the maximum permitted fundamental field strengths are as follows: for the band 130-174 MHz, uV/m at 3 meters = 56.81818(F) - 6136.3636; for the band 260-470 MHz, uV/m at 3 meters = 41.6667(F) - 7083.3333. The maximum permitted unwantedemission level is 20dB below the maximum permitted fundamental level.

This document cannot be reproduced except in full, without prior written approval of the Company. 本報告未經本公司書面許可，不可部份複製。

TEST CONFIGURATION

9kHz ~ 30MHz

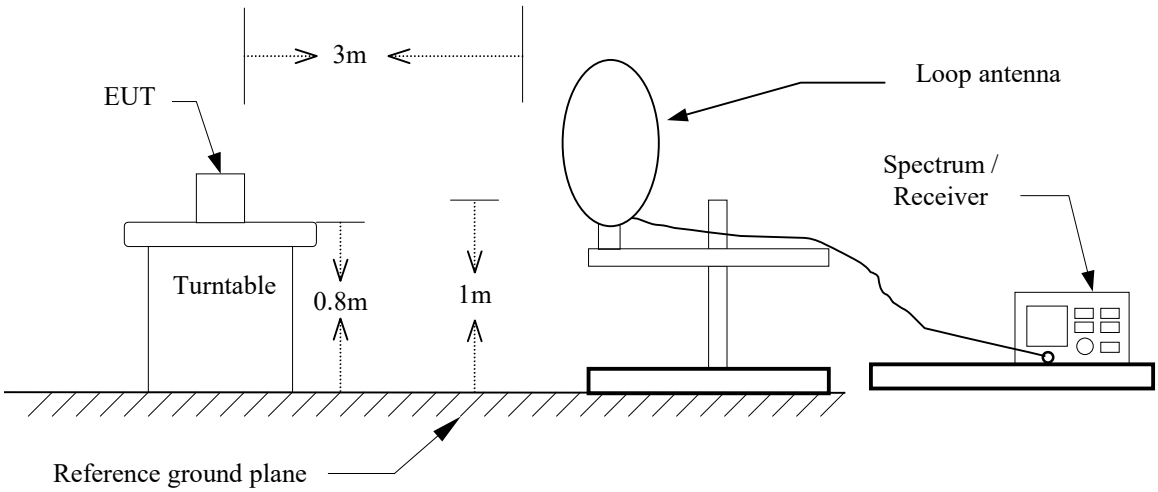

Below 1 GHz

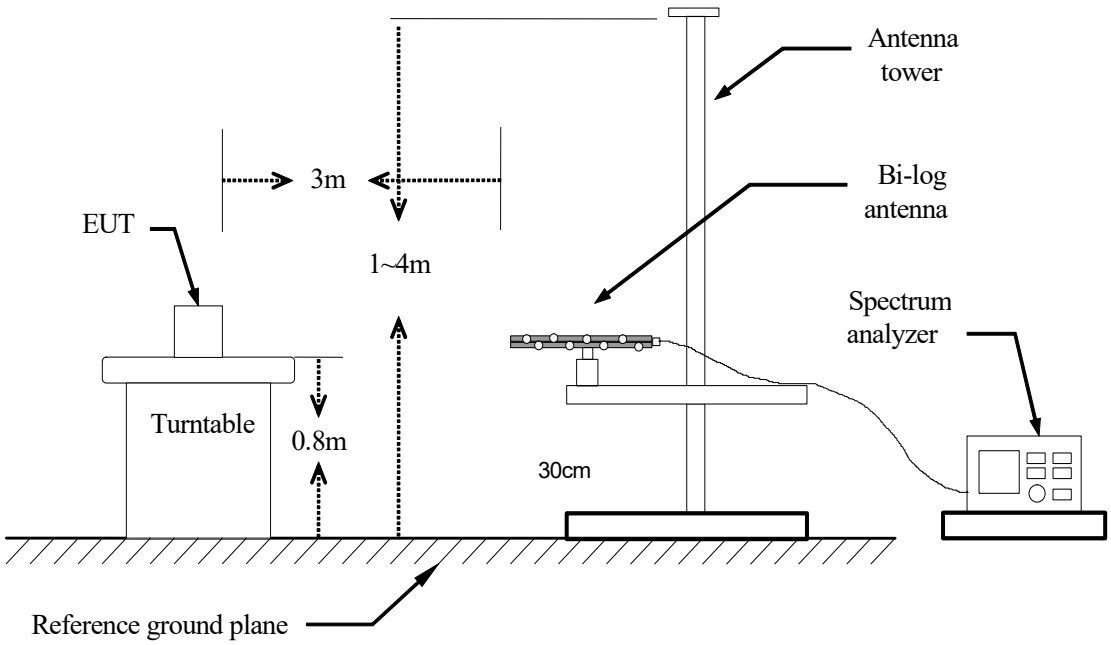

This document cannot be reproduced except in full, without prior written approval of the Company. 本報告未經本公司書面許可，不可部份複製。

Above 1 GHz

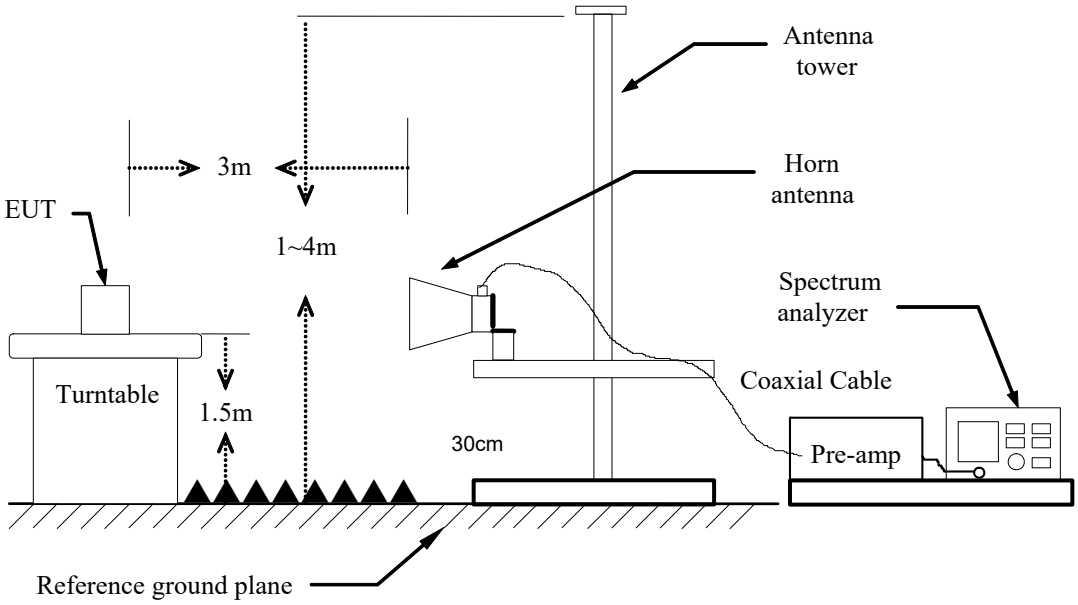

TEST PROCEDURE

1. The EUT is placed on a turntable, which is 0.8m/1.5m above ground plane.
2. The turntable shall be rotated for 360 degrees to determine the position of maximum emission level.
3. EUT is set 3m away from the receiving antenna, which is varied from 1m to 4m to find out the highest emissions.
4. Maximum procedure was performed on the six highest emissions to ensure EUT compliance.
5. And also, each emission was to be maximized by changing the polarization of receiving antenna both horizontal and vertical.
6. Set the spectrum analyzer in the following setting as:
   Below 1GHz:
   RBW=100kHz / VBW=300kHz / Sweep=AUTO
   Above 1GHz:
   (a) PEAK: RBW=VBW=1MHz / Sweep=AUTO
   (b) AVERAGE: Peak Level + Duty Factor
7. Repeat above procedures until the measurements for all frequencies are complete.
8. No emission is found between lowest internal used/generated frequency to 30MHz (9kHz~30MHz)
9. Average level=Peak level + Duty factor
10. In order to comply the KDB 41477 requirement, although the test data is done in chamber, there has made the comparison with open site test area, and confirming the data is valid.

This document cannot be reproduced except in full, without prior written approval of the Company. 本報告未經本公司書面許可，不可部份複製。

Report No.: T210705N01-RP1 Ref. No.: T201116N02-RP1

TEST RESULTS

Below 1GHz

Operation Mode: TX **Test Date:** 2021/07/14

Temperature: 26.8℃ **Tested by:** Ted Huang

Humidity: 55% RH **Polarity:** Ver. / Hor.

Vertical

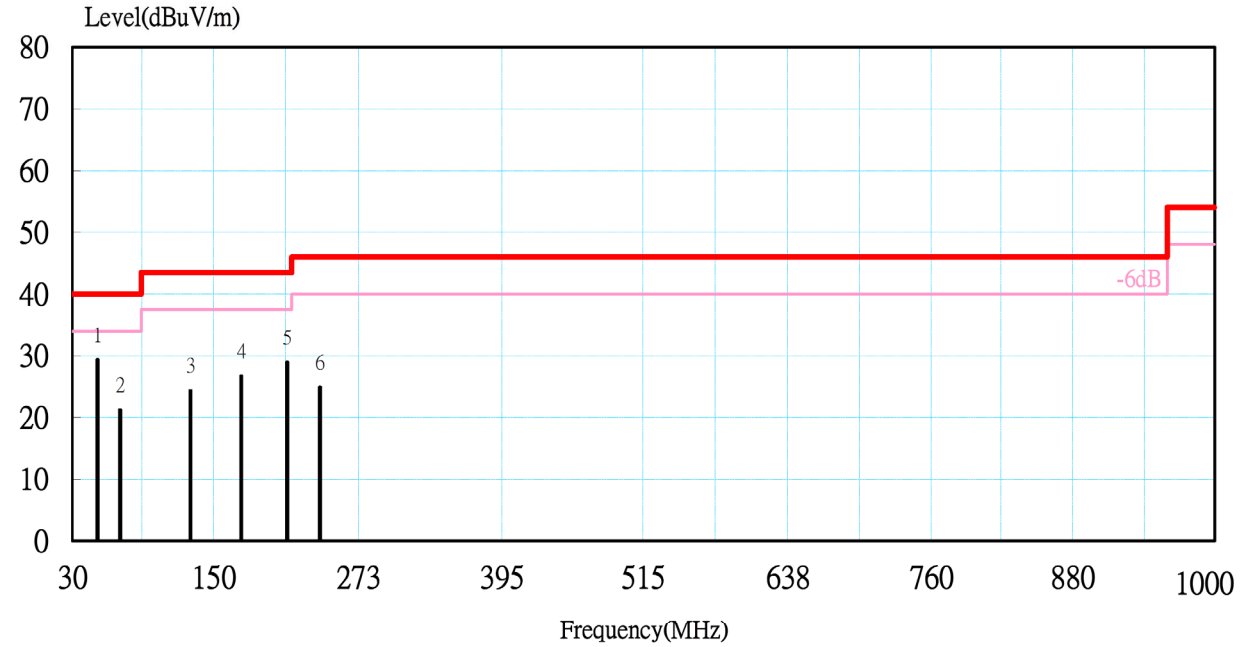

No.	Freq-Uency (MHz)	Meter Reading at 3 m Level (dBµV)	Antenna Factor (dB/m)	Cable Loss (dB)	Emission at 3 m Level (dBµV/m)	Limits (dBµV/m)	Margin (dB)	Detector Mode PK/QP
1	51.45	14.25	14.03	1.05	29.33	40.00	**-10.67**	QP
2	70.95	6.14	13.97	1.15	21.26	40.00	**-18.74**	QP
3	130.26	3.08	19.77	1.50	24.36	43.50	**-19.14**	QP
4	173.70	7.18	17.64	1.89	26.71	43.50	**-16.79**	QP
5	212.47	8.32	18.50	2.09	28.91	43.50	**-14.59**	QP
6	240.56	4.92	17.60	2.36	24.88	46.00	**-21.12**	QP

Remark:

1. No emission found between lowest internal used/generated frequency to 30MHz (9kHz~30MHz).
2. Radiated emissions measured in frequency range from 30 MHz to 1000MHz were made with an instrument using peak/quasi-peak detector mode.
3. Quasi-peak test would be performed if the peak result were greater than the quasi-peak limit or as required by the applicant.
4. Measurements above show only up to 6 maximum emissions noted, or would be lesser, with " N/A " remark, if no specific emissions from the EUT are recorded (ie: margin>20dB from the applicable limit) and considered that's already beyond the background noise floor.
5. Emission at 3m Level=Meter Reading +Antenna Factor +Cable Loss
   Margin= Emission at 3m Level -Limits
6. That the limit for signals below 1GHz is a QP limit and peak readings are below the QP limit.
7. The fundamental signal is not shown in the test data because measurements at fundamental frequency are shown separately and were ignored during the 30 – 1000 MHz scan.

This document cannot be reproduced except in full, without prior written approval of the Company. 本報告未經本公司書面許可，不可部份複製。

Report No.: T210705N01-RP1 Ref. No.: T201116N02-RP1

Operation Mode: TX **Test Date:** 2021/07/14

Temperature: 26.8℃ **Tested by:** Ted Huang

Humidity: 55% RH **Polarity:** Ver. / Hor.

Horizontal

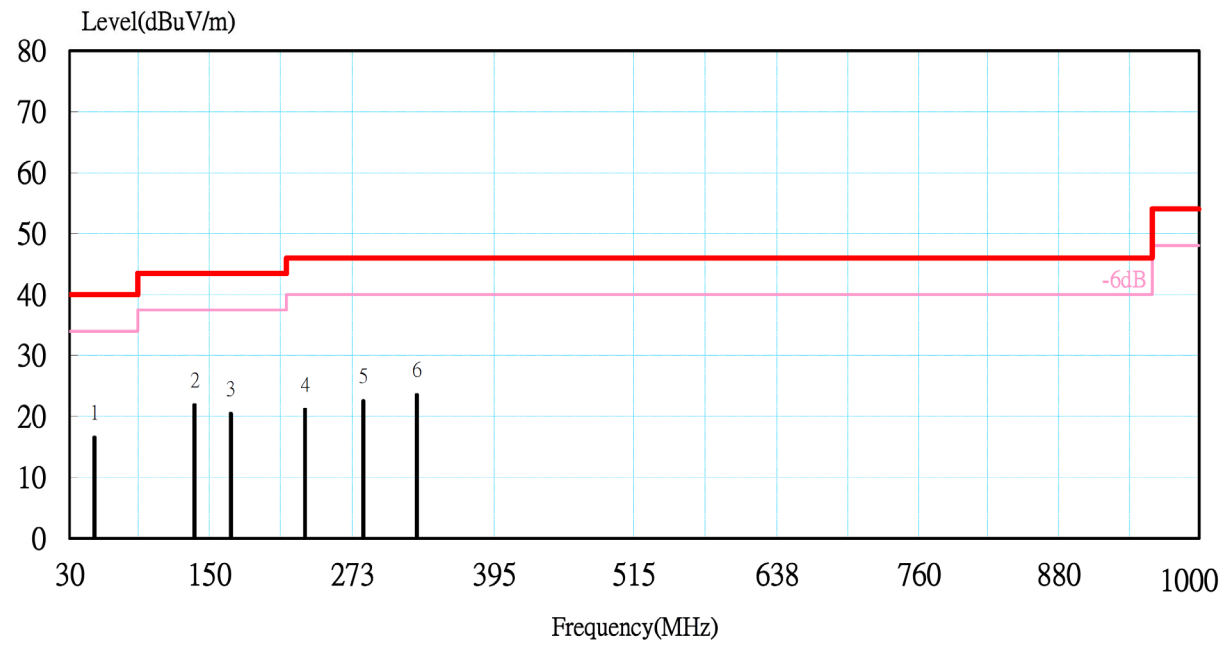

No.	Freq-Uency (MHz)	Meter Reading at 3 m Level (dBµV)	Antenna Factor (dB/m)	Cable Loss (dB)	Emission at 3 m Level (dBµV/m)	Limits (dBµV/m)	Margin (dB)	Detector Mode PK/QP
1	51.23	1.52	14.04	1.05	16.61	40.00	**-23.39**	QP
2	137.81	1.35	19.02	1.58	21.95	43.50	**-21.55**	QP
3	168.54	0.66	17.97	1.86	20.49	43.50	**-23.01**	QP
4	232.80	1.08	17.85	2.28	21.22	46.00	**-24.78**	QP
5	282.20	1.42	18.52	2.66	22.60	46.00	**-23.40**	QP
6	328.20	0.86	19.85	2.89	23.60	46.00	**-22.40**	QP

Remark:

1. No emission found between lowest internal used/generated frequency to 30MHz (9kHz~30MHz).
2. Radiated emissions measured in frequency range from 30 MHz to 1000MHz were made with an instrument using peak/quasi-peak detector mode.
3. Quasi-peak test would be performed if the peak result were greater than the quasi-peak limit or as required by the applicant.
4. Measurements above show only up to 6 maximum emissions noted, or would be lesser, with " N/A " remark, if no specific emissions from the EUT are recorded (ie: margin>20dB from the applicable limit) and considered that's already beyond the background noise floor.
5. Emission at 3m Level=Meter Reading +Antenna Factor +Cable Loss
   Margin= Emission at 3m Level -Limits
6. That the limit for signals below 1GHz is a QP limit and peak readings are below the QP limit.
7. The fundamental signal is not shown in the test data because measurements at fundamental frequency are shown separately and were ignored during the 30 – 1000 MHz scan.

This document cannot be reproduced except in full, without prior written approval of the Company. 本報告未經本公司書面許可，不可部份複製。

Report No.: T210705N01-RP1 Ref. No.: T201116N02-RP1

The fundamental signal

Operation Mode:	TX	**Test Date:**	2021/07/14
Temperature:	26.2℃	**Tested by:**	Ted Huang
Humidity:	55% RH	**Polarity:**	Ver. / Hor.

Horizontal

Freq.	Reading	AF	Cable Loss	Pre-amp	Filter	Level	Limit	Margin	Mark
(MHz)	(dBμV)	(dB/m)	(dB)	(dB)	(dB)	(dBμV/m)	(dBμV/m)	(dB)	(P/Q/A)
433.920	87.347	22.246	3.461	25.996	0.000	87.058	100.825	-13.767	P
433.920	-	-	-	-	-	75.846	80.825	-4.979	A

Vertical

Freq.	Reading	AF	Cable Loss	Pre-amp	Filter	Level	Limit	Margin	Mark
(MHz)	(dBμV)	(dB/m)	(dB)	(dB)	(dB)	(dBμV/m)	(dBμV/m)	(dB)	(P/Q/A)
433.920	87.548	22.246	3.461	25.996	0.000	87.259	100.825	-13.566	P
433.920	-	-	-	-	-	76.047	80.825	-4.778	A

Remark:

1.Level=Reading +AF +Cable Loss -Pre-amp +Filter
2.Margin=Level -Limit
3.Average level=Peak level +Duty factor
4.The Value of Duty factor reference to original test report(T201116N02-RP1).

This document cannot be reproduced except in full, without prior written approval of the Company. 本報告未經本公司書面許可，不可部份複製。

Report No.: T210705N01-RP1 Ref. No.: T201116N02-RP1

The Harmonic

Operation Mode:	TX	**Test Date:**	2021/07/14
Temperature:	26.2℃	**Tested by:**	Ted Huang
Humidity:	55% RH	**Polarity:**	Ver. / Hor.

Horizontal

Freq.	Reading	AF	Cable Loss	Pre-amp	Filter	Level	Limit	Margin	Mark
(MHz)	(dBμV)	(dB/m)	(dB)	(dB)	(dB)	(dBμV/m)	(dBμV/m)	(dB)	(P/Q/A)
867.85	48.53	28.73	5.44	25.12	0.00	57.58	80.83	-23.24	P
867.85	-	-	-	-	-	46.37	60.83	-14.46	A

Vertical

Freq.	Reading	AF	Cable Loss	Pre-amp	Filter	Level	Limit	Margin	Mark
(MHz)	(dBμV)	(dB/m)	(dB)	(dB)	(dB)	(dBμV/m)	(dBμV/m)	(dB)	(P/Q/A)
867.84	45.74	28.73	5.44	25.12	0.00	54.79	80.83	-26.03	P
867.84	-	-	-	-	-	43.58	60.83	-17.24	A

Remark:

1.Level=Reading +AF +Cable Loss -Pre-amp +Filter
2.Margin=Level -Limit
3.Average level=Peak level +Duty factor
4.The Value of Duty factor reference to original test report(T201116N02-RP1).

This document cannot be reproduced except in full, without prior written approval of the Company. 本報告未經本公司書面許可，不可部份複製。

Report No.: T210705N01-RP1 Ref. No.: T201116N02-RP1

Above 1 GHz

Operation Mode:	TX	**Test Date:**	2021/07/14
Temperature:	26.2℃	**Tested by:**	Ted Huang
Humidity:	55% RH	**Polarity:**	Ver. / Hor.

Horizontal

	Freq.	Reading	AF	Cable Loss	Pre-amp	Filter	Level	Limit	Margin	Mark
	(MHz)	(dBμV)	(dB/m)	(dB)	(dB)	(dB)	(dBμV/m)	(dBμV/m)	(dB)	(P/Q/A)
*	1301.63	68.67	25.77	2.94	44.79	1.13	53.71	74.00	-20.29	P
*	1301.63	-	-	-	-	-	42.50	54.00	-11.50	A
	1735.75	81.60	28.49	3.41	44.41	0.63	69.71	80.83	-11.11	P
	1735.75	-	-	-	-	-	58.50	60.83	-2.33	A
	2169.73	75.33	30.40	3.76	43.93	0.41	65.97	80.83	-14.86	P
	2169.73	-	-	-	-	-	54.75	60.83	-6.07	A
	2603.79	72.89	30.06	4.02	43.60	0.38	63.75	80.83	-17.07	P
	2603.79	-	-	-	-	-	52.54	60.83	-8.29	A
	3037.38	78.08	30.31	4.31	43.28	0.28	69.70	80.83	-11.13	P
	3037.38	-	-	-	-	-	58.49	60.83	-2.34	A
	3471.51	65.99	30.39	4.56	43.01	0.23	58.18	80.83	-22.65	P
	3471.51	-	-	-	-	-	46.96	60.83	-13.86	A
*	3905.59	60.39	30.89	4.81	42.74	0.32	53.67	74.00	-20.33	P
*	3905.59	-	-	-	-	-	42.46	54.00	-11.54	A
*	4339.26	62.37	31.75	5.11	42.65	0.31	56.88	74.00	-17.12	P
*	4339.26	-	-	-	-	-	45.67	54.00	-8.33	A
*	4773.43	60.94	32.97	5.43	42.61	0.35	57.09	74.00	-16.91	P
*	4773.43	-	-	-	-	-	45.88	54.00	-8.12	A
	5207.62	62.44	33.78	5.71	42.62	0.33	59.64	80.83	-21.19	P
	5207.62	-	-	-	-	-	48.43	60.83	-12.40	A
	5641.24	68.04	34.07	5.90	42.69	0.23	65.55	80.83	-15.28	P
	5641.24	-	-	-	-	-	54.34	60.83	-6.49	A
	6075.02	61.87	34.65	6.00	42.74	0.27	60.06	80.83	-20.77	P
	6075.02	-	-	-	-	-	48.85	60.83	-11.98	A
	6508.66	61.86	35.54	6.24	42.73	0.34	61.25	80.83	-19.57	P
	6508.66	-	-	-	-	-	50.04	60.83	-10.79	A
*	4942.38	60.43	33.52	5.56	42.60	0.39	57.30	74.00	-16.70	P

This document cannot be reproduced except in full, without prior written approval of the Company. 本報告未經本公司書面許可，不可部份複製。

*	4942.38	-	-	-	-	-	46.09	54.00	-7.91	A
*	7376.11	57.61	39.33	6.60	42.21	0.32	61.65	74.00	-12.35	P
*	7376.11	-	-	-	-	-	50.44	54.00	-3.56	A

Remark:

1. Measuring frequencies from 1 GHz to the 10th harmonic of highest fundamental frequency.
2. Radiated emissions measured in frequency above 1000MHz were made with an instrument using peak/average detector mode.
3. Average test would be performed if the peak result were greater than the average limit or as required by the applicant.
4. Data of measurement within this frequency range shown " --- " in the table above means the reading of emissions are attenuated more than 20dB below the permissible limits or the field strength is too small to be measured.
5. Measurements above show only up to 6 maximum emissions noted, or would be lesser, with " N/A " remark, if no specific emissions from the EUT are recorded (ie: margin>20dB from the applicable limit) and considered that's already beyond the background noise floor.
6. Level (QP)=Reading +AF +Cable Loss -Pre-amp +Filter
   Margin= Level -Limit
   Level (Average)=Peak level +Duty factor
7. *=Restricted bands of operation
8. The Value of Duty factor reference to original test report(T201116N02-RP1).

This document cannot be reproduced except in full, without prior written approval of the Company. 本報告未經本公司書面許可，不可部份複製。

Report No.: T210705N01-RP1 Ref. No.: T201116N02-RP1

Operation Mode:	TX	**Test Date:**	2021/07/14
Temperature:	26.2℃	**Tested by:**	Ted Huang
Humidity:	55% RH	**Polarity:**	Ver. / Hor.

Vertical

	Freq.	Reading	AF	Cable Loss	Pre-amp	Filter	Level	Limit	Margin	Mark
	(MHz)	(dBμV)	(dB/m)	(dB)	(dB)	(dB)	(dBμV/m)	(dBμV/m)	(dB)	(P/Q/A)
*	1302.00	61.68	25.77	2.94	44.79	1.13	46.72	74.00	-27.28	P
*	1302.00	-	-	-	-	-	35.51	54.00	-18.49	A
	1735.73	72.44	28.49	3.41	44.41	0.63	60.55	80.83	-20.27	P
	1735.73	-	-	-	-	-	49.34	60.83	-11.49	A
	2169.56	71.63	30.40	3.76	43.93	0.41	62.26	80.83	-18.56	P
	2169.56	-	-	-	-	-	51.05	60.83	-9.78	A
	2603.46	69.81	30.06	4.02	43.60	0.38	60.66	80.83	-20.16	P
	2603.46	-	-	-	-	-	49.45	60.83	-11.38	A
	3037.32	75.73	30.31	4.31	43.28	0.28	67.34	80.83	-13.48	P
	3037.32	-	-	-	-	-	56.13	60.83	-4.69	A
	3471.34	66.78	30.39	4.56	43.01	0.23	58.96	80.83	-21.86	P
	3471.34	-	-	-	-	-	47.75	60.83	-13.07	A
*	3905.17	61.22	30.89	4.81	42.74	0.32	54.50	74.00	-19.50	P
*	3905.17	-	-	-	-	-	43.29	54.00	-10.71	A
*	4339.41	61.98	31.75	5.11	42.65	0.31	56.49	74.00	-17.51	P
*	4339.41	-	-	-	-	-	45.28	54.00	-8.72	A
*	4773.31	60.04	32.97	5.43	42.61	0.35	56.18	74.00	-17.82	P
*	4773.31	-	-	-	-	-	44.97	54.00	-9.03	A
	5207.16	61.20	33.78	5.71	42.62	0.33	58.40	80.83	-22.43	P
	5207.16	-	-	-	-	-	47.19	60.83	-13.64	A
	5641.28	72.23	34.07	5.90	42.69	0.23	69.74	80.83	-11.09	P
	5641.28	-	-	-	-	-	58.53	60.83	-2.30	A
	6074.86	63.90	34.65	6.00	42.74	0.27	62.09	80.83	-18.74	P
	6074.86	-	-	-	-	-	50.87	60.83	-9.95	A
	6508.74	63.44	35.54	6.24	42.73	0.34	62.83	80.83	-17.99	P
	6508.74	-	-	-	-	-	51.62	60.83	-9.20	A
	6942.43	62.85	37.62	6.49	42.71	0.34	64.59	80.83	-16.24	P
	6942.43	-	-	-	-	-	53.38	60.83	-7.45	A

This document cannot be reproduced except in full, without prior written approval of the Company. 本報告未經本公司書面許可，不可部份複製。

*	7376.00	57.85	39.33	6.60	42.21	0.32	61.89	74.00	-12.11	P
*	7376.00	-	-	-	-	-	50.68	54.00	-3.32	A

Remark:

1. Measuring frequencies from 1 GHz to the 10th harmonic of highest fundamental frequency.
2. Radiated emissions measured in frequency above 1000MHz were made with an instrument using peak/average detector mode.
3. Average test would be performed if the peak result were greater than the average limit or as required by the applicant.
4. Data of measurement within this frequency range shown " --- " in the table above means the reading of emissions are attenuated more than 20dB below the permissible limits or the field strength is too small to be measured.
5. Measurements above show only up to 6 maximum emissions noted, or would be lesser, with " N/A " remark, if no specific emissions from the EUT are recorded (ie: margin>20dB from the applicable limit) and considered that's already beyond the background noise floor.
6. Level (QP)=Reading +AF +Cable Loss -Pre-amp +Filter
   Margin= Level -Limit
   Level (Average)=Peak level +Duty factor
7. *=Restricted bands of operation
8. The Value of Duty factor reference to original test report(T201116N02-RP1).

=== END of Report ===

This document cannot be reproduced except in full, without prior written approval of the Company. 本報告未經本公司書面許可，不可部份複製。