Megger

Metrysense5000

Smart Grid Sensor

USER GUIDE

VER 2.18

FCC Statements

This device complies with Part 15 of the FCC Rules. Operation is subject to the following two conditions:
(1) This device may not cause harmful interference, and
(2) This device must accept any interference received, including interference that may cause undesired operation.

Changes or modifications not expressly approved by the party responsible for compliance could void the user's authority to operate this equipment.

Note: This equipment has been tested and found to comply with the limits for a Class B digital device, pursuant to part 15 of the FCC Rules. These limits are designed to provide reasonable protection against harmful interference in a residential installation. This equipment generates, uses and can radiate radio frequency energy and, if not installed and used in accordance with the instructions, may cause harmful interference to radio communications. However, there is no guarantee that interference will not occur in a particular installation. If this equipment does cause harmful interference to radio or television reception, which can be determined by turning the equipment off and on, the user is encouraged to try to correct the interference by one or more of the following measures:
— Reorient or relocate the receiving antenna.
— Increase the separation between the equipment and receiver.
— Connect the equipment into an outlet on a circuit different from that to which the receiver is connected.
— Consult the dealer or an experienced radio/TV technician for help.

WARNING – RF EXPOSURE COMPLIANCE: This equipment should be installed and operated with a minimum distance 17.2cm between the radiator and your body.

-This Class B digital apparatus complies with Canadian ICES-003.
-Cet appareil numerique de la classe B est conforme a la norme NMB-003 du Canada.

IC Statements

This device contains licence-exempt transmitter(s)/receiver(s) that comply with Innovation, Science and Economic Development Canada's licence-exempt RSS(s). Operation is subject to the following two conditions:
(1) This device may not cause interference.
(2) This device must accept any interference, including interference that may cause undesired operation of the device.

L'émetteur/récepteur exempt de licence contenu dans le présent appareil est conforme aux CNR d'Innovation, Sciences et Développement économique Canada applicables aux appareils radio exempts de licence. L'exploitation est autorisée aux deux conditions suivantes :
1) L'appareil ne doit pas produire de brouillage;
2) L'appareil doit accepter tout brouillage radioélectrique subi, même si le brouillage est susceptible d'en compromettre le fonctionnement.

AVERTISSEMENT – CONFORMITÉ AUX NORMES D'EXPOSITION AUX RF : Cet équipement doit être installé et utilisé à une distance minimale de 17.2cm entre le radiateur et votre corps.

Introduction

1.1 Overview

MetrySense-5000 is an advanced and proven smart grid sensor system, that can reliably detect faults in grids with different grounding systems including high impedance faults.

The advantages of the system are:

- Reliable and fast localization of faults, including feeders with branches. Faults are detected locally by the sensors. Fault detection is achieved using advanced algorithms with proven results in the field and inextensive field tests.
- Direct connection to the SCADA/DMS system via the DNP3 protocol including reporting of periodic measurements, fault events and waveforms recorded during faults
- Reduction of outage times
- Provision of online status of the entire sensor network

1.2 MS5000 GS Set

MetrySense-5000 (MS5000) system supports various flexible and modular deployment options, this guide refers to a GS-system, in which each set includes one cellular Gateway Sensor (MS5000-GS) and 2 Sensor Units (MS5000-SU), all installed on one pole.

Installation, mounting, commissioning and operation of the system must be done only by trained experts which are familiar with these types of products and have the required qualifications. The work must be done with strict compliance to all the regulations of the power utility.

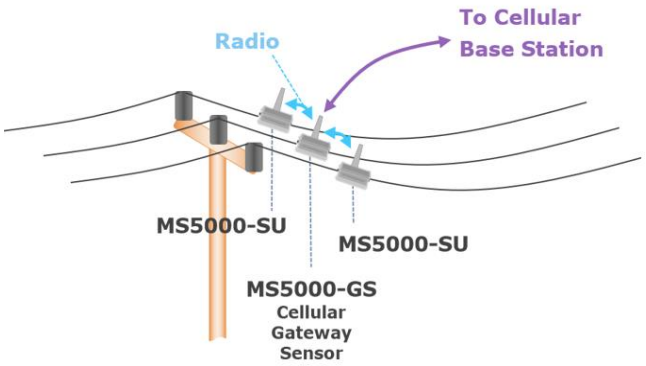

Figure 1: Set of 2 x MS5000-SU sensors and a MS5000-GS Sensor/Gateway

The set of 3 sensors includes one cellular Gateway Sensor (MS5000-GS) which includes a 4G cellular modem and communicates with the server via the cellular network, and two Slave Sensors Units (MS5000-SU) which communicate with the Gateway Sensor over RF. The Gateway Sensor (MS5000-GS) has two functions: it functions as a Gateway and also functions as a Sensor Unit.

When a fault occurs, all 3 sensors (GS and SUs), record the fault waveforms and other data. The slave Sensors immediately send their recordings of the fault to the Gateway Sensor. The Gateway Sensor collects the data, runs analysis algorithms on the complete 3-phase information in order to make a local decision about the fault, and sends the result to the server via the cellular network.

2. Preparing the GS for installation

2.1 Choosing mobile operator and a SIM card

2.1.1 Choose a mobile operator that has a good cellular coverage in the site where the Gateway is to be installed. The cellular operator should support the protocol and frequencies of the gateway (please see the MS3010-GW datasheet for the cellular options).

2.1.2 Prepare a SIM card for each gateway. The SIM should:

- Support the protocols and frequencies of the selected MS3010-GW cellular option.
- SIM size: **Micro SIM.**
- Have a SMS service package (send and receive).
- Data and SMS are opened also for international communication.
- PIN code is disabled.
- The data package should be at least 0.1 GB per month.
- The SIM is activated.

2.1.3 Please get the following information and keep it in case that it will be required:

- The SIM card's APN (Should be provided by the mobile operator).
- The SIM card's serial number.
- The SIM card's phone number.

2.2 Inserting SIM card into GS

2.2.1 For this step please prepare:

Component	Description	Picture
MS5000 Gateway Sensor (GS)	labeled "MS5000-GS-xxx"	
Torx head screwdriver	for screws: SCR, TORX, round, SST, M3x6mm, SS (DIN7985))	

Component	Description	Modem Type	SIM Size	Picture
SIM Card	A SIM card must be prepared for each gateway	4G	Micro SIM	

For a new operator or SIM type it is recommended to test cellular connectivity in advance before the installation.

2.2.2 The SIM socket is located under the GS cover, therefore GS needs to be opened first.

a) Place the GS on your workspace, antenna pointing upward.

b) Loosen the **Main clamp screw** at the bottom of the sensor by turning counter-clockwise.

c) Loosen the **Secondary clamp screw** by turning counter-clockwise.

d) Unlock the **Pipe pins** from both sides and remove them totally. GS is now separated into two parts.

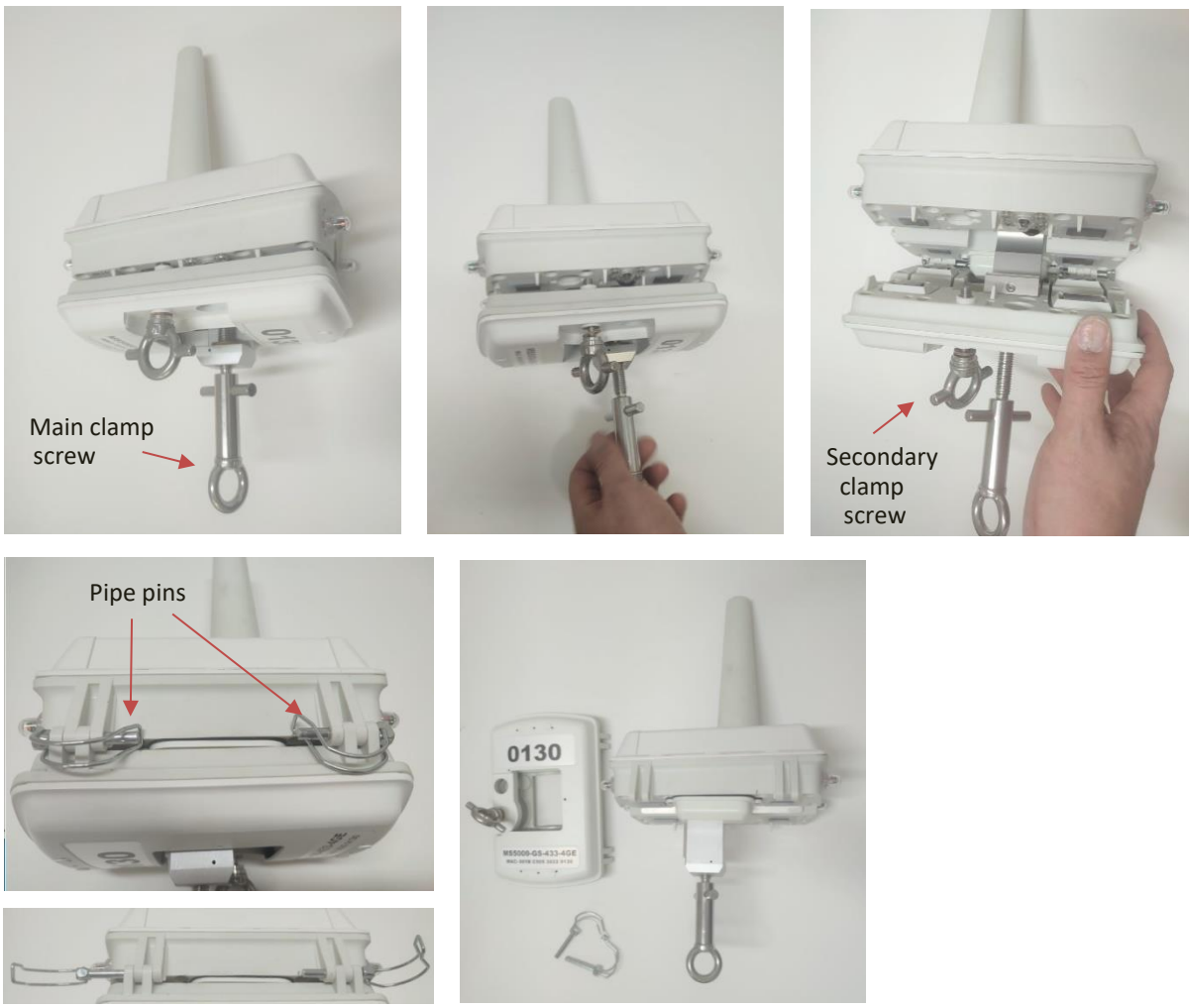

Figure 2: opening GS cover for inserting SIM card

2.2.3 Take out the **Battery Pack** to get to SIM socket:

a) Take the top part of the GS.

b) Using a Torx head screwdriver, loosen the 2 Torx screws and carefully take out the Battery Pack, and put aside the GS, while the battery wires remain connected.

2.2.4 Insert the **Micro SIM** into SIM socket. SIM card is well inserted when there's a sound of "**click**".

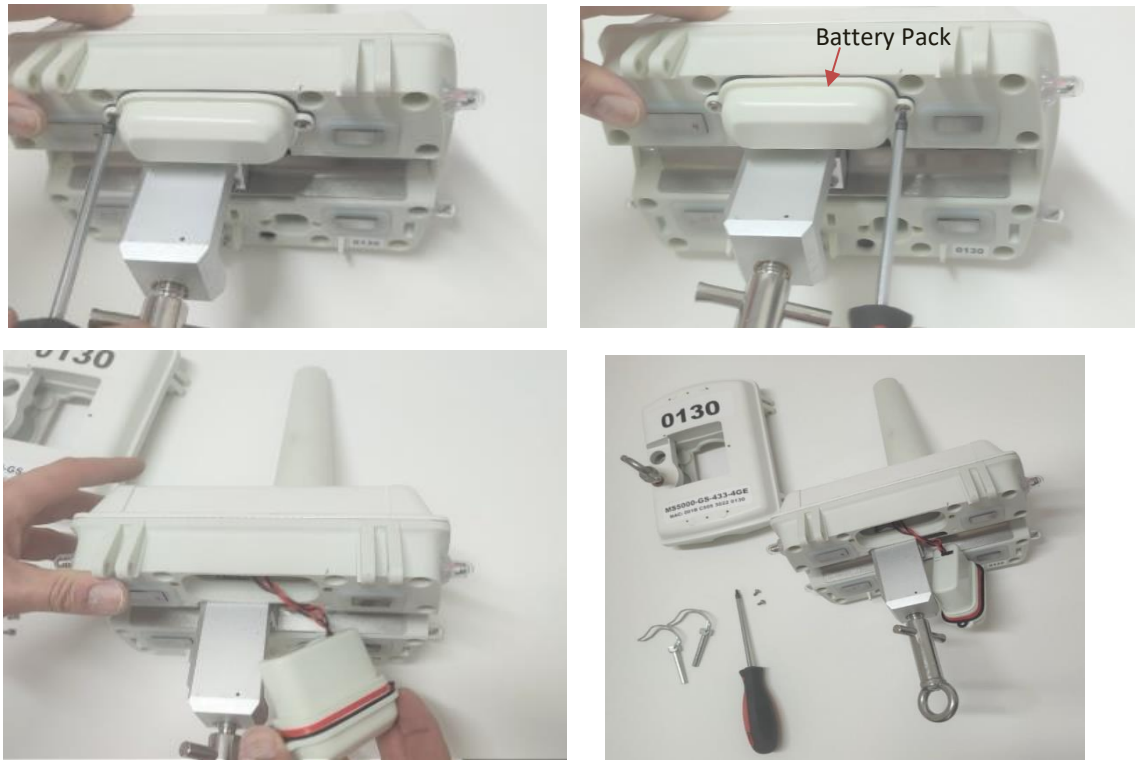

Figure 4: taking out the Battery Pack to reveal SIM slot

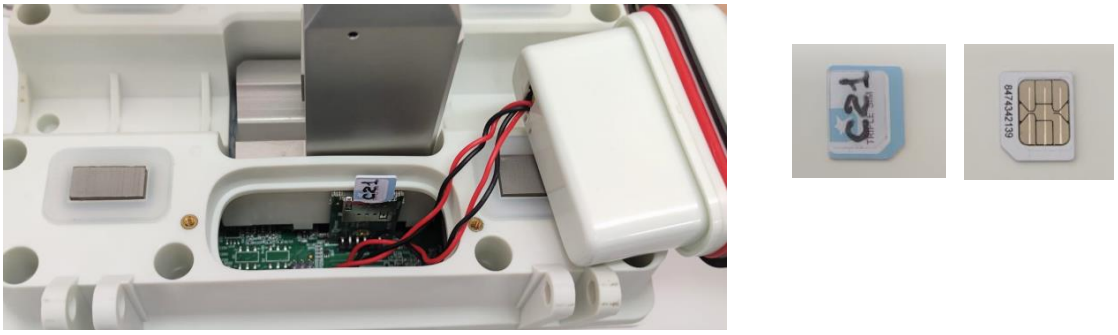

Figure 3: Inserting micro-SIM card into SIM socket

2.2.5 Put **Battery Pack** back into place and tighten the Torx screws. Leave the GS cover **unassembled** for the next step.

Note: Battery pack provided by Megger is safety approved. Do not attempt to use any other batteries.

2.3 Testing GS cellular connection

2.3.1 Take the top part of the GS (the part that includes the antenna).

2.3.2 Turn GS power on:

Press the **Power Button** to turn on the Gateway Sensor. When GS is turned on **Main Led** shows light Indication regarding unit's battery status:

GS Main Led - light Indication (initial indication, following short press on Power Button)	**Meaning**
3 short blinks	Battey is full
2 short blinks	Medium Battery level
1 blink	Battery level is low GS requires charging for full functionality

This light Indication is only shown **once** after pressing the button.

2.3.3 Afterwards, the **Main Led** will indicate GS's cellular connection to MetryView server:

GS Main Led - light Indication (while GS is on, long run indication)	**Mode**	**Meaning**
3 blinks, every 5 seconds - connnected	Connected	GS has successfully connected to MetryView server
2 blinks, every 5 seconds	Scanning	GS is scanning, trying to connect to cellular network and MetryView Server
1 blink, every 5 seconds	Power Save	Power Save mode. GS is not connected to server and doesn't try to connect. Pressing the button once, will immediately turn the GS back to Scanning mode for 15 minutes.

When GS is installed on power line and senses line current, long-run Led indication (of GS

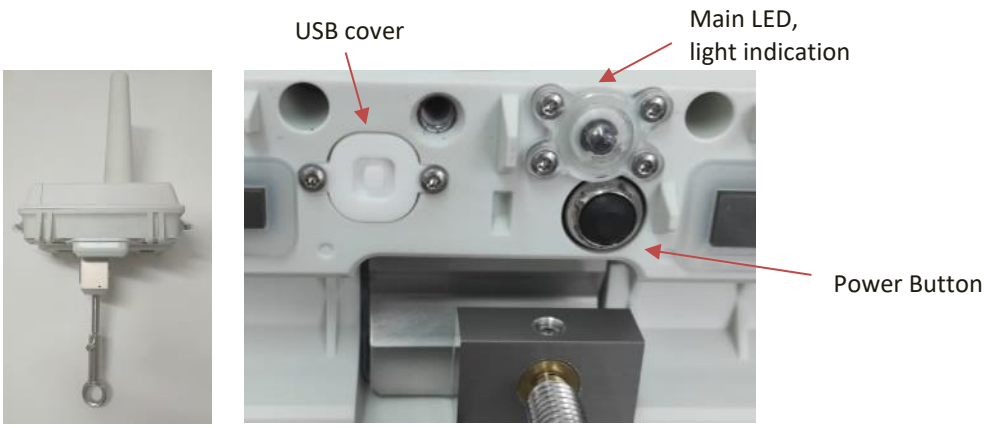

Figure 5: USB cover, Power Button and Main LED

connection status) continues for 1 hour and then stops.

When micro SIM card has been inserted, and GS is powered on – the GS is expected to show 2 blinks every 5 seconds (scanning), and move to 3 blinks (connected) in less than 2 minutes .
If GS hasn't connected within few minutes, please follow PC software installation and APN configuration steps.

3 Preparing your installation plan

3.1 Planning MS5000 Sets deployment

Before installing the units in the field, it is recommended to plan the installation in advance in collaboration with Megger Grid Analytics.

Note: the location of pole on which MS5000 GS Set will be installed must have a good cellular reception.

3.2 Preparing a schematic of planned MS5000 Sets deployment

Information collected from each MS5000 Set will be gathered the GS, sent to server via cellular network, and shown on web portal. Plan your MS5000 Sets deployment on transmission line ahead:

3.2.1 Prepare a deployment plan schematic, with the following specifications:

a) The schematic should include the substation, transmission line, towers and the deployment of sensors.

b) The schematic can include additional components:

- Open\closed Circuit Breaker (CB)
- Open\closed switch

c) The schematic can be revised when necessary.

3.2.2 Send the schematic to Megger Grid Analytics (MGA) in advanced. MGA will configure the settings for the web portal.

3.2.3 An example of line Schematics:

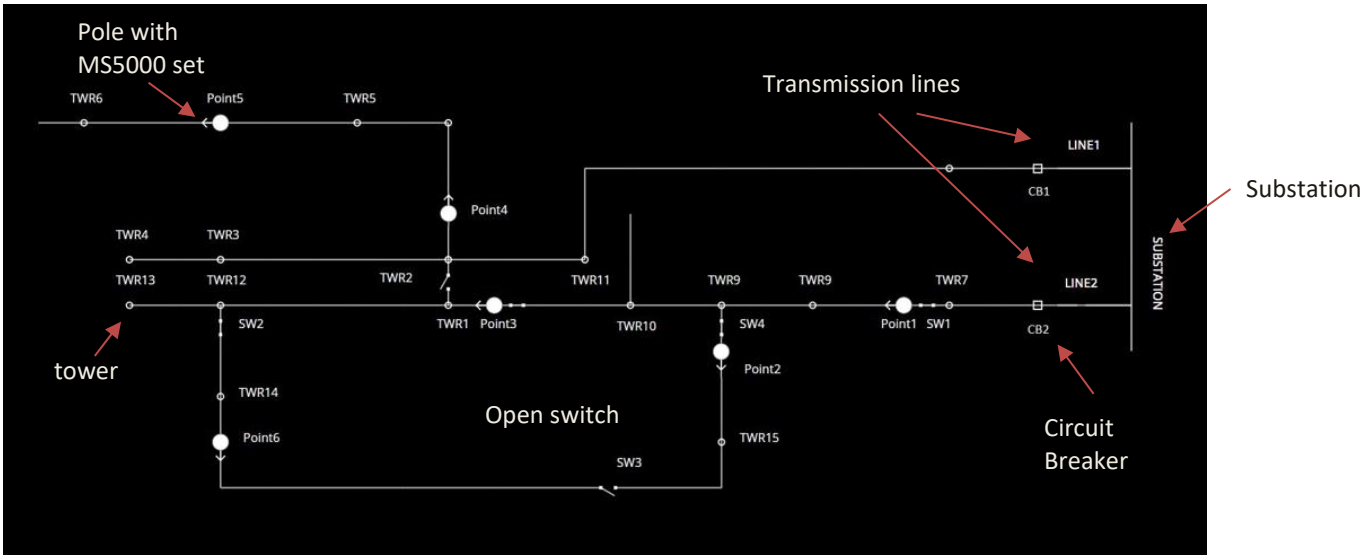

Figure 6: Prepare a schematic of planned MS5000 Sets deployment

3.3 MetryView web portal information:

3.3.1 Receive from Megger the web portal information details: URL address, username and password.

3.3.2 Coordination of poles can be updated by Megger, to show the exact location of MS5000 Sets on the map.

4. PC Software installation (optional)

The following drivers and software applications can be installed on PC for direct configuration of GS/Sensors, through a USB cable. BLoader software can also be used to perform MS5000 GS/Sensors software upgrade, or other configurations as well, if necessary.

If GS shows LED indication of scanning for cellular network, but **not connecting** yet – 2 blinks every 5 seconds, then PC software installation is required.

4.1 Installing the Sensor's and Gateway's USB driver

4.1.1 In the software package provided by MGA, open folder MS5000 PC Software\CP2105 USB Driver.

- For Windows 64 bit systems: run **CP210xVCPInstaller_x64.exe**.
- For Windows 32 bit systems: run **CP210xVCPInstaller_x86.exe**.

4.1.2 Complete the installation using the installation's defaults.

4.2 Installing TeraTerm:

Tera Term is an open-source, free, software implemented, terminal emulator program. It is used for direct textual communication with MS5000 units.

4.2.1 Open folder **MS5000 PC Software\Teraterm**.

4.2.2 Double-click on the Tera Term installer **teraterm-4.97.exe**.

4.2.3 Complete the installation according to the installer instructions.

4.2.4 Open Tera Term application and configure the following settings:

a) From the menu choose **Setup → Terminal**
Under "New Line" Choose:
- Receive: LF
- Transmit: CR+LF

Mark "Local echo" and click "OK".

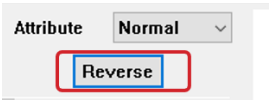

b) From the menu choose **Setup → Window**
Click on "Reverse" and click "OK".

c) From the menu choose Setup → **Serial Port**
Choose Baud Rate: 38,400 and click "OK".

d) From the menu choose **Setup → Save Setup**.
Use default location and filename (Teraterm.ini) and click "Save".

4.3 Installing MGA BLoader:

BLoader is a MGA application for viewing and configuring MS5000 units parameters using direct USB connection.

4.3.1 Open folder **MS5000 PC Software\BLoader**.

4.3.2 Run BLoader Installer ***.exe**.

4.3.3 Complete the installation using the installation's defaults.

5. Modifying Gateway's APN Configuration using BLoader

5.1 Connecting GS to PC

5.1.1 Please prepare the following:

Component	Description	Picture
Opened GS	GS separated to top cover and lower cover, and 2 pipe pins aside.	
A to B USB Cable	USB cable for connecting Gateway or Sensor to PC	
Torx head screwdriver	for screws: SCR, TORX, round, SST, M3x6mm, SS (DIN7985))	

5.1.2 Connect the GS to PC:

a) GS USB connector is located under the USB cover. Using the Torx head screwdriver, loosen the screws that holds the **USB cover** and remove it (see Figure 5, page 6).

b) Plug in the A-type **USB cable** end to PC, and B-type end to the GS terminal.

5.2 Configuring APN using Bloader

5.2.1 Open MGA BLoader application by double clicking on desktop's shortcut,

Or run **C:\Program Files (x86)\Megger\BLoader\BLoader.exe.**

BLoader software, can be used for viewing information, status and other configuration of GS and Sensors.

5.2.2 The BLoader main window:

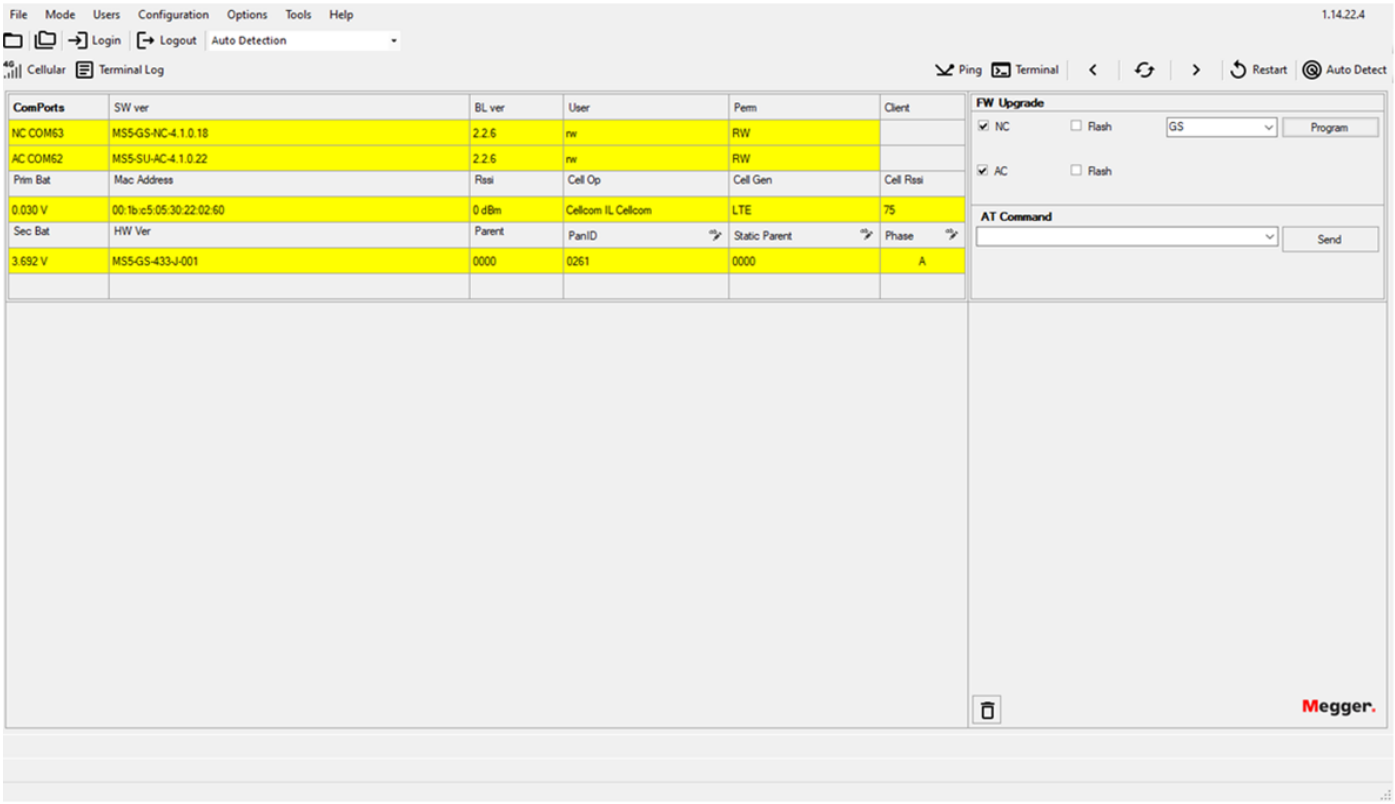

Figure 7: BLoader, main window

5.2.3 Click on "Login" to enable serial connection with the GS, fill in User and Password provided by MGA. Available Users:

User	User Permissions
RW	Read-Write
RO	Read Only
PR	Password Reset
UPG	Upgrade GS or Sensor's software
NA	Logged out, permissions to read unit's basic information only (MAC Address, software version, etc.

5.2.4 Configure the SIM's cellular network:

a) Click on "**Cellular**". Cellular Configuration window opens (see Figure 8).

b) Fill in SIM's Information:

- The SIM card's APN (Should be provided by the mobile operator).
- APN username
- APN password

c) Click "**Save**" button , to set the configuration.

5.3 Verifying cellular connection (optional)

5.3.1 Verify GS network connection: Wait for a minute and use the "Refresh" button, to verify the connection to cellular network using the SIM.

5.3.2 In addition to verifying the connection by viewing the updated details on BLoader's Cellular Configuration window, the Main Led will show indication of connecting to cellular network - 3 blinks every 5 seconds.

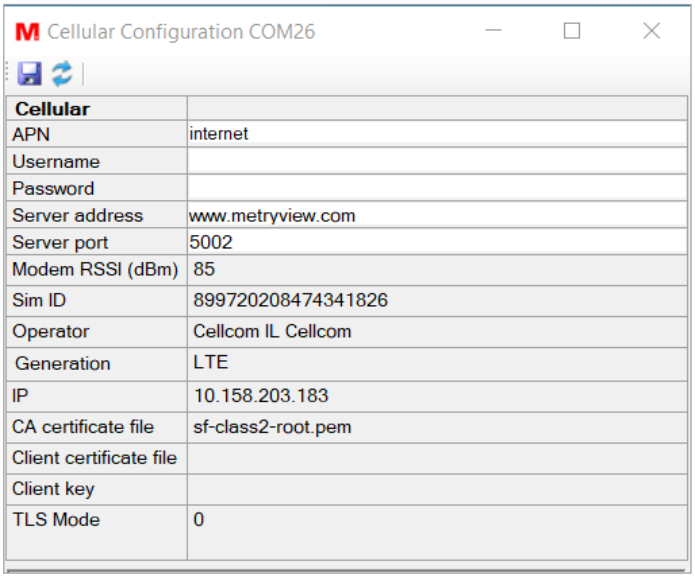

Cellular	
APN	internet
Username	
Password	
Server address	www.metryview.com
Server port	5002
Modem RSSI (dBm)	85
Sim ID	899720208474341826
Operator	Cellcom IL Cellcom
Generation	LTE
IP	10.158.203.183
CA certificate file	sf-class2-root.pem
Client certificate file	
Client key	
TLS Mode	0

Figure 8: BLoader, Cellular

5.3.3 Once cellular connection to MetryView server has been established, turn off and re-assemble the GS:

a) Disconnect the USB cable from the GS.

b) Turn off Gateway Sensor by pressing and holding the **Power Button** for more than 5 seconds. When the LED light will turn on constantly release the button. The LED should stop lighting and the GS will turn off.

c) Put **USB Cover** back in place and tighten the screws.

d) Hold the two cover parts together, place and lock the **Pipe pins** on both sides.

e) Tighten the **Side clamp screw** by turning clockwise.

f) Tighten the **Main clamp screw** by turning clockwise.

6. Testing the Set pre-installation (optional)

Testing of a Set can be done prior to field installation. Here are the steps to test the system:

6.1 Opening units at 45 degrees angle

6.1.1 Take a **Set** of GS System:

A Set includes a Gateway Sensor and 2 Sensor Units, which have been paired together as a set.

In order to enable "Plug and Play" installation without configuration, each 2 sensors are usually paired in advance with a specific Gateway Sensor in the factory by MGA.
It is possible to change the pairing of sensors and gateways. For more Information, view BLoader guide.

Each sensor in the set includes the following **Labels**:

- Label with unit's Part Number MS5000-XX-XXX and unit's unique MAC address.
- Label for identifying the unit - 4 last chars of MAC address in bold.
- Phase Label - each sensor in the set includes a label that defines its electric phase: "A", "B" or "C".
- Set Number - usually the 4 last digits of **GS**'s MAC address. Helps to identify the set easily.

6.1.2 Open the GS and 2 SUs at 45 degrees angle. For each unit (GS or sensor):

a) Loosen the **Main clamp screw** at the bottom of the sensor by turning counter-clockwise.

b) Loosen the **Secondary clamp screw** by turning counter-clockwise.

c) Open the unit at 45 degrees angle.

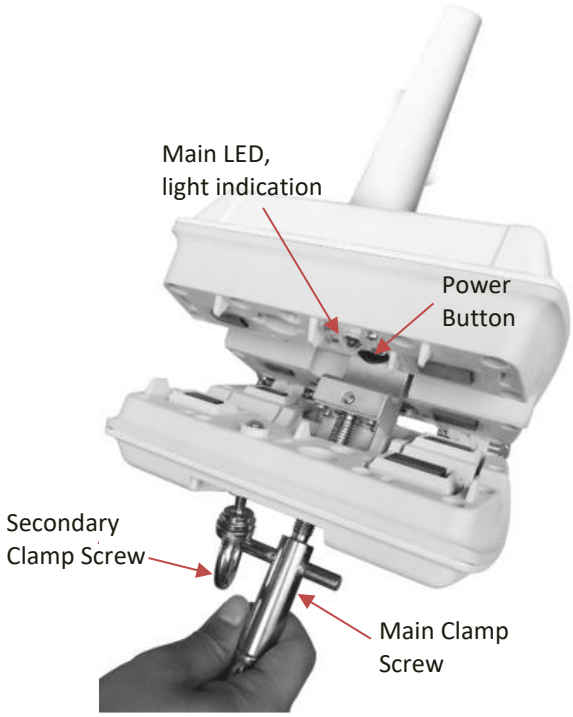

Figure 9: Opening GS or SU cover at 45 degrees

6.2 Testing the Set's cellular and RF connection using the LEDs

6.2.1 Turn GS on by pushing the Power Button (See Figure 5).

6.2.2 Test GS's status, by looking at the **Main Led**:

a) When a GS or a Sensor Unit Is turned on, at first the Main Led shows light Indication regarding unit's battery status:

GS or Sensor Unit - Main Led - light Indication (initial indication)	**Meaning**
3 short blinks (3 per second)	Battey is full
2 short blinks (2 per second)	Medium Battery level
1 blink	Battery level is low GS in Power Save mode

This light Indication is only shown **once** after pressing the button.

b) Afterwards looking at GS's Main Led indicates Server connection status:

GS Main Led - light Indication (long-run indication)	**Meaning**
3 blinks, every 5 seconds	GS has connected to cellular network
2 blinks, every 5 seconds	GS is scanning, trying to connect to cellular network
1 blink, every 5 seconds	GS is in a Power Save mode, not attempting cellular connection.

6.2.3 Turn Sensors on by pressing their **Power Button**.

6.2.4 For each Sensor, watch the **Main Led** indication:

a) At first, the Main Led shows indication for each Sensor's **Battery Level**.

b) Then, the next long-run indication refers to the RF connection status between Gateway and Sensors:

Sensor Unit Main Led - light Indication (long-run indication)	**Meaning**
3 short blinks	Sensor Unit has connected to GS
2 short blinks	Sensor Unit is scanning, trying to connect to GS
1 blink	Sensor Unit is in a Power Save mode

GS and Sensors batteries can be charged from line current, or by connecting to computer using USB cable. When units are not being used, it's important to turn them off in order to save battery power.

When unit is installed on the line (either GS or Sensor Unit) and senses line current, the long-run LED indication continues for 1 hour (configurable) and then stops.

6.3 MetryView web portal results

6.3.1 View data recorded from the Set on MetryView website. When Set is up and running, the sensors' Sampling results and Fault events can be viewed.

a) Go to **https://st1.metryview.com/** and login using Username and Password, provided by Megger.

b) Verify that periodic measurements of voltage and current of the sensor under test are presented on the web portal.

c) For more information, see MetryView Web Portal guide.

6.4 Remote sensor configuration using the RC-Tool (Remote Configuration Tool)

The RC-Tool is a PC application that can connect to sensors from remote. The user can log-in and configure the sensor's parameters. The RC-Tool is also used for uploading new software versions to the sensors from remote.

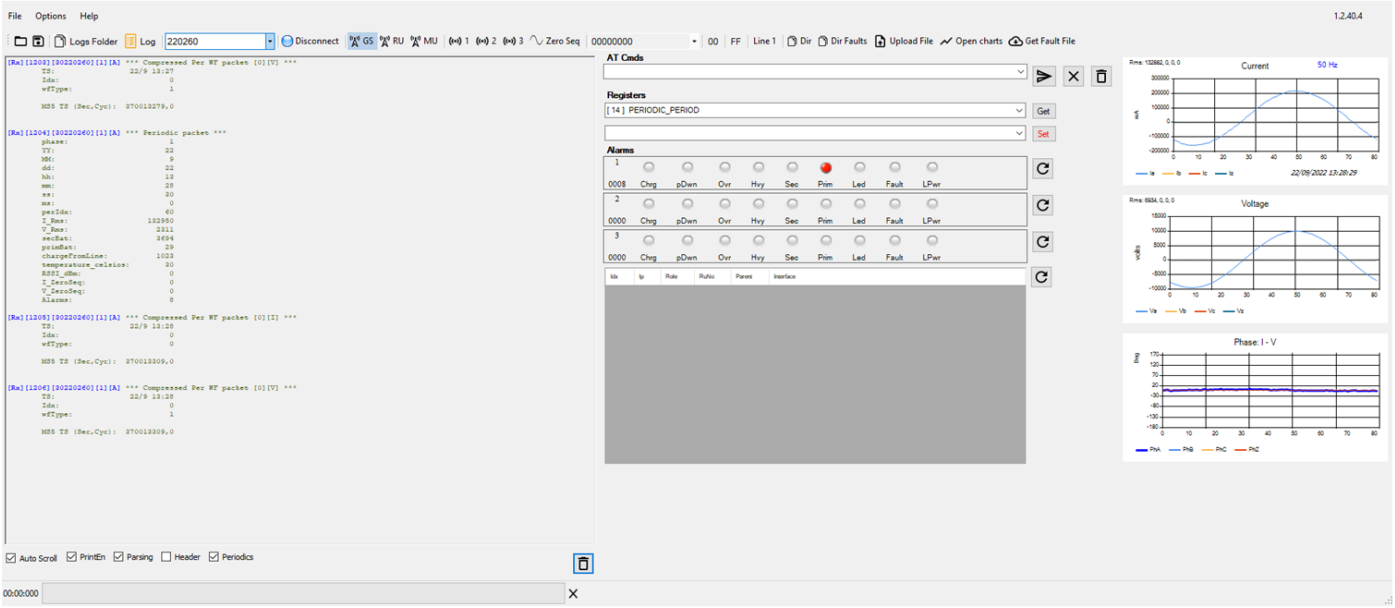

Figure 10: The main screen of the RC-Tool

The configuration of parameters (e.g. alarms' thresholds) is done by first selecting a target sensor (sensor #1, #2 or #3) and then choosing a register to configure. The configuration is done by Get and Set buttons which are used to read and write values of the register.

The RC-Tool also shows the status of the sensor including display of alarms and sampled current and voltage.

6.5 Adding or changing location of sensors and allocation to phases using MetryView

MetryView includes definition of physical points in the grid where sets of sensors can be placed. The physical points are a part of the simplified schematic diagrams of the lines that are entered into the system. A physical point name is assigned to each point (e.g. a point's name can be "Point1", "Point2", or any other name) and in addition a description field is optionally assigned to each point (e.g. "Near tower 541 towards Tower 542"). The system is also automatically assigning a unique identifying number to each physical point (PointID). Assigning new sets of sensors to physical points can be done in MetryView using the following table:

Locations (Physical Points)				Sensors					
Point ID	Point Name	Point Description	Line	Sensor #1 (GS)		Sensor #2 (SU)		Sensor #3 (SU)	
				IEEE Address	Phase	IEEE Address	Phase	IEEE Address	Phase
3	Point4				A		B		C
2	Point5				A		B		C
4	Point1				A		B		C
6	Point3				A		B		C
1	Point6				A		B		C
5	Point2				A		B		C

Figure 11: MetryView sensor addresses configuration table – assigning sensors to physical points in the network

The assigning of a set of three sensors to a physical point is simply done by entering the IEEE addresses of the three sensors that are used as a set to the relevant columns in the table (the columns' names are "Sensor #1 (GS)", "Sensor #2 (SU)", and "Sensor #3 (SU)". In a mesh radio solution sensor #1 can also be a MU.

Note that the sensors #1, #2 and #3 are already configured as a set when they are supplied by the factory and they are marked with a labels "A", "B", "C", or "1", "2", "3" respectively. Creating a new set is possible by configuring the two SU sensors (Sensor #2 and Sensor #3) to join the GS sensor using the B-Loader application via USB or using the RC-Tool via a remote connection. Note that sensor #1 is always the GS (i.e., it is the main sensor that includes cellular and radio communication). Sensor #1 arrives from the factory with label "A" or "1". Sensors #2 and #3 are SUs (Secondary sensors units that include only radio connection in order to connect the GS). Sensor #2 arrives from the factory with the label "B" or "2". Sensor #3 arrives from the factory with the label "C" or "3". It can be possible to change the number of a SU sensor from #2 to #3 or from #3 to #2, but this should be usually avoided in order to avoid confusion, and if this must be done due to shortage of sensors of a certain number then following the configuring of the new number (#2 o #3) to the sensor, it is recommended to also change the sticker on the sensor correspondingly.

It is recommended that Sensors #1, #2 and #3 of a set will be deployed on the wires of phase A, phase B and phase C respectively. But if the sensors were deployed in the wrong order on the wires, then this can be easily corrected by entering the actual correct phase (A, B or C) for each sensor (#1, #2 or #3) in the MetryView table above. After assigning the right phases to the sensors the information from the sensors will be displayed according to the updated phases. The correction of the phase will automatically apply to new data and also all the history before the update of the sensor's phase in MetryView.

The MetryView sensor addresses table also includes an option to change the name and description of the physical point itself. Once updated in the table, the point's name will be displayed on the diagram and in the network hierarchy right menu.

7. Installation of GS and Sensors Units

7.1 GS Set overview

Three sensors should be deployed in each location, one sensor on each phase. Note: referring to “sensor” also relates to GS which functions as a Gateway and as a Sensor.

The most common way is to install GS on phase A, and Sensor units on phases B and C.

P.N.	Component	Description	Picture
For Gateway Sensor: MS5000-GS- XXX-X Or MS5000-GS- XXX-X For Sensor Units: MS5000-SU- XXX Or MS5000- SU- XXX-X	MetrySense-5000 sensors: 1 GS + 2 SU	The three sensors are deployed on the overhead lines, one per phase. Each sensor continuously samples the current and voltage at a typical rate of 4.096kHz, and sends online periodic measurements to the gateway, including alarms and fault events.The sensors are charged by induction from the line from currents as low as 5A, and each sensor also has an internal backup battery that can operate for more than 8 years in low power mode even without any charging from the line. The sensor supports nominal currents up to 600A, andline voltages up to 36kV phase to phase. An ISM radio is used for internal Set communication (between GS and sensors) and the radio frequency is 433MHz or 915MHz which complies with your local license free regulations.	

MS5000 sensors without accessories should be used only for aluminum wires up to 70kV phase to phase.
For copper wires use the MS5000-AC-CP accessory
For insulated wires use the MS5000-AC-IN accessory
For voltages above 70kV and up to 140kV use the MS5000-HV accessory
See descriptions of the accessories below

7.2 MS5000 accessories for installation on different wire materials and for voltage above 70kV

7.2.1 The standard MS5000 sensor and its accessories:

The set of GS and 2 SUs must be suitable for the transmission line wires material, on which the set would be installed on and for the line's voltage. The MS5000 product Part Number options are as following:

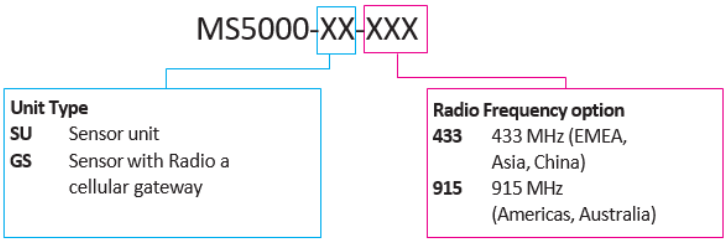

Accessories:

The basic MS5000 sensor should be installed only on Aluminum wires, and on lines of up to 70kV phase to phase. The following accessories should be used for installation on copper or insulated wires, and for higher voltage.

MS5000-AC-HV Clamp screw accessory used for line voltages above 70kV phase to phase. Replaces the standard main clamp screw which is supplied with MS5000. The MS5000-AC-HV clamp screw cannot be connected to a hot stick and must be installed by hand.

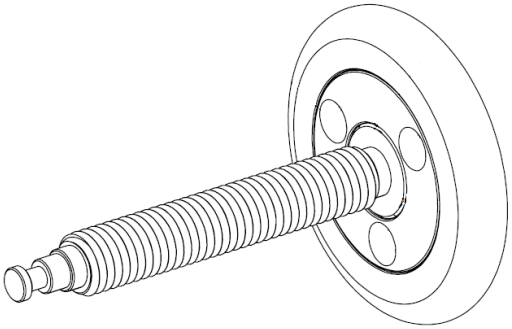

Figure 12: MS5000-AC-HV Clamp screw accessory for high voltage (above 70kV)

MS5000-AC-IN Bracket accessory made of Aluminum with hard anodize finish, which can be attached to the sensor for installation on insulated wires – used to improve the voltage measurement performance of MS5000

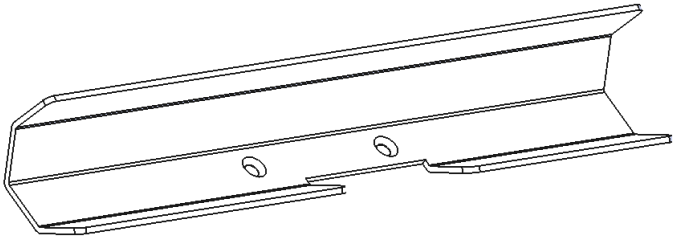

Figure 13: MS5000-AC-IN bracket

MS5000-AC-CP Contact clamp for Copper wires – made of Brass, replaces the standard Aluminum clamp which is supplied with MS5000

Warning: MS5000-AC-CP must be used ONLY for copper wires. Using it for installation on an Aluminum wire can cause galvanic corrosion which can damage the Aluminum wire.

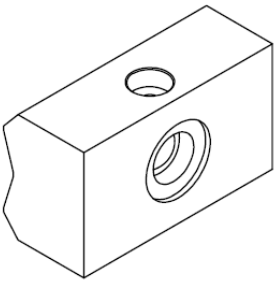

Figure 14: MS5000-AC-CP Brass clamp - used ONLY for installation on copper wires

7.2.2 Table of MS5000 units to be installed on each wire material:

Wire material and voltage	MS5000 units P/N to be used	Remark
cooperAluminum wire up to 70kV phase-to-phase	MS5000-GS / MS5000-SU	Standard MS5000 units
Line's voltage above 70kV phase to phase	MS5000-GS /MS5000-SU with MS5000-AC-HV clamp screw	Must be used only on insulated Wires
Cooper wire	MS5000-GS /MS5000-SU with MS5000-AC-CP brass contact clamp	Must be used only with copper wires!
Covered (insulated) wire	MS5000-GS /MS5000-SU with MS5000-AC-IN bracket	Must be used only on insulated wires

WARNING

1. Do not install MS5000 with MS5000-AC-CP on Aluminum wires.
   The Brass Clamp Contact is designed only for Copper wires and galvanic corrosion can damage the Aluminum wire
2. Installing standard **MS5000-SU or MS5000-GS** on Cooper wires can result in galvanic corrosion on MS5000 unit's aluminum clamp.

7.2.3 Installation of the accessories:

a. Installation of the MS5000-AC-HV clap screw for high voltage lines (see figure below)

(1) Remove screw that looks the aluminum contact clamp

(2) Disconnect the aluminum contact clamp from the standard main clamp screw

(3) Remove the standard main clamp screw from the sensor by turning it all the way out

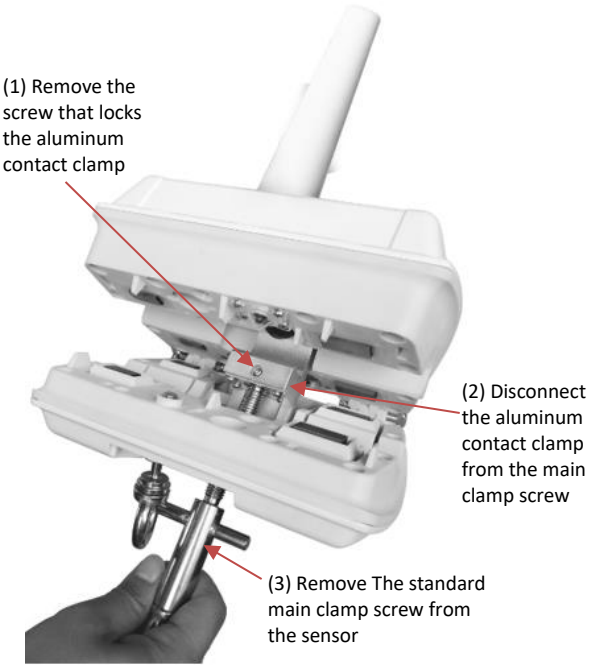

Figure 155: removing the standard clamp screw

(4) Insert the MS5000-AC-HV high voltage clamp screw instead of the standard clamp screw

(5) Connect back the aluminum contact clamp using its original screw

The following figure shows the MS5000-SU with the MS5000-AC-HV installed:

Figure 16 : The MS5000-SU with the MS5000-AC-HV clamp screw installed

b. Installation of the MS5000-AC-CP clamp screw accessory:

With reference to Figure 15:

(1) Remove screw that lacks the aluminum contact clamp

(2) Disconnect the aluminum contact clamp from the main clamp screw

(3) Connect the MS5000-AC-CP brass clamp for copper wires to the main clamp screw

(4) Fasten back the screw to lock the MS5000-AC-CP in its passion on the main clamp srew

c. Installation of the MS5000-AC-HV clamp screw accessory:

(1) Open the sensor and separate its to halves by removing the hinges.

(2) Then attach the MS5000-AC-IN adapter to the upper half of the sensor using two screws that are supplied with the MS5000-AC-IN:

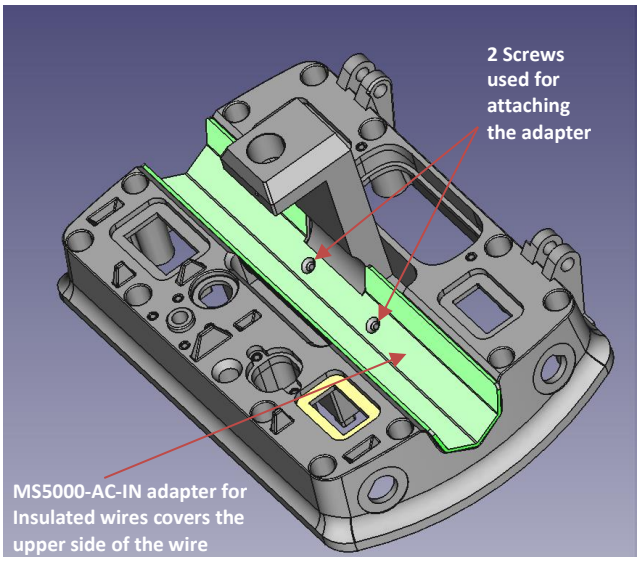

Figure 17: MS5000-AC-IN accessory

7.3 Dimensions of sensors

7.3.1 Dimensions of sensors:

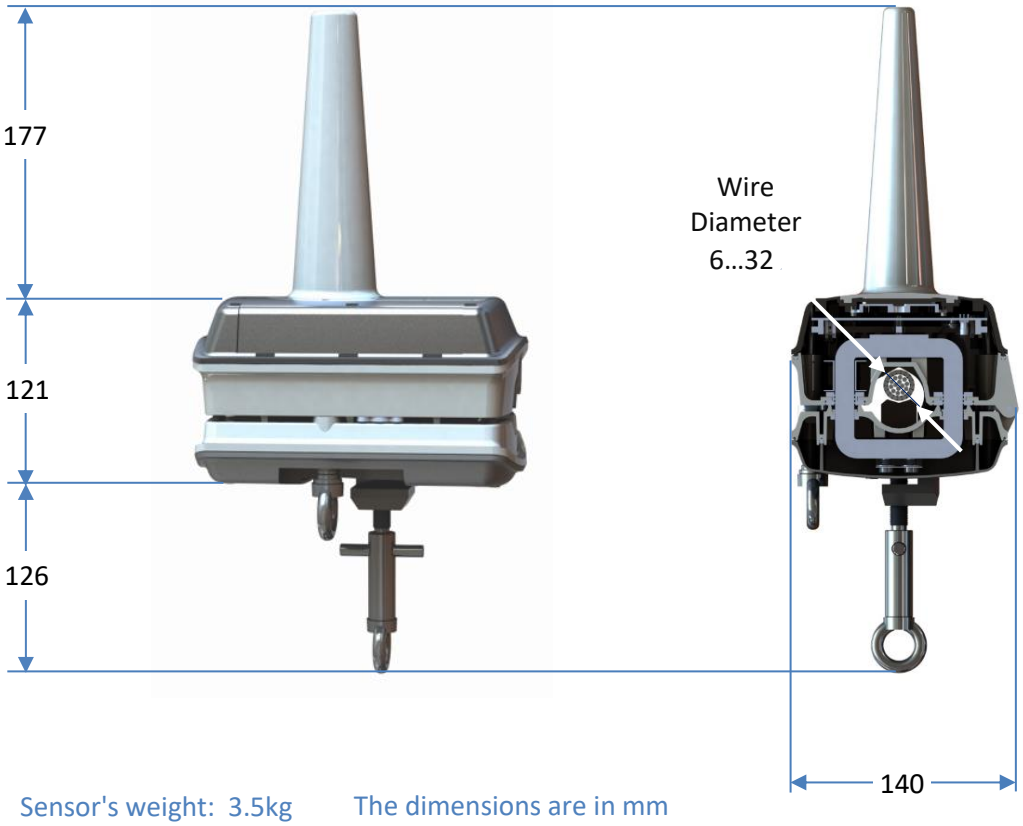

Figure 18: Sensor's dimensions (mm)

7.4 Tools for installation

The sensors are usually installed using a standard Grip-All “Shotgun” hot stick:

Component / Tool	Description	Picture
Standard Grip-All hot stick	Standard Grip-All “Shotgun” hot stick (equipped with a hook). For example: Hubbell Chance model number C4030291.	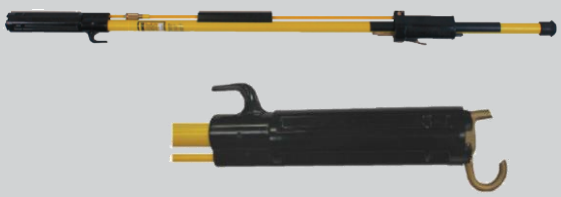
Crane or climbing equipment and a rope	Two options: 1. Use a Crane 2. Use climbing equipment **Remark:** A rope can be usefulfor pulling up the sensors and the gateway.	or

Alternatively, the sensors (including GS) can be installed by hand using insulated platform.
The installation of the sensors must be done according to the safety procedures of the power utility.

7.5 Installing the GS Set on the transmission line

7.5.1 Prepare a GS Set:

Take to field a set that includes a GS and 2 Sensors which are paired together, all turned off.

Before installation, please make sure that the 2 sensors and the GS have the same Set Number on the set label.

7.5.2 On the ground, turn on the units by pushing the Power Button:

When the units are in storage or during shipment, they are kept powered off in order to save power. Therefore, Before lifting the unit up the wires please perform the following steps to open the GS and 2 SUs at 45 degrees angle and turn them on: (see Figure 9)

a) Loosen the main clamp screw at the bottom of the sensor by turning counter-clockwise.
b) Loosen the secondary clamp screw by turning counter-clockwise.
c) Open the unit at 45 degrees angle.
d) Push the **Power Button** to turn unit on.

7.5.3 **Verify set connection *before* mounting on the line**:

⇨ Each unit should show Main Led indication of 3 blinks every 5 seconds.

For the GS it means it has established connection with server.
For the sensors it means they are synchronized with the GS.
To verify the communication, open *MetryView website* to see samples are being received every 5 minutes.

7.5.4 Follow the instructions on how to place sensors on the wires according to your preferred method - using a hot stick or direct installation by hand.

7.5.5 **Verify set connection *after* mounting on the line**:

When installation on the line has been completed, check again that the set is working properly, before leaving the location. Open MetryView website to see the samples received every 5 minutes with measured current values.

Also, in case the installation was coordinated with MGA team in advance (recommended), MGA team will support the installation and verify installation was successful.

When installation is completed, before the crew leaves the site:

Make sure the set communicates well – wait at the site and verify new samples from all 3 sensors are being received and shown on website every 5 minutes.

7.6 Installing the sensors on the wire using a hot stick

7.6.1 Each sensor in the set has a label indicating the electric phase that it should be installed on: A, B or C. The arrow next to the phase label indicates the direction of the power flow:

Figure 19: Phase and power flow arrow labels

7.6.2 Loosen the main clamp screw and the secondary clamp screw of the sensor, enough to fit onto the cable.

7.6.3 Open the hook of the grip-all hot stick, hook the ring of the main clamp screw, pull back the handle of the hot stick until the cross pin on the main clamp screw is fixed in the edge of the hot stick:

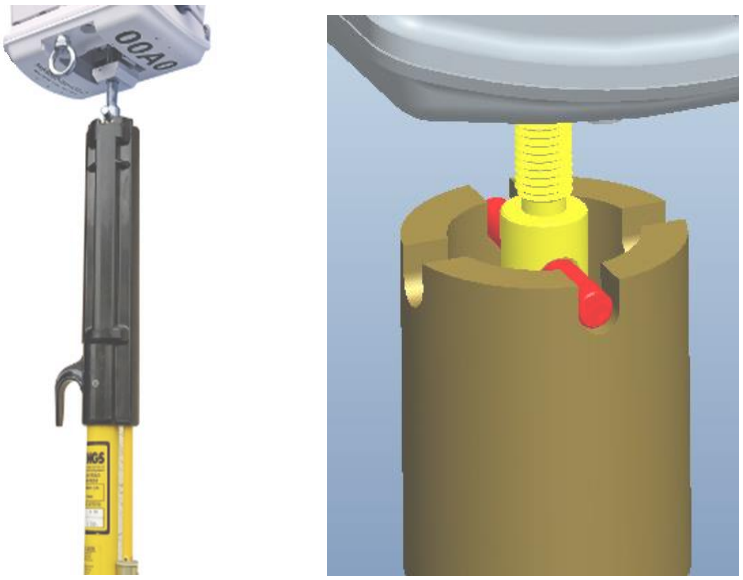

Figure 20: Gripping the main screw using hot stick

7.6.4 Place the sensor on the wire. (See Figure 15)

Location of the sensors and distance from the pole:

a) The sensors are usually deployed on the wires near the electric pole.

b) It is recommended that the distance from the pole will be between 1.5m to 3m

c) There is an advantage to locate the sensors 3m from the pole (rather than closer) because the electric field near the pole changes when it is raining or when there is a moisture on the pole. This is especially evident for concrete poles. In such cases of proximity to the pole will increase the fluctuation of the voltage measurements in raining times. However, the quality of fault detection is not being impaired in any case.

7.6.5 Close and firmly fasten the main clamp screw by rotating the hot stick by hand (See Figure 16). The main clamp screw attaches the unit onto the wire.

Figure 21: Placing the sensor on the wire

Figure 22: Fastening the main clamp screw

7.6.6 Disconnect the hot stick from the main screw. At this stage the sensor is attached to the wire, but it is still open:

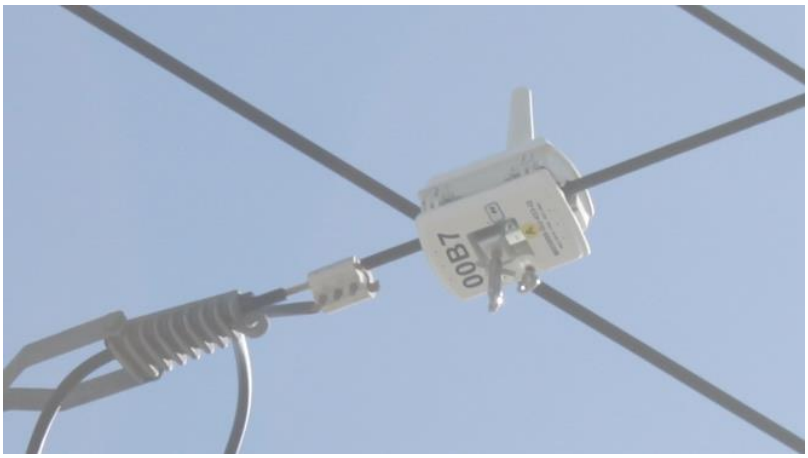

Figure 23: Sensor attached to wire but still open

7.6.7 Grip the ring of the secondary clamp screw. Pull back the handle of the grip all hot stick gently – the hook should not be pulled back all the way in order to allow flexibility.

7.6.8 Rotate the secondary clamp screw and push it upwards. Fasten it firmly.

Figure 24: Fasten the secondary clamp screw

Tightening well both the main screw and the secondary screw is very important in order to ensure that the sensor will work properly.

Do not apply a moment of force (torque) above the specified limit.

Torque requirements:

Main clamp screw	1.4 kg-m Typical, 1.9 kg-m Max
Secondary clamp screw	0.9 kg-m Typical, 1.3 kg-m Max

Note: Exact torque measurement in the field is not required, it is sufficient to close the screws firmly using the hotstick and apply more force to the main screw.

7.6.9 Disconnect the hot stick from the secondary screw. At this stage the sensor is mounted and closed.

Repeat for all units in the set, a sensor on each phase according to unit's phase label.

7.7 Direct Installation on the wire (without hot stick)

7.7.1 The sensors can be installed on the live line using insulated glove and insulated aerial platform:

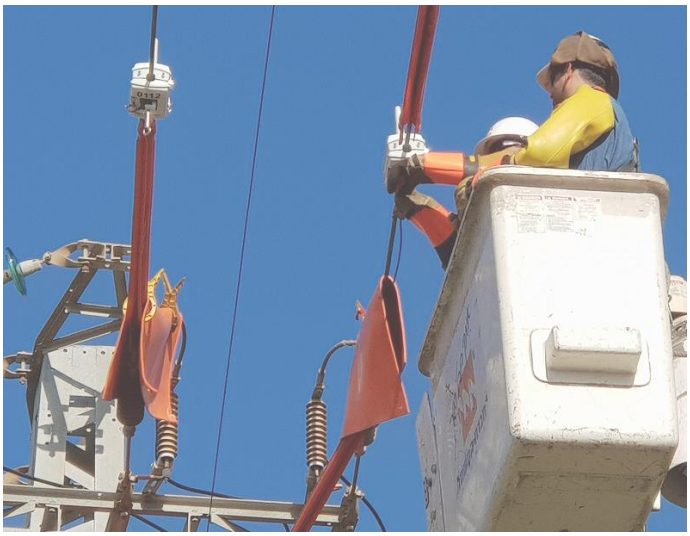

Figure 25: Direct Installation on a live line using insulated gloves and insulated aerial platform

7.7.2 Alternatively, the sensors can be deployed on a non-energized line:

Figure 26: Direct installation on a non-energized line

Please tighten well both the main clamp screw and the secondary clamp screw according to the specification in the previous section.

7.8 Installation steps summary

Installing MS5000 GS Set on transmission line - Summary	Picture
1. Take a GS and 2 SUs, which have been paired together as a set. Make sure unit properties fits the wire material.	
2. Open the set units at 45 degrees angle. Push the Power button to turn them on.	
3. Verify set RF and Cellular connection at the site**:** Each unit should show indication of 3 Led blinks every 5 seconds	
For each sensor: 4. Loosen the main clamp screw and the secondary clamp screw of the sensor, enough to fit onto the cable.	
5. Place sensor on the wire using a hot stick or direct installation by hand. Make sure the sensor is placed according to phase label and direction.	
6. Tighten the secondary clamp screw and then the main clamp screw firmly.	
7. Verify set RF and Cellular connection again, when set is on the line: - Each unit should show indication of 3 Led blinks every 5 seconds - A new measurement from all 3 sensors should be received and shown on website, every 5 minutes.	

In order to make sure the system is running properly, please verify the following points during installation:

Verifying that the sensors are installed correctly:

	Action	Installation phase /Sensor's Location
1.	**GS and Sensors' battery level - initial LED indication**: When turning on a sensor, it is recommended to verify that there are 2 or 3 short blinks indicating that the battery level is sufficient. If there is only a single blink, it means that the battery is low and there is a risk of communications issues until it will be charged from the current in the line.	On the ground
2.	**RF and server connection:** Short time after turning on the sensors on, the LEDs of the three sensors should blink 3 times every 5 seconds to indicate full radio and server connection.	On the ground
3.	**Reception level of GS**'s cellular modem to can be verified using RC-Tool. The reception level should be between -80 and 0 dBm for a good cellular connection.	On the ground, near the pole
4.	**The measurements will be shown on MetryView each 5 minutes**.	On the line
5.	If the line is energized during installation, the surrounding LEDs (four side LEDs of the sensor) will provide an indication when the sensor is deployed.	On the line

Checklist: Verifying that the sensors are installed correctly

7.9 Installation of MS5200

MS5200 is installed using the same Standard Grip-All “Shotgun” hot stick as MS5000. When performing an installation on a live line the grounding hook accessory must be used. The grounding hook accessory should be inserted to the M10 thread in the bottom of the MS5200 and well fastened:

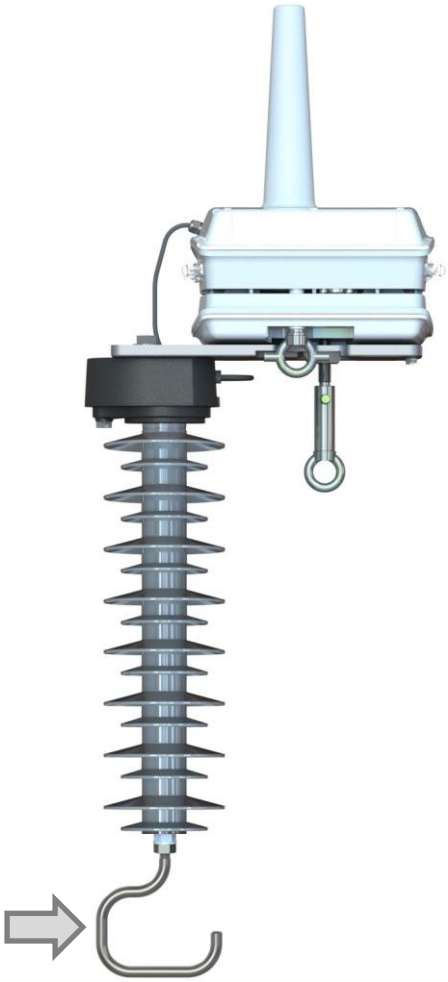

Figure 27: Grounding hook accessory connected to the MS5200

In addition, a standard medium voltage grounding clamp with a ground wire must be used, e.g. see this example:

Figure 28: An example of a grounding clamp and a ground wire

These are the stages of the installation of MS5200:

1. Install the MS5200 sensor on the wire using a hot stick according to the insulation steps described for MS5000.
2. Connect the wire of the grounding clamp to the earthing point on the pole.
3. Connect the grounding clamp to grounding hook using the hot stick. The grounding clamp will remain connected permanently.

All stages must be done using a hot stick with a safe distance, and in particular it is forbidden to touch or be in proximity to any part of the product or the grounding wire when performing a live line installation.

MS5000 and MS5200 are installed on medium-voltage lines and the installation must be done only by professional workers who were qualified by the power utility to perform such procedures. This installation guide provides general information, but it is not providing a detailed procedure, and the installation must comply to the internal procedures and safety rules of the power utility.

7.10 Installation examples:

Figure 29: Sensor installed on each phase

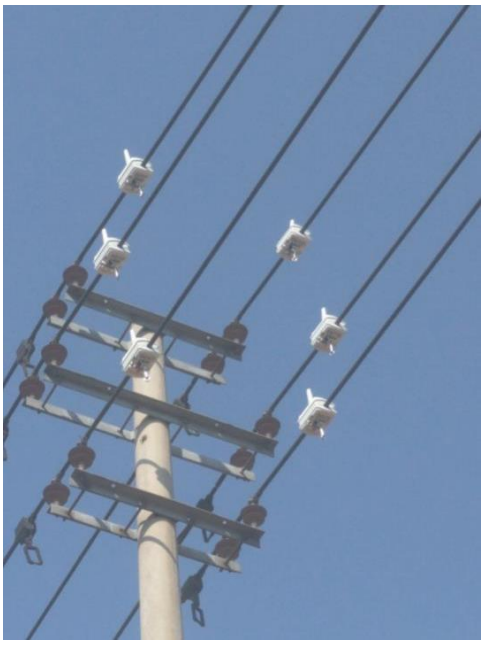

Figure 30: Example of installation on two circuits

Figure 31: Lifting the equipment using a climbing equipment and a rope

Figure 32: Installation by hot stick (fastening the secondary clamp screw)

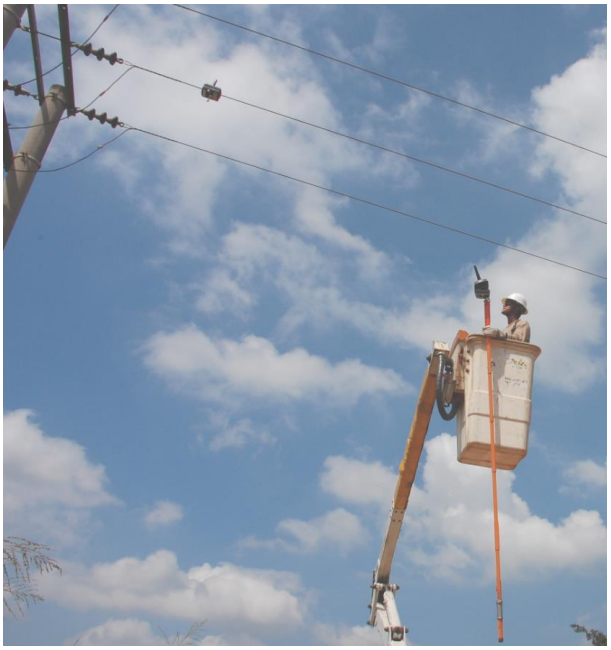

Figure 33: Lifting the equipment using a Crane

Figure 34: Installation by hot stick using a crane

7.11 Data captured during the installation

Please fill-in the following table during the installation:

Logical Point name	Date and time of installation	Set Label	Location	IEEE MAC address of GS or Sensor (last 4 digits)			Coordinates	
will be displayed on the MetryView Diagram - Can be filledin after		If the sets include a labels that were prepared in advance	Tower number and description	Phase A	Phase B	Phase C	Latitude	Longitude
Point 10	1.1.2020, 13:40	Set – 81C2	Tower 412 on Branch	81C2	81C5	82BA	-19.8010°	40.810°
Point 11	1.1.2020, 14:00	Set – 81A3	Tower 417	81A3	8ED5	8213	-19.8080°	40.8050°
Point 12	1.1.2020, 14:22	Set – 8EA2	Tower 421	8EA2	8A45	80BA	-19.8090°	40.8930°
Point 13	1.1.2020, 14:44	Set – 87B2	Tower 427	87B2	8115	81B0	-19.8110°	40.8120°

Example of data table filled in during installation

After installation please provide the table to Megger for configuring the MetryView website (this can also be done in advance before the installation if the installation plan is known)

It is recommended to take high-resolution pictures of the sensors immediately after installation. This can later help to analyze possible installation problems (e.g. wrong physical installation, swapping of sensors between phases or locations, etc.)

The transmission power of the radio should be set according to the limitation of local regulation

7.12 Troubleshooting of sensor problems in ongoing operation

The following indications can be used to recognize that there is a problem in the functionality of a sensor or in its communications:

- Low battery level alarms even when the average load current is sufficient (above 3A). The alarms are shown as a red dot near the sensor on the diagram in MetryView and in DNP3 datapoints.
- Low power-mode alarm in these conditions (in MetryView and DNP3).
- “Loading from backup” alarm in these conditions (in MetryView and DNP3).
- Unexpected voltage imbalance alarm for long period of time may indicate that a sensor measures the voltage incorrectly (in MetryView and DNP3).
- Communication problem alarm to the DMS indicating missing periodic measurements (in DNP3). This can be troubleshooted by reading the radio reception level (RSSI) and checking if it is not too low.

Manufacturing sites

Megger Limited
Archcliffe Road
Dover
Kent CT17
9EN
ENGLAND
T. +44 (0)1 304 502101
F. +44 (0)1 304 207342

Megger GmbHWeststraße
59
52074
Aachen
Germany
T. +49 (0) 241 91380 500
E. info@megger.de

Megger USA - Valley Forge Valley
Forge Corporate Center2621 Van
Buren Avenue Norristown
Pennsylvania, 19403USA
T. 1-610 676 8500
F. 1-610-676-8610

Megger USA - Dallas 4545
West Davis StreetDallas
75211-3422
T. +1 214 333 3201
F. +1 214 331 7399
USsales@megger.com

Megger AB
Rinkebyvägen 19, Box 724,
SE-182 17
DANDERYD
T. 08 510 195 00
E. seinfo@megger.com

Megger Baker
4812 McMurry Avenue
80525
USA
T. +1 970-282-1200
E. baker.sales@megger.com

The company reserves the right to change the specification or design without prior notice.

Megger is a registered trademark

The Bluetooth® word mark and logos are registered trademarks owned by Bluetooth SIG,Inc and is used under license.

Part No: MetrySense 5000 - Installation Guide - v2.14