WARRANTY/REPAIR POLICY

Your Lyman product has been produced under rigid standards of manufacture and inspection. However, if your Lyman product is found to be defective in material or workmanship within one year of delivery to the first retail purchaser, we will repair or replace it without charge.

If you require service under this warranty, please return the complete item along with a letter of explanation, including your complete name and address, freight prepaid to the factory at the address listed below. Your Lyman product will be repaired or replaced and returned to you within 30 days of our receipt. In making any return of a Lyman product to the factory, please be sure it is packaged with proper care to protect it from damage in transit.

We are sorry, but our warranty cannot apply to a defect which results from misuse, abuse, neglect, accident or improper care, or if your Lyman product has been altered or repaired by anyone other than factory personnel.

If the item is out of warranty and is in need of repairs, the Lyman product should also be returned to the same address listed below. Appropriate charges will apply for parts and labor. Estimates are available only when the item has been thoroughly inspected by our repair personnel.

Lyman Products Corporation
475 Smith Street, Middletown, CT 06457
Attn: Service Department

Lyman®

475 Smith Street
Middletown, CT 06457

860-632-2020

www.lymanproducts.com

Lyman®

Auto Advance Remote Controlled Target System

Instruction Guide

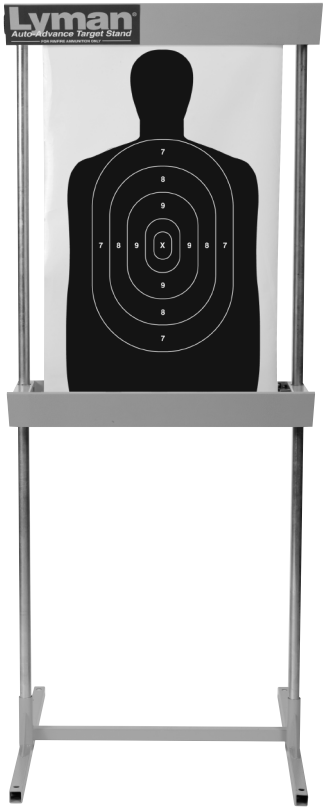

Auto Advance Remote Target System

The new Lyman Auto-Advance Remote Target System is a revolutionary design, offering the advantage of remote target advancement previously only found in expensive industrial systems. The Auto-Advance Remote Target System will advance your targets with the use of a hand-held remote controller at distances of up to 200 yards. No more walking downrange to replace targets, or waiting for a cease-fire to be called. Advance to the next target without getting up from your shooting bench! The Auto-Advance system is battery operated, so there is no need for access to power outlets, plus it disassembles easily for transportation back and forth to the range. The Auto-Advance system has protection plates that are rated for use with all rimfire calibers. The legs of the stand use standard and inexpensive electrical conduit tubing available at any home center. This makes replacing damaged legs simple and also allows for customizing target heights to suit your particular needs. The Auto-Advance System comes with a roll of standard bullseye targets. Additional 50 foot target rolls are available with bullseye, small bore rifle, animal and silhouette designs.

Warnings

- The Auto-Advance System is rated for use with rimfire calibers only. The use of centerfire caliber firearms will void the warranty.
- Use only on ranges and areas where you are sure of having a safe backstop and that any ricochets will be deflected in a safe manner.
- Follow all safe firearm handling procedures.
- Keep firearms unloaded and pointing in a safe direction when anyone is downrange.
- For adult use only. Children should be properly supervised by adults if using this product.
- Be sure to follow any and all range rules regarding target stands.

Specifications

- Overall dimensions: 24” wide x 29” deep x 60” tall (variable)
- Weight: 30lbs
- Target Roll: 18” wide x 50’ long
- Remote system: 433.87MHz, 200 Yard capability
- FCC ID: 2AG7Y-4320071
- Battery requirement: Transmitter: 9V / Receiver: 8 x AA

A TARGET ROLL, 50FT LONG

BULLSEYE (INCLUDED) 4320075

SMALL BORE RIFLE (OPTIONAL) 4320076

SILHOUETTE (OPTIONAL) 4320077

VARMINT (OPTIONAL) 4320078

B FIXED ROLLER STUD ASSEMBLY 4320101

C ROLLER STUD ASSEMBLY 4320102

D LOCKING LEVER 4320103

E UPPER STEEL PLATE 4320104

F WING NUT, EACH (6 REQ'D) 4320105

G CRANK HANDLE 4320106

H LEGS, SET OF 4, 29" 4320107

I LOWER ASSEMBLY WITH MOTOR 4320108
AND RECEIVER (INCLUDES NEW REMOTE)

J REMOTE (CONTACT LYMAN WITH UNIT SERIAL NUMBER) 4320109

K CROSS BAR 4320110

L FOOT, EACH (2 REQ'D) 4320111

M LANDSCAPE SPIKE, SET OF 4 4320112

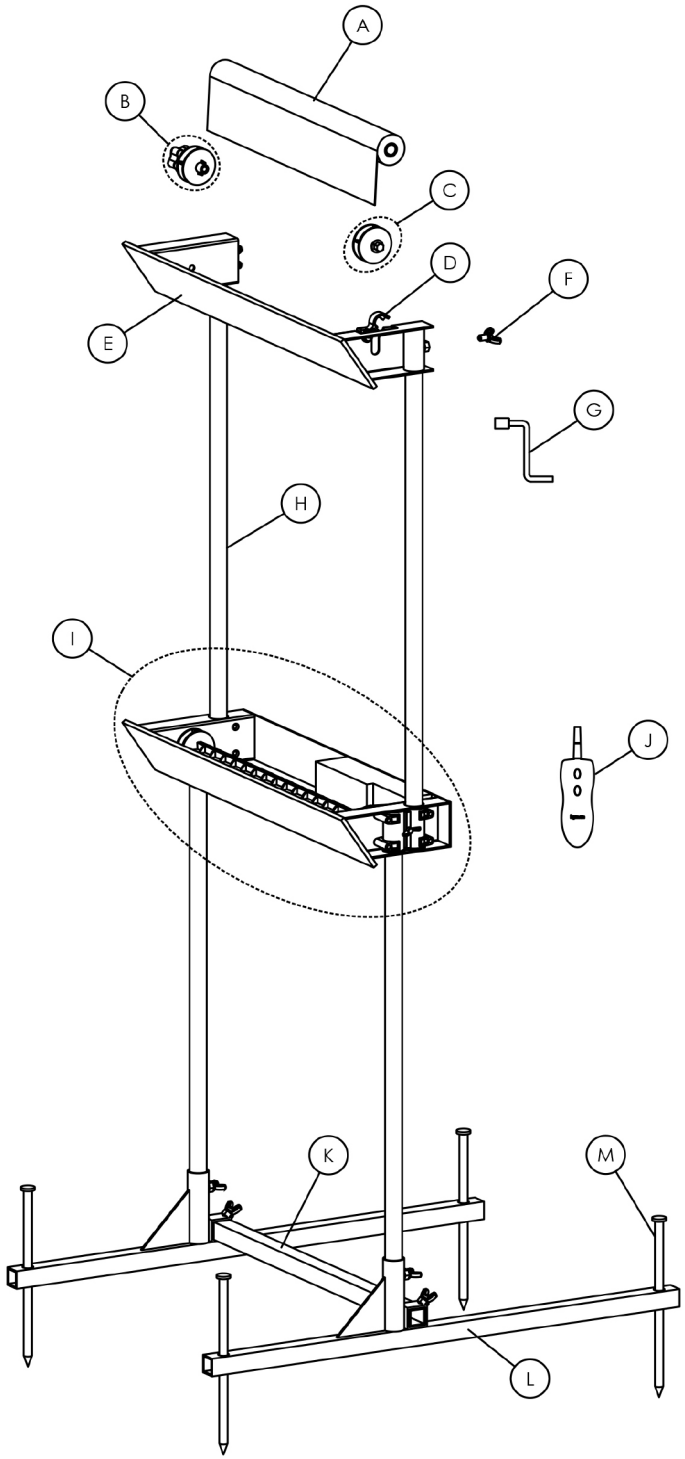

Assembly

- Insert the square tube cross bar into the horizontal openings in each side of the feet and tighten securely with the wing nuts. (See Fig.1)
- Place two of the supplied tubes into the round openings in the feet and tighten securely with the wing nuts.

Fig.1

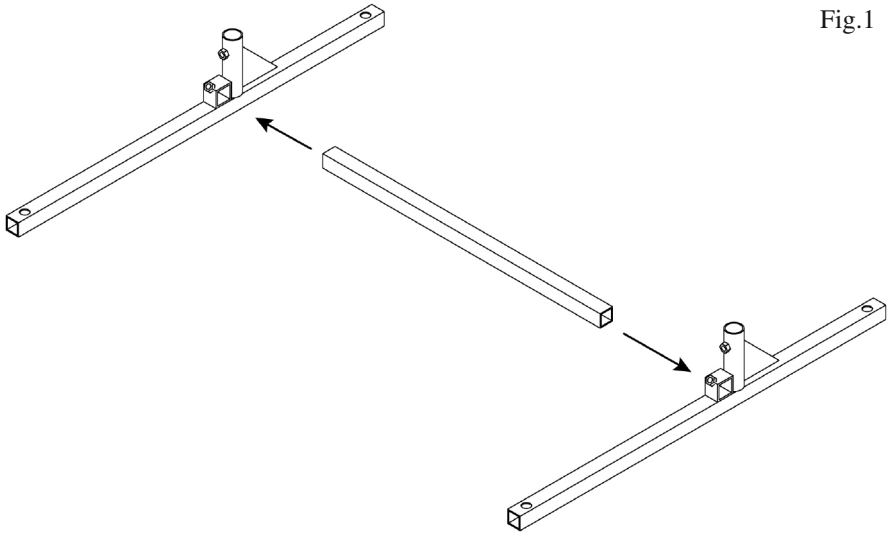

Fig.2

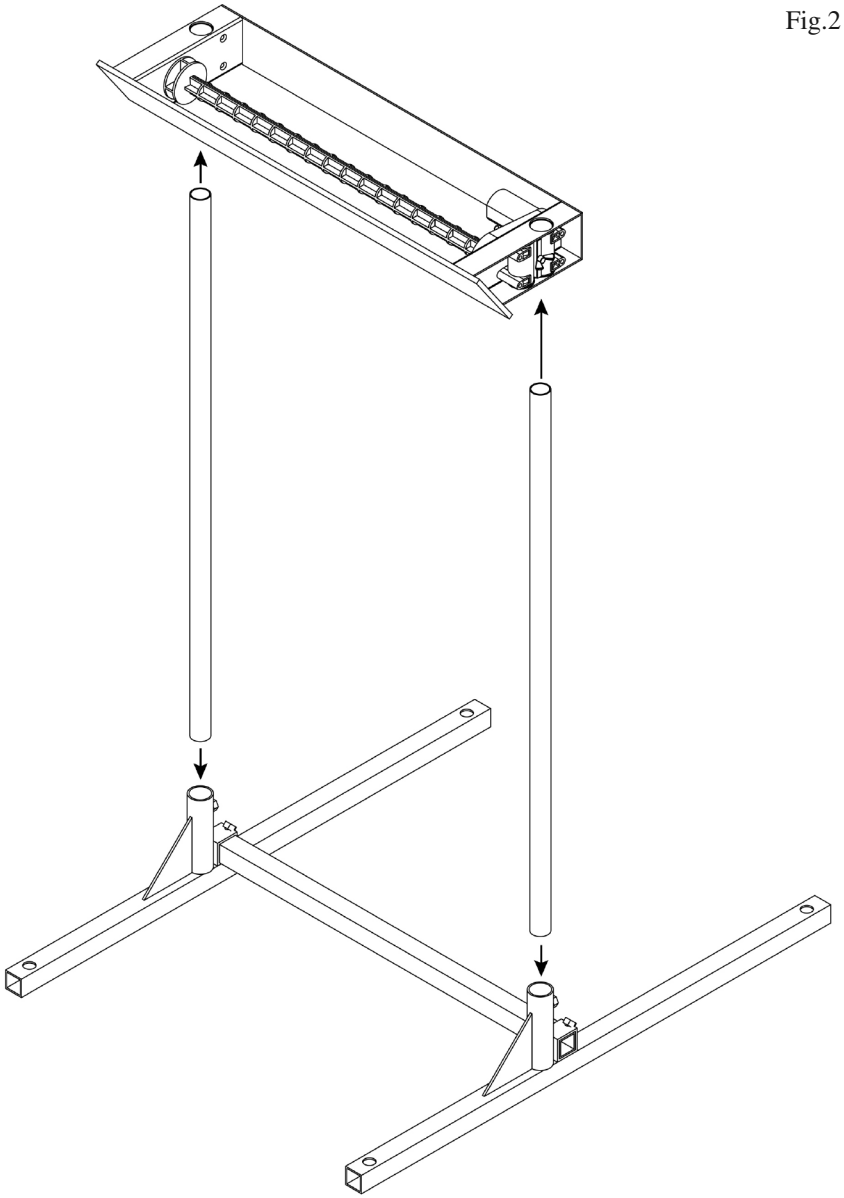

- Slide the motor assembly onto the two tubes so that the angled deflector plate faces forward and is positioned to deflect hits downward. Note that the wing nuts on the sides of the motor assembly may need to be loosened to accept the tubes. (See Fig.2)
- Slide the remaining two tubes into the openings on the top surfaces of the motor assembly.
- Tighten the wing nuts on the sides of the motor assembly securely.

29” long, which is an optimal length; although you can cut the tubing to whatever length best suits your needs. We recommend using approximately 29” long legs for the upper section. The lower legs can be varied up or down approximately 1 foot as needed. Keep in mind the height of the backstop or retaining wall that the Auto-Advance System may be placed in front of when selecting the height of the legs.

Replacement Target Rolls Available

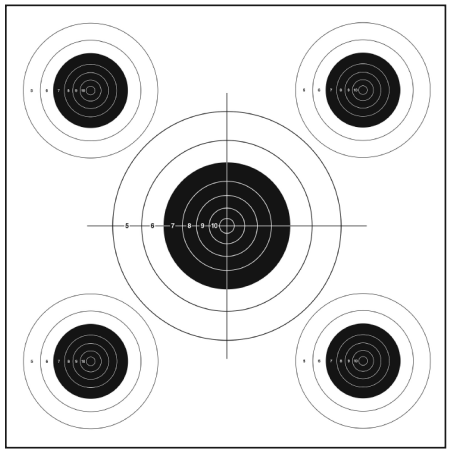

Bullseye Target Roll
Item #4320075

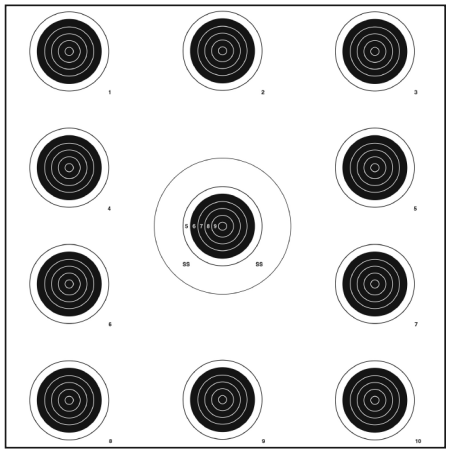

Small Bore Rifle Target Roll
Item #4320076

Silhouette Target Roll
Item #4320077

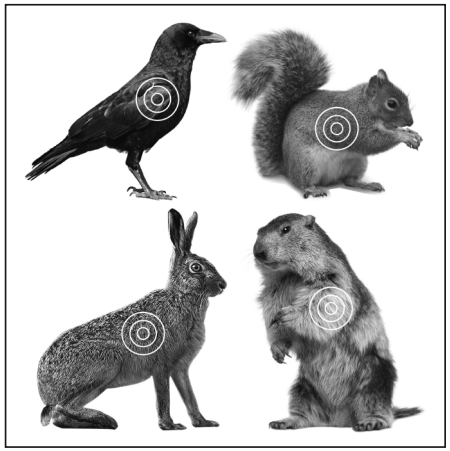

Varmint Target Roll
Item #4320078

Operation

- Turn power switch to the ON position on the motor assembly and pull out the antenna to its full length.
- Turn on the power to the remote with the switch on the side of the remote. Press the upper button on the remote to begin advancing the target. Press the lower button to stop the target from advancing. Line up a target in the center of the opening.
- The target should be fairly taut so that it does not move excessively in the wind. The tension on the target roll can be adjusted with the knob on the left hand side of the upper target roller assembly. Loosen the outer knob, then adjust inner knob clockwise to add tension and counter-clockwise to decrease the amount of tension. Apply just enough tension to keep the target taut. Too much tension will needlessly overwork the motor. Tighten outer knob once adjustment is complete. (See Fig.9)
- Place the target stand down range as you would any other target stand. Follow all of your local range rules regarding target stands. To secure the stand once in place, four large landscape spikes are provided. Drive them through the holes in the legs by hand or with a mallet. This will keep the stand stable in moderate wind or if the frame is accidentally shot. In the case of concrete, asphalt or frozen ground, sand bags or bags of lead shot could be used to provide stability.
- After a target is used up, use the remote from your shooting location to advance to a fresh one. Use the top button on the remote to begin advancing and once a new target is lined up in the opening press the bottom button to stop it. The use of a spotting scope or your rifle scope may be necessary at longer ranges.
- A crank handle is supplied with the Auto-Advance system that will allow the targets to be rolled back onto the upper roll. This is used to rewind the targets back onto the upper roll so that they can be reviewed. First disengage the motor from the spindle by pulling out the knob and turning as described above, then place the crank handle on the hex bolt on the right hand side of the upper target roller assembly. Crank the handle clockwise to rewind the targets.

Changing Target Rolls

When a roll of targets is used up, it will need to be rewound back onto the upper roll. Disengage the motor from the spindle by pulling out the knob and turning, then rewind the spent roll completely with the crank handle. (Tip: a cordless drill on low speed with a 10mm socket could be used to speed up rewinding) After rewinding the roll, rotate the locking cam on the right hand side of the upper target roller assembly up and forwards. Lift the right hand side of the target roll up and out of the slot and pull the other end of the target roll off of the left hand side stud. Replace the roll with a new one following the assembly instructions.

Changing/Replacing Legs

Inevitably the legs on your unit will sustain accidental shots or damage. Because of this, standard ¾” EMT Electrical Conduit tubing is used for the legs of the Auto-Advance System. Contact Lyman or visit the Lyman website at www.lymanproducts.com to purchase replacement legs, or this inexpensive tubing can be found at most hardware stores or home centers. Factory legs are

Fig.3

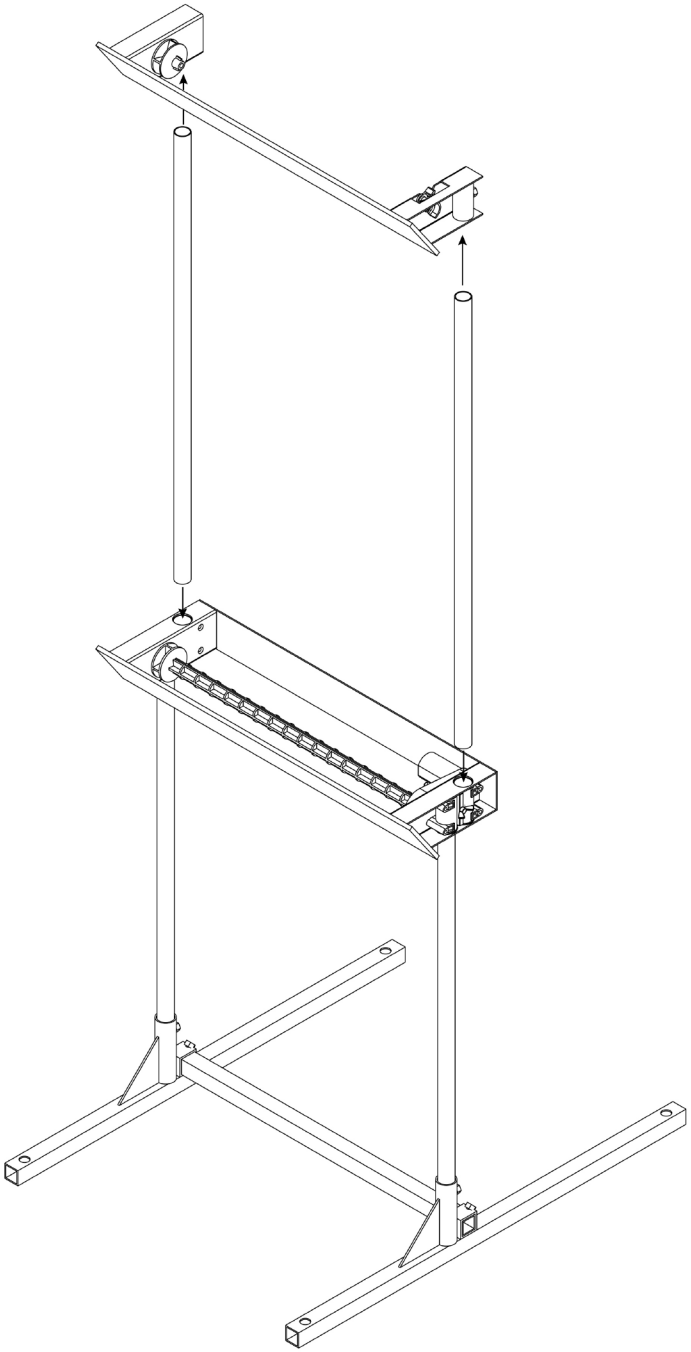

- Slide the upper target roller assembly onto the top of the two tubes so that the angled deflector plate faces forward and is positioned to deflect hits downward.
- Tighten the wing nuts on the back side of the upper assembly securely. (See Fig.3)

- Rotate the locking lever on the right hand side of the upper target roller assembly up and forwards. (See Fig.4)
- Place a target roll onto the roller stud on the left hand side of the upper assembly. Note that there are two ridges on the stud that need to line up with two slots in the center tube of the target roll. The target roll should be positioned so that the target unrolls facing the shooter.
- Place the other roller stud onto the opposite end of the target roll and fit it into the two slots.
- Slide the roller stud into the slot in the top of the upper target roller assembly so that the headed hex bolt is just behind the side wall of the assembly. (See Fig.5)

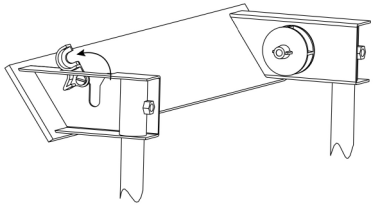

Fig.4

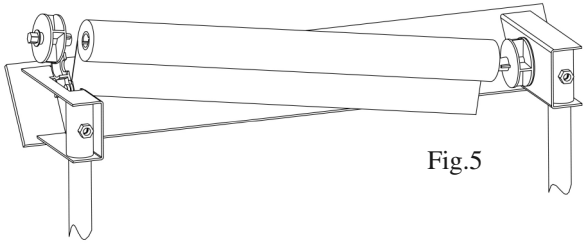

Fig.5

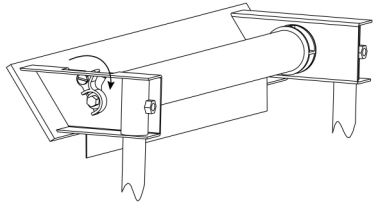

Fig.6

- Rotate the locking lever back down over the head of the hex bolt. (See Fig.6)
- Pull out knob and turn to disengage the motor from the spindle. This allows the lower spindle to freewheel. (See Fig.7)
- Pull the target material downwards to the lower spindle and slip the end of it into the slot in the center. Allow for about an inch of target to protrude through the bottom of the spindle.(See Fig.8)
- Start rolling of target material onto lower spindle by rotating a few revolutions by hand.
- Engage the motor by turning the knob back into position so that it drops down into the two notches.
- 8 AA batteries are required for the target stand. The battery compartment is located in the motor enclosure. Remove thumb screw and open compartment to install batteries.
- One 9V battery is required for the remote. Remove cover on back side and install.

Fig.8

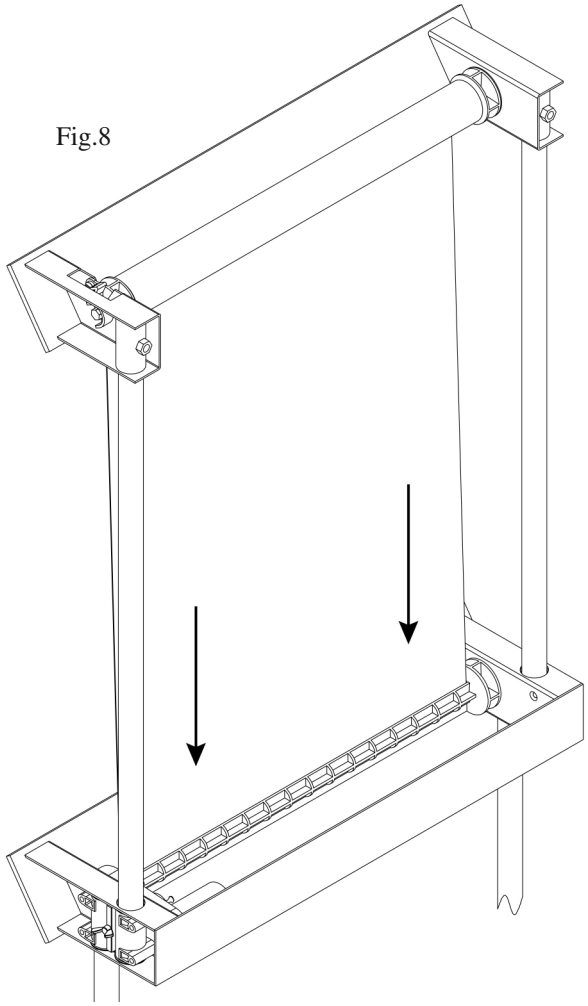

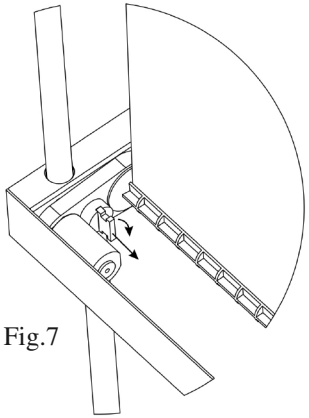

Fig.7

Fig.9

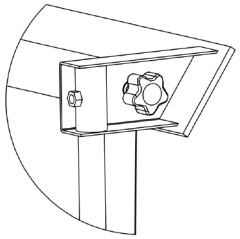

This equipment has been tested and found to comply with the limits for a Class B digital device, pursuant to part 15 of the FCC Rules. These limits are designed to provide reasonable protection against harmful interference in a residential installation. This equipment generates, uses and can radiate radio frequency energy and, if not installed and used in accordance with the instructions, may cause harmful interference to radio communications. However, there is no guarantee that interference will not occur in a particular installation. If this equipment does cause harmful interference to radio or television reception, which can be determined by turning the equipment off and on, the user is encouraged to try to correct the interference by one or more of the following measures:

- Reorient or relocate the receiving antenna.
- Increase the separation between the equipment and receiver.
- Connect the equipment into an outlet on a circuit different from that to which the receiver is connected.
- Consult the dealer or an experienced radio/TV technician for help.

Caution: Any changes or modifications to this device not explicitly approved by manufacturer could void your authority to operate this equipment.

This device complies with part 15 of the FCC Rules. Operation is subject to the following two conditions: (1) This device may not cause harmful interference, and (2) this device must accept any interference received, including interference that may cause undesired operation.