DLM200

2.4/5 GHz 2x2 MIMO Wi-Fi® 11n Module

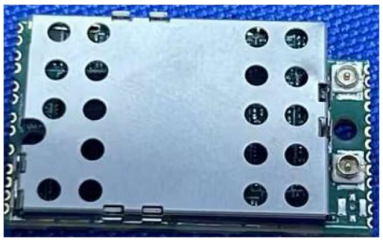

Features

- Qualcomm-Atheros AR9590-AR1B Chipset with Extended Temperature Range
- Up to 300 Mbps Throughput with 2x2 MIMO Technology
- Supported Ath9k Linux Driver
- PCIE Interface (via SMD pins)

© 2023 Doodle Labs. All rights reserved.

TECHNICAL SPECIFICATIONS	
Model No.	DLM200
MAC Chipset	Qualcomm Atheros QCA9590-AR1B with Extended Temperature range
Software Support	Linux Drivers ath9k
Center Frequency Range	5.180 GHz ~ 5.825 GHz 2.412 GHz ~ 2.484 GHz This varies by the regulatory domain
Channel Bandwidth*	20, 40 MHz channels
Radio Modulation (Dynamic Link Adaptation)	CCK, BPSK, QPSK, 16 QAM, and 64 QAM (2.4 GHz – 11n models) BPSK, QPSK, 16 QAM, and 64 QAM (5.x GHz – 11n models) CCK, BPSK, QPSK, 16 QAM, and 64 QAM (2.4 GHz – 11n models)
Data Rates Supported	802.11a: 6, 9, 12, 18, 24, 36, 48 and 54 Mbps (5.x GHz) 802.11n: MCS0-15 (5.x and 2.4 GHz) 802.11b/g: 1, 2, 5.5, 6, 9, 11, 12, 18, 24, 36, 48 and 54 Mbps (2.4 GHz)
802.11n version 2.0 Capabilities	• Packet aggregation: A-MPDU (Tx/Rx), A-MSDU (Tx/Rx), Maximal ratio combining (MRC), Cyclic shift diversity (CSD), Frame aggregation, block ACK, 802.11e compatible bursting, Spatial multiplexing, cyclic-delay diversity (CDD), low-density parity check (LDPC), Space Time Block Code (STBC) • Phy data rates up to 450 Mbps (40 MHz channel)
Operating Modes	AP, STA and Adhoc modes to implement Point to Point, Point to multi Point
MAC Protocol	TDD with Carrier Sense Multiple Access with Collision Avoidance (CSMA/CA)
Wireless Error Correction	FEC, ARQ
Wireless Data Security	128 bit AES, WEP, TKIP and WAPI hardware encryption. Support for IEEE 802.11d, e, h, i, k, r, v, w and time stamp standards
FIPS Certification	Loop back mode to facilitate FIPS AES certification, Small packet size (96 bytes) in AES encryption at full packet rate

Tx/Rx Specification	Radio Modulation	Coding Rate	Rx Sensitivity (Typ)	
5 GHz (20 MHz Channel)				
802.11a, STBC	BPSK	1/2	-96	
802.11a, STBC	64 QAM	3/4	-81	
MIMO	BPSK	1/2	-94	
MIMO	16 QAM	3/4	-83	
MIMO	64 QAM	5/6	-72	
5 GHz (40 MHz Channel)				
MIMO	BPSK	1/2	-91	
MIMO	16 QAM	3/4	-79	
MIMO	64 QAM	5/6	-69	

© 2023 Doodle Labs. All rights reserved.

2.4 GHz (20 MHz Channel)				
802.11b, STBC	1 Mbps	CCK	-100	
802.11g, STBC	64 QAM	3/4	-80	
802.11n, MIMO	BPSK	1/2	-92	
802.11n, MIMO	16 QAM	3/4	-82	
802.11n, MIMO	64 QAM	5/6	-72	
2.4 GHz (40 MHz Channel)				
802.11n, MIMO	BPSK	1/2	-90	
802.11n, MIMO	16 QAM	3/4	-79	
802.11n, MIMO	64 QAM	5/6	-70	

Note 1 It is advantageous to use the smallest Channel Bandwidth that can support the Throughput requirements. Smaller bandwidths provide more channels to choose and help avoid interference issues. The system's SNR is higher at smaller Channel Bandwidths and Range is longer.

Note 2 Max allowed Tx power depends on the regulatory domain

Antenna Signal Strength	-35 to -85 dBm (Recommended), Absolute Maximum=+12 dBm
Integrated Antenna Port Protection	>20 KV (Human Body Model)
Receiver LNA Gain	>10 dB
Receiver Adjacent Channel Rejection (ACR)	>18 dB @ 11a, 6 Mbps (Typ)
Receiver Alternate Channel Rejection (ALCR)	>35 dB @ 11a, 6 Mbps (Typ)
Receive chain Noise Figure	+6 dB
Transmitter Adjacent Channel Leakage power Ratio (ACLR)	45 dB (Fc ± ChBW)
Transmitter Spurious Emission Suppression	-40 dBc
RF Power control	In 0.5 dBm steps. Accuracy of power calibration loop ±2 dBm. Each transceiver individually calibrated and tested.
Control for External Power Amp	Available as an optional configuration
PHYSICAL, ENVIRONMENTAL AND OTHER SPECIFICATIONS	
Antenna Ports	2 Ports (50 Ohms) with u.FL connectors.
Host Interface (SMD)	PCIe Interface
Host CPU Board	Host board with CPU supporting Industry standard PCI-Express interface (via SMD pins)
Operating Voltage	3.3 Volts
Power Consumption	2W @ 20 dBm power, in continuous data transfer mode on all chains 0.7W in continuous data receive mode 230 mW in Sleep mode
Shield case temperature range (Operating)	-40°C to +85°C The System's thermal design should ensure that the transceiver's case temperature is maintained within these specifications.

© 2023 Doodle Labs. All rights reserved.

Humidity (Operating)	0% – 95% (Non-condensing)
Dimensions	32 x 20 x 3 mm, 5 grams
Regulatory Requirements	Designed and Verified to meet various regulatory requirements. Formal testing and approval is required based on the Integrator's particular host platform and antenna type. The Integrator is also responsible for obtaining all required regulatory approvals in target markets for the finished product.
FCC ID	In Progress
CE/ETSI	In Progress
Industry Canada (IC)	In Progress
RoHS/WEEE Compliance	Yes. 100% Recyclable/Biodegradable packaging

System Integration

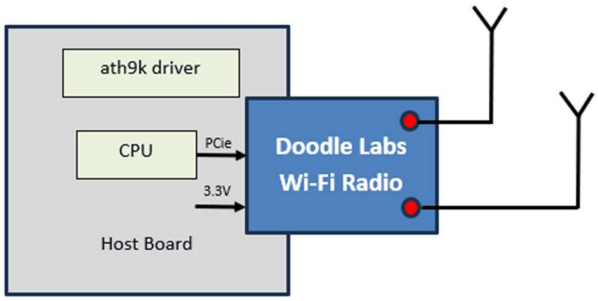

As shown in the block diagram, the modular nature of the MIMO radio module allow for accelerated development of the wireless modem. An embedded CPU with standard PCIe interface is required. Visit Doodle Labs Technical Library for extensive design-in documents.

Usage Instructions under Modular Approval:

Host Board Top Layer Instructions:

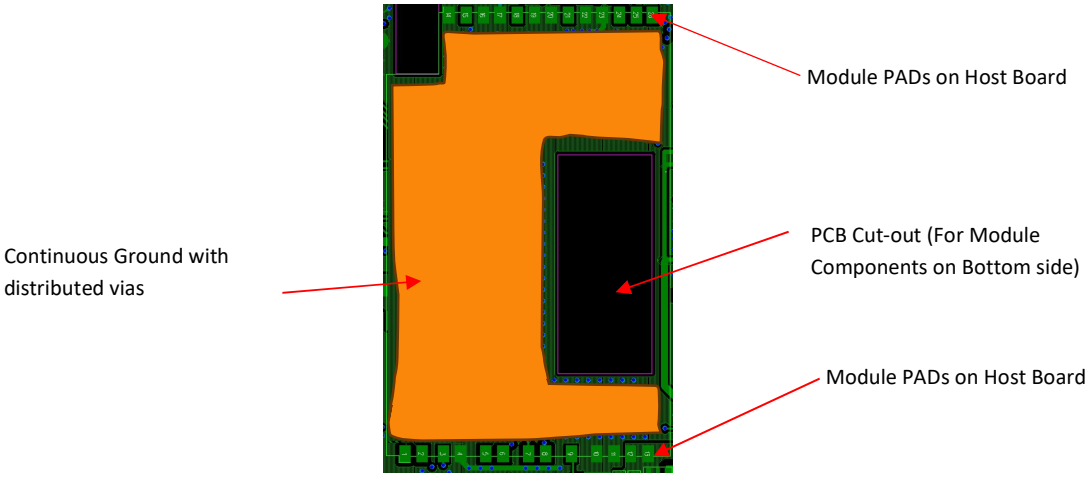

The top layer (underneath the module) of the host PCB must be ground with as many GND vias as possible.

© 2023 Doodle Labs. All rights reserved.

FCC Regulatory Statement:

This device complies with part 15 of the FCC rules. Operation is subject to the following two conditions: (1) this device may not cause harmful interference, and (2) this device must accept any interference received, including interference that may cause undesired operation. Changes or modifications not expressly approved by the party responsible for compliance could void the user' s authority to operate the equipment.

Important Note:
Radiation Exposure Statement
This equipment complies with FCC radiation exposure limits set forth for an uncontrolled environment. This equipment should be installed and operated with minimum distance 20cm between the radiator and your body.
This transmitter must not be co-located or operating in conjunction with any other antenna or transmitter. Country Code selection feature to be disabled for products marketed to the US/Canada .
This device is intended only for OEM integrators under the following conditions:
1.The antenna must be installed such that 20cm is maintained between the antenna and users, and
2.The transmitter module may not be co-located with any other transmitter or antenna,
Important Note:
In the event that these conditions cannot be met (for example certain laptop configurations or co-location with another transmitter), then the FCC authorization is no longer considered valid and the FCC ID cannot be used on the final product. In these circumstances, the OEM integrator will be responsible for re-evaluating the end product (including the transmitter) and obtaining a separate FCC authorization.

End Product Labeling
The final end product must be labeled in a visible area with the following" Contains FCC ID: 2AG87DLM200"

Manual Information to the End User
The OEM integrator has to be aware not to provide information to the end user regarding how to install or remove this RF module in the user's manual of the end product which integrates this module. The end user manual shall include all required regulatory information/warning as show in this manual

Integration instructions for host product manufacturers according to KDB 996369 D03 OEM Manual v01.

2.2 List of applicable FCC rules
CFR 47FCC PART15 SUBPART C & E has been investigated. It is applicable to the modular transmitter

2.3 Specific operational use conditions
This module is stand-alone modular. If the end product will involve the Multiple simultaneously transmitting condition or different operational conditions for a stand-alone modular transmitter in a host, host manufacturer have to consult with module manufacturer for the installation method in end system.

2.4 Limited module procedures
Not applicable

© 2023 Doodle Labs. All rights reserved.

2.5 Trace antenna designs

Not applicable

2.6 RF exposure considerations

This equipment complies with FCC radiation exposure limits set forth for an uncontrolled environment. This equipment should be installed and operated with minimum distance 20cm between the radiator & your body.

2.7 Antennas

This radio transmitter FCC ID: 2AG87DLM200 has been approved by Federal Communications Commission to operate with the antenna types listed below, with the maximum permissible gain indicated. Antenna types not included in this list that have a gain greater than the maximum gain indicated for any type listed are strictly prohibited for use with this device.

Model No.	Manufacturer	Type of Antenna and Gain (Max.)	Frequency range
ANT-HID-DB	Doodle Labs	SMD Antenna 0 (on PCB) 2.0dBi (Max.) 2.4dBi (Max) 3.2dBi (Max)	2412 ~ 2462 MHz 5180 ~ 5240 MHz 5745 ~ 5825 MHz
ANT-HID-DB	Doodle Labs	SMD Antenna 1 (on PCB), 2.0dBi (Max.) 2.4dBi (Max) 3.2dBi (Max)	2412 ~ 2462 MHz 5180 ~ 5240 MHz 5745 ~ 5825 MHz

2.8 Label and compliance information

The final end product must be labeled in a visible area with the following “Contains FCC ID: 2AG87DLM200”.

2.9 Information on test modes and additional testing requirements

Host manufacturer is strongly recommended to confirm compliance with FCC requirements for the transmitter when the module is installed in the host.

2.10 Additional testing, Part 15 Subpart B disclaimer

Host manufacturer is responsible for compliance of the host system with module installed with all other applicable requirements for the system such as Part 15B.

A user's manual for the finished product should include the following statement:
This equipment has been tested and found to comply with the limits for a Class B digital device, pursuant to part 15 of the FCC Rules. These limits are designed to provide reasonable protection against harmful interference in a residential installation. This equipment generates, uses and can radiate radio frequency energy, and if not installed and used in accordance with the instructions, may cause harmful interference to radio communications. However, there is no guarantee interference will not occur in a particular installation. If this equipment does cause harmful interference to radio or televisión reception, which can be determined by turning the equipment off and on, the user is encouraged to try to correct the interference by one or more of the following measures:

© 2023 Doodle Labs. All rights reserved.

• Reorient or relocate the receiving antenna

• Increase the separation between the equipment and receiver

• Connect the equipment into an outlet on a circuit different from that to which the receiver is connected

• Consult the dealer or an experienced radio/TV technician for help

2.11 Note EMI Considerations

Host manufacture is recommended to use D04 Module Integration Guide recommending as "best practice" RF design engineering testing and evaluation in case non-linear interactions generate additional non-compliant limits due to module placement to host components or properties.

2.12 How to make changes

This module is stand-alone modular. If the end product will involve the Multiple simultaneously transmitting condition or different operational conditions for a stand-alone modular transmitter in a host, host manufacturer have to consult with module manufacturer for the installation method in end system. According to the KDB 996369 D02 Q&A Q12, that a host manufacture only needs to do an evaluation (i.e., no C2PC required when no emission exceeds the limit of any individual device (including unintentional radiators) as a composite. The host manufacturer must fix any failure.

ISED Statement

English: This device complies with Industry Canada license-exempt RSS standard(s). Operation is subject to the following two conditions: (1) This device may not cause interference, and (2) This device must accept any interference, including interference that may cause undesired operation of the device.
-French: Le présentappareilestconforme aux CNR d'Industrie Canada applicables aux appareils radio exempts de licence. L'exploitationestautorisée aux deux conditions suivantes: (1) l'appareil ne doit pas produire de brouillage, et (2) l'utilisateur de l'appareildoit accepter tout brouillageradi oélectriquesubi, mêmesi le brouillageest susceptible d'encompromettre le fonctionnement.
This device meets the exemption from the routine evaluation limits in section 2.5 of RSS 102 and compliance with RSS 102 RF exposure, users can obtain Canadian information on RF exposure and compliance.
cet appareil est conforme à l'exemption des limites d'évaluation courante dans la section 2.5 du cnr - 102 et conformité avec rss 102 de l'exposition aux rf, les utilisateurs peuvent obtenir des données canadiennes sur l'exposition aux champs rf et la conformité.
This equipment complies with Canada radiation exposure limits set forth for an uncontrolled environment.
Cet équipement est conforme Canada limites d'exposition aux radiations dans un environnement non contrôlé. This equipment should be installed and operated with minimum distance 20cm between the radiator & your body.
Cet équipementdoit être installé et utilisé à une distance minimale de 20 cm entre le radiateur et votre corps.

© 2023 Doodle Labs. All rights reserved.

ISED Modular Usage Statement

NOTE 1: When the ISED certification number is not visible when the module is installed inside another device, then the outside of the device into which the module is installed must also display a label referring to the enclosed module. This exterior label can use the wording ”Contains transmitter module IC: 21411-DLM200” or “Contains IC: 21411-DLM200”.

NOTE 1: Lorsque le numéro de certification ISED n'est pas visible lorsque le module est installé dans un autre appareil, l'extérieur de l'appareil dans lequel le module est installé doit également afficher une étiquette faisant référence au module inclus. Cette étiquetteextérieure peut être libellée Contient le module émetteur IC: 21411-DLM200 ou Contient IC: 21411-DLM200.

The device for operation in the band 5150–5250 MHz is only for indoor use to reduce the potential for harmful interference to co-channel mobile satellite systems.

L'appareil destiné à fonctionner dans la bande 5150-5250 MHz est uniquement destiné à une utilisation en intérieur afin de réduire le potentiel d'interférences nuisibles aux systèmes mobiles par satellite cocanaux.

Label in User Manual:

Wi-Fi 11n Module

Model: DLM200

FCC ID: 2AG87DLM200

HVIN: DLM200

IC: 21411-DLM200

Label on Shipping Box: 40 mm x 40mm

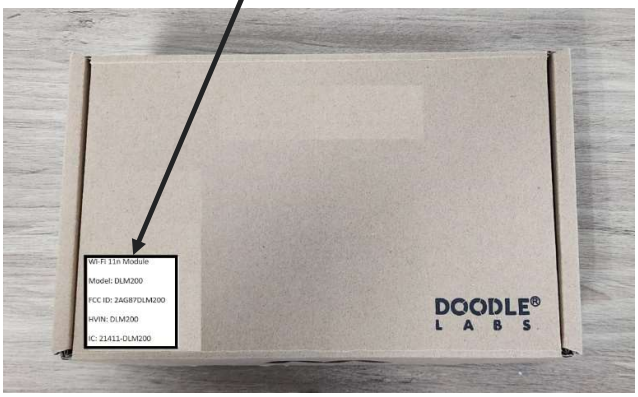

© 2023 Doodle Labs. All rights reserved.