01 Packing List

Thank you for choosing our product!
We sincerely hope that wizarPOS will enable smart payments and enhance the convenience of your daily business.

Before powering up the device, please check the terminal and accessories as follows:

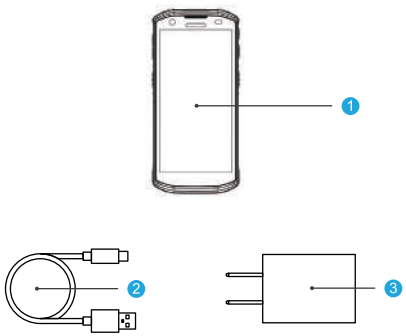

1. Q3 pda
2. USB Cable
3. 5V 2A Adaptor

Please contact your product provider if anything is missing.

02 Front View

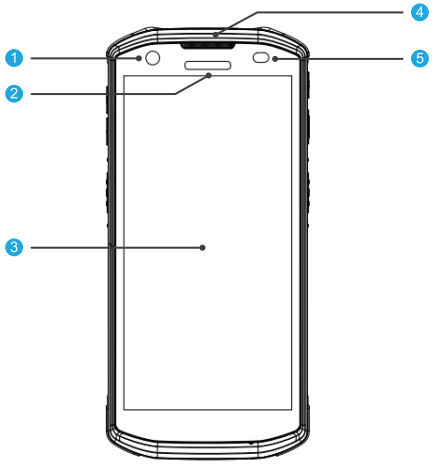

1. Front Camera
2. Charging Indicator
3. Screen
4. Receiver
5. Light Sensor

03 Left / Right View

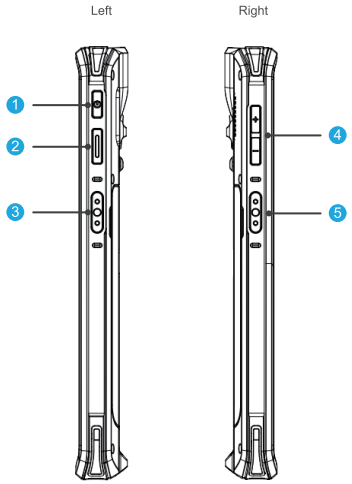

1. Power on /off
2. Function
3. Scan Key
4. Volume Button
5. Scan Key

WIZARPOS User Manual Q3 PDA

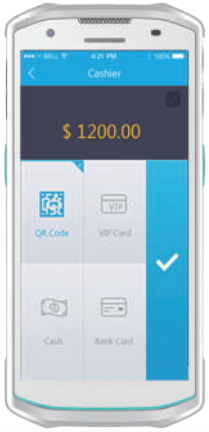

www.wizarpos.com

04 Top / Bottom View

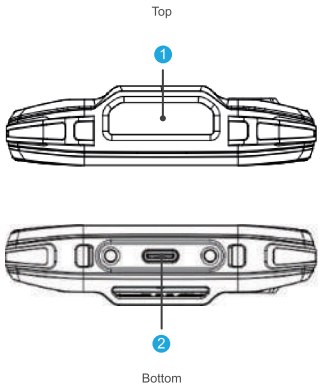

1. Scan Engine
2. Type-C Charging / Data Interface

05 Back View

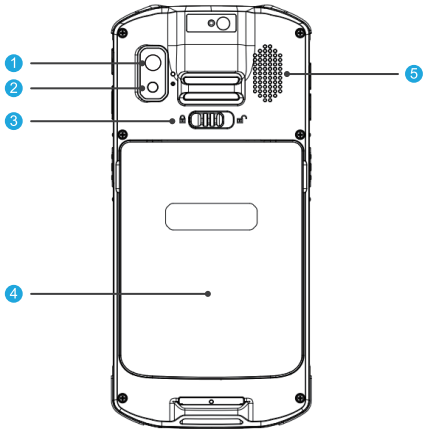

1. Rear Camera
2. Flashlight
3. Battery Lock
4. Battery Compartment
5. Speaker

06 Back View

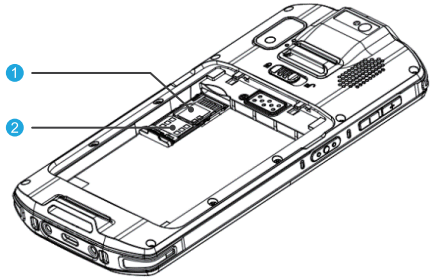

1. SIM Card1 or Micro-SD Card Slot
2. SIM Card2 Slot

Thank you for choosing WizarPOS !

Intelligent + Security

1 Power on/off

a) Power on: Press the power botton for 3 seconds to turn on the terminial

b) Power off: Press the power botton for 3 seconds. Click power off and select ok in the pop-up window to shut down the terminal.

2 Access network

After powering on the termial, please connect to Wi-Fi or 4G to access network services.

WLAN Setting:

a) Swipe down from the top of the screen to access the notification panel. Click the Wi-Fi button to turn on or off the internet. Hold on the button to get into the Wi-Fi setting.

b) You can also click Settings and choose WLAN to get into Wi-Fi settings. Activate the Wi-Fi function, select the network that has been automatically detected, and enter the password. You can also tap on 'Add Network', input the network name, and then enter the password to connect to a Wi-Fi network. Swipe up from the screen to access the 3-button nevigation. Click the circle to return to the home page. You can repeat this process multiple times for any additional networks available, including 4G and Mobile Phone Hot Spots.

3 Settings all done

Once you have completed the above settings, please contact your service provider for assistance with application downloads and technical support.

4 Terminal self-diagnostic

To verify the functionality of the equipment, utilize the terminal's self-check capabilities.Click Settings > Self-check and choose the functionality or parts that you want to test.

5 Card Transactions

Contactless Transactions: This terminal uses the contactless on screen transaction mode. Tap a contactless enabled card or smartphone on the terminal screen.

Specification	Detailed Description
OS	Secure Android12
Processor	Qualcomm Octa-Core @2.0GHz
Memory	4GB RAM + 64GB Flash
Connectivity	GSM, WCDMA, FDD-LTE, TDD-LTE, Wi-Fi 2.4G & 5G, BT 5.0
Card Readers	USB Type-C 3.0, GPS
Certaification	NFC contactless: ISO 14443 Type A & B, MIFARE, Sony Felica
Communication	RoHs, FCC, CE
Environment	Drop (Multiple): 1.5m (5ft) to concrete per MIL-STD 810H. ESD: ±15 kV Air and +8 kV Direct IP 67 dust and waterproof rating
Power	5V 2A adapter, USB Type-C
Camera	Front-facing: 5MP, AF Rear-facing: 13MP, AF, high brightness flash
Sensors	Gravity, Gyroscope, Geomagnetism, Light & Proximity, Barometer (Optional)
Dimensions	160x74 x14.35 mm (6.3 x 2.9 x 0.56 inches)
Weight	262g
Display	5.5" multi-touch color LCD panel (720x1440) covered with Gorilla Glass™m 3
Battery	3.85V 5000mAh
Scanner (Optional)	All major 1D & 2D symbologies Depth of Field EAN 13 (5mil) 100mm-245mm Depth of Field Code 39 (5mil) 90mm-345mm Depth of Field PDF417 (4mil) 120mm-160mm Depth of Field DataMatrix(15mil)50mm-355mm Depth of Field QR (15mil) 55mm-375mm The read speed is up to 5 times/sec'
Accessories	Wrist strap, protection cover

All features and specifications are subject to change without notice.
Contact wizarPOS website for more details.

www.wizarpos.com

Trouble	Trouble shooting
Cannot connect the mobile network	◆ Check whether the function of “data” is open. ◆ Check whether the APN is correct. ◆ Check whether the data service of SIM is activated.
Display unstable	◆ The display may be interfered by instability voltage when charging, please reconnect the plug.
No response	◆ Restart the APP or operation system.
Operation very slow	◆ Please exit APPs which are not necessary.

Safety Warning

1. WizarPOS provides after-sales service in accordance with applicable laws and regulations. Please review the warranty terms outlined below.
2. Warranty Period: The terminal and charger are covered by a one-year warranty. During this period, if the product experiences a failure not caused by user negligence, WizarPOS will offer free repair or replacement services. For assistance, it is recommended to first contact your local distributor, and provide a completed warranty card with accurate information.
3. The warranty does not cover the following situations: unauthorized maintenance of the terminal, modifications to the terminal' s operating system, installation of third-party applications causing malfunction, damage due to improper use (such as dropping, crushing, impact, immersion, fire, etc.), missing or inaccurate warranty information, expired warranty period, or any other activities that violate legal regulations.
4. Follow installation instructions carefully and use only the specified power adapter. Replacing it with other adapters is prohibited. Ensure t hat the power socket meets the required voltage specifications. It is recommended to use a socket with a fuse and ensure proper grounding.
5. To clean the terminal, use a soft, lint-free cloth—avoid using chemicals and sharp objects.
6. Keep the terminal away from liquids to prevent short circuits or damage caused by splashes, and avoid inserting foreign objects into any ports. The terminal and battery should not be exposed to direct sunlight, high temperatures, smoke, dust, or humidity.
7. If the terminal malfunctions, contact certified POS maintenance professionals for repair. Unauthorized personnel should not attempt repairs.
8. Do not modify the terminal without authorization. Modifying a financial terminal is illegal. Users assume the risks associated with installing third -party applications, which may cause the system to operate at reduced speeds.

9. In case of abnormal odors, overheating, or smoke, immediately disconnect the power supply.
10. Do not place the battery in fire, disassemble it, drop it, or apply excessive pressure. If the battery is damaged, immediately discontinue use and replace it with a new one. The battery charging time should not exceed 24 hours. If the battery is not used for an extended period, charge it every six months. For optimal performance, replace the battery after two years of continuous use.
11. The disposal of batteries, equipment, and accessories must comply with local regulations. These items cannot be discarded as household waste. Improper disposal of batteries may lead to hazardous situations such as explosions.

Environment

Operating temperature
-10°C~50°C (+14°F to 122°F)

Operating humidity
5%~95% No condensation

Storage temperature
-20°C~70°C (-4°F to 158°F)

wizarPOS

V1.0, Nov 2024

FCC Statements

This device has been tested and found to comply with the limits for a Class B digital device, pursuant to part 15 of the FCC Rules. These limits are designed to provide reasonable protection against harmful interference in a residential installation. This equipment generates, uses and can radiate radio frequency energy and, if not installed and used in accordance with the instructions, may cause harmful interference to radio communications. However, there is no guarantee that interference will not occur in a particular installation. If this equipment does cause harmful interference to radio or television reception, which can be determined by turning the equipment off and on, the user is encouraged to try to correct th e interference by one or more of the following measures:

- Reorient or relocate the receiving antenna.
- Increase the separation between the equipment and receiver.
- Connect the equipment into an outlet on a circuit different from that to which the receiver is connected.
- Consult the dealer or an experienced radio/TV technician for help.

Caution: Any changes or modifications to this device not explicitly approved by manufacturer could void your authority to operate this equipment.

This device complies with part 15 of the FCC Rules. Operation is subject to the following two conditions:

This device may not cause harmful interference, and (2) this device must accept any interference received, including interference that may cause undesired operation.

Specific Absorption Rate (SAR) information:

This device meets the government's requirements for exposure to radio waves. The guidelines are based on standards that were developed by independent scientific organizations through periodic and thorough evaluation of scientific studies. The standards include a substantial safety margin designed to assure the safety of all persons regardless of age or health. FCC RF Exposure Information and Statement the SAR limit of USA (FCC) is 1.6 W/kg averaged over one gram of tissue. Device types: This device has also been tested against this SAR limit. This device was tested for typical body-worn operations with the back of the This device kept 0mm from the body. To maintain compliance with FCC RF exposure requirements, use accessories that maintain an 0mm separation distance between the user's body and the back of the This device. The use of belt clips, holsters and similar accessories should not contain metallic components in its assembly. The use of accessories that do not satisfy these requirements may not comply with FCC RF exposure requirements, and should be avoided.

CE DOC

RED 2014/53/EU

Declaration of Conformity

Hereby, {WizarPos International Co., Ltd. } declares that this {Smart POS} product is in compliance with essential requirements and other relevant provisions of Directive 2014/53/EU.

Manufacturer：WizarPos International Co., Ltd.

Address：10th floor, No.509, Wuning road, Shanghai, China

Importer：XXXXX

Address：XXXXX

Specifications

Hardware Version: 1.00

Software Version: 1.00

BT(BR+EDR) Frequency Range: 2402-2480MHz(Max power: 2.53dBm)

BLE Frequency Range: 2402-2480MHz(Max power: 1.90dBm)

2.4G WIFI Frequency Range: 2412-2472MHz(Max power: 14.67dBm)

5.2G WIFI Frequency Range: 5180-5240MHz(Max power: 10.83dBm)

5.8G WIFI Frequency Range: 5745-5825MHz(Max power: 9.69dBm)

LTE FDD Band:

GSM 900 Frequency Range: 925MHz~960MHz(Max power: 32.66dBm)

DCS 1800 Frequency Range: 1805MHz~1880MHz(Max power: 29.74dBm)

WCDMA Band I Frequency Range: 1920MHz~1980MHz(Max power: 23.33dBm)

WCDMA Band VIII Frequency Range: 880MHz~915MHz(Max power: 23.31dBm)

E-UTRA Band 1 Frequency Range: 1920MHz~1980MHz(Max power: 22.22dBm)

E-UTRA Band 3 Frequency Range: 1710MHz~1785MHz(Max power: 22.89dBm)

E-UTRA Band 7 Frequency Range: 2500MHz~2570MHz(Max power: 22.00dBm)

E-UTRA Band 8 Frequency Range: 880MHz~915MHz(Max power: 22.49dBm)

E-UTRA Band 20 Frequency Range: 832MHz~862MHz(Max power: 22.82dBm)

E-UTRA Band 34 Frequency Range: 2010MHz~2025MHz(Max power: 23.73dBm)

E-UTRA Band 38 Frequency Range: 2570MHz~2620MHz(Max power: 21.73dBm)

E-UTRA Band 40 Frequency Range: 2300MHz~2400MHz(Max power: 21.53Bm)

E-UTRA Band 41 Frequency Range: 2496MHz~2690MHz(Max power: 21.85Bm)

NFC Frequency Range: 13.56MHz, H-field strength 16.61 At 10m (dBuA/m)

GPS Receiver Frequency Range: 1575.42MHz

SAR Max. Values: 0.934W/kg (10g) for Body; 0.174W/kg (10g) for Head

RF test distance is 5mm.

5G wifi indoor used only.

The device is restricted to indoor use only when operating in the 5150-5350MHz WLAN band

in the following countries：

AT	BE	BG	HR	CY	CZ	DK
EE	FI	FR	DE	EL	HU	IE
IT	LV	LT	LU	MT	NL	PL
PT	RO	SK	SI	ES	SE	UK

Repair date	Repair content

Repair date	Repair content

For more information, please log on to the company's official website

http://www.wizarpos.com

wizarPOS

V1.0, Nov 2024