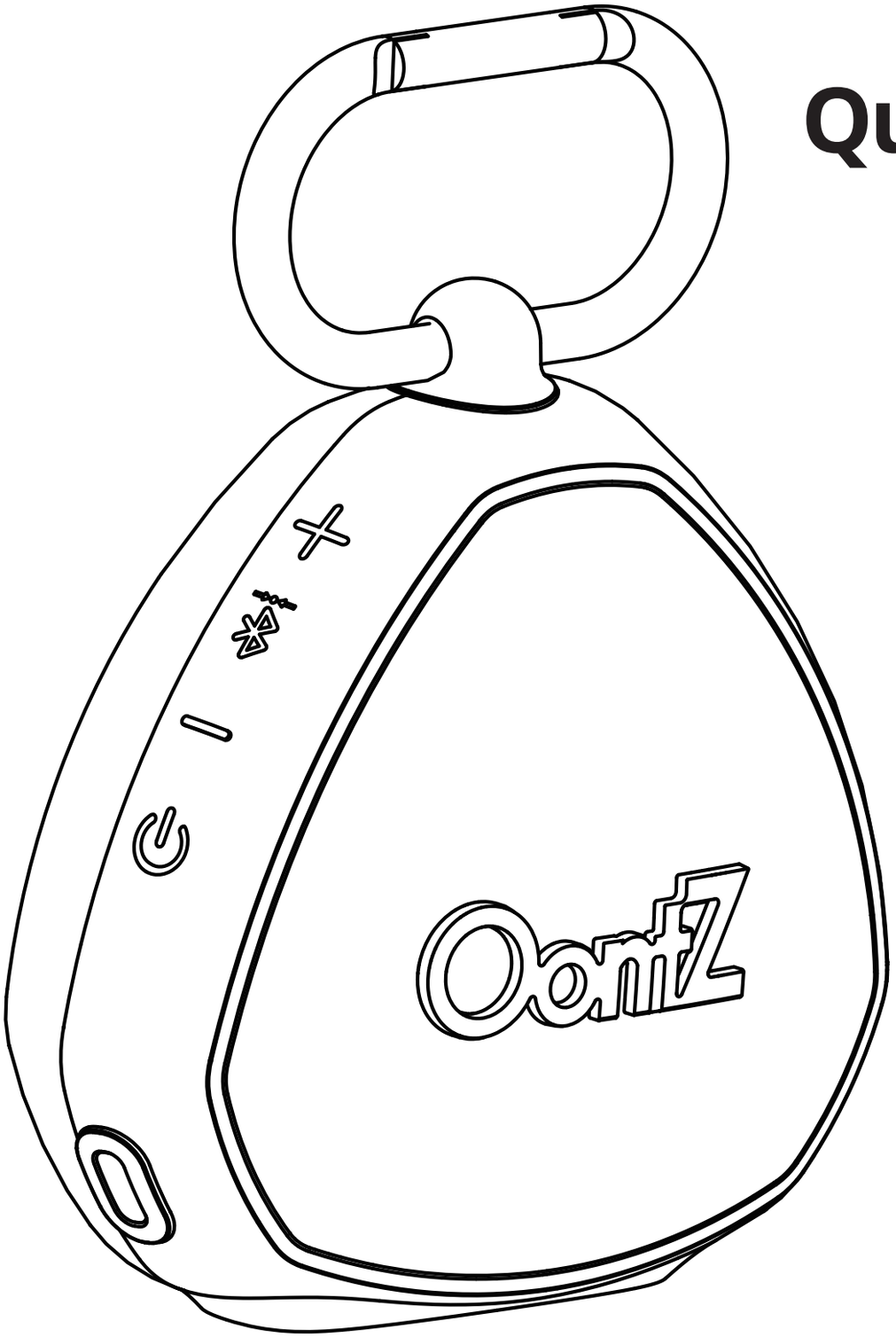

Quick Start Guide

OontZ CLIP

Portable Bluetooth Speaker
OontZ Dual Speaker Model

Designed and Engineered By
CAMBRIDGE SOUNDWORKS®

TheOontZ.com

Table of Contents

	Pages
In the Package	1
Carabiner	2
Resistant Strap	3
Buttons	4
Lights	5
Connectors	6
Play Horizontally or Vertically	7
Battery Features	8
Charging the Battery	9-10
Turning On and Off	11
Pair & Connect—Step 1	12-13
Pair & Connect -- Step 2	14
— From Your Amazon Echo device	
— From Your Amazon Echo device (continued)	
IPX7 WaterProof	15
Wireless Hands Free Personal Speakerphone	16
OontZ Dual Speaker - Connect two OontZ Clip Speakers Together	17 - 20
Resetting Your OontZ Clip	21
Troubleshooting & Customer Support	22
Safety and Precautions	23 - 24

In the Package

OontZ CLIP

Quick-Start Guide

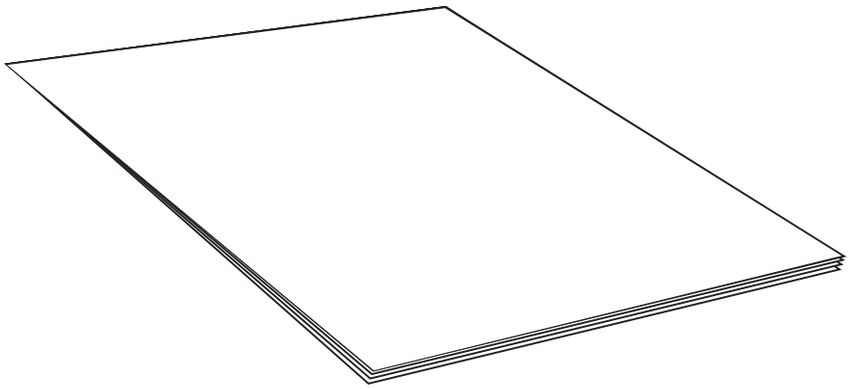

USB Type C Charging Cable

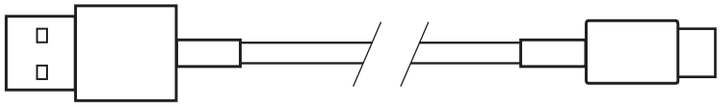

Note: The USB Type C Charging Cable is packed below the cardboard insert at the end of the triangle box.Slide out the insert to locate the cable.

Carabiner

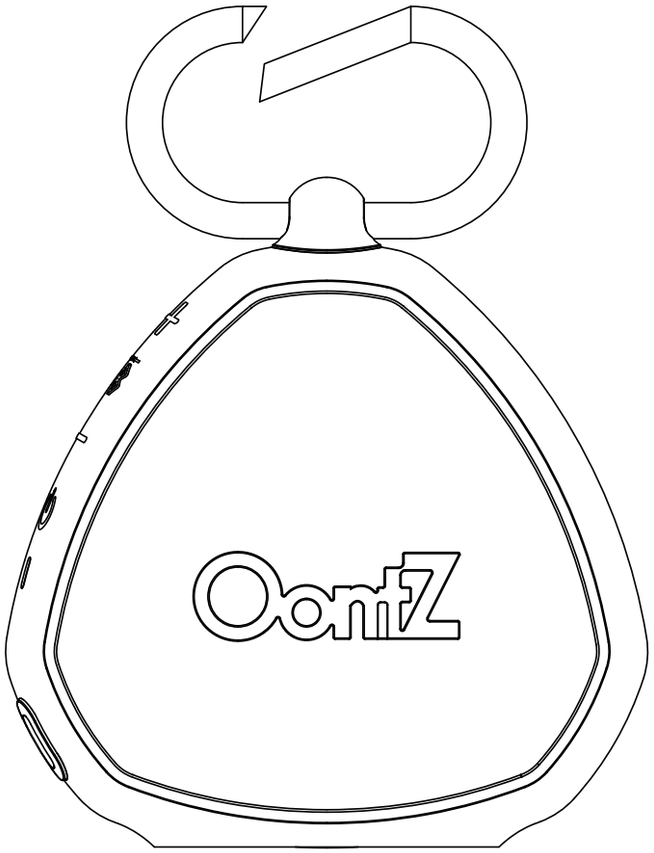

IMPORTANT: The carabiner of OontZ Clip is not for climbing.

Resistant Strap

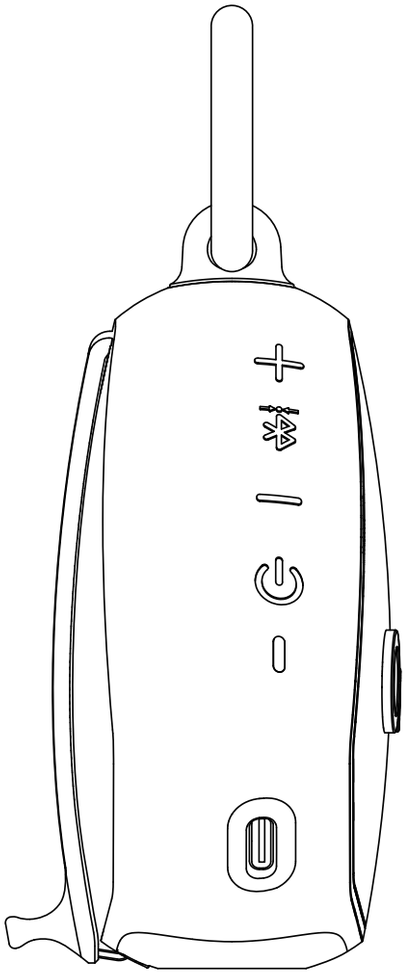

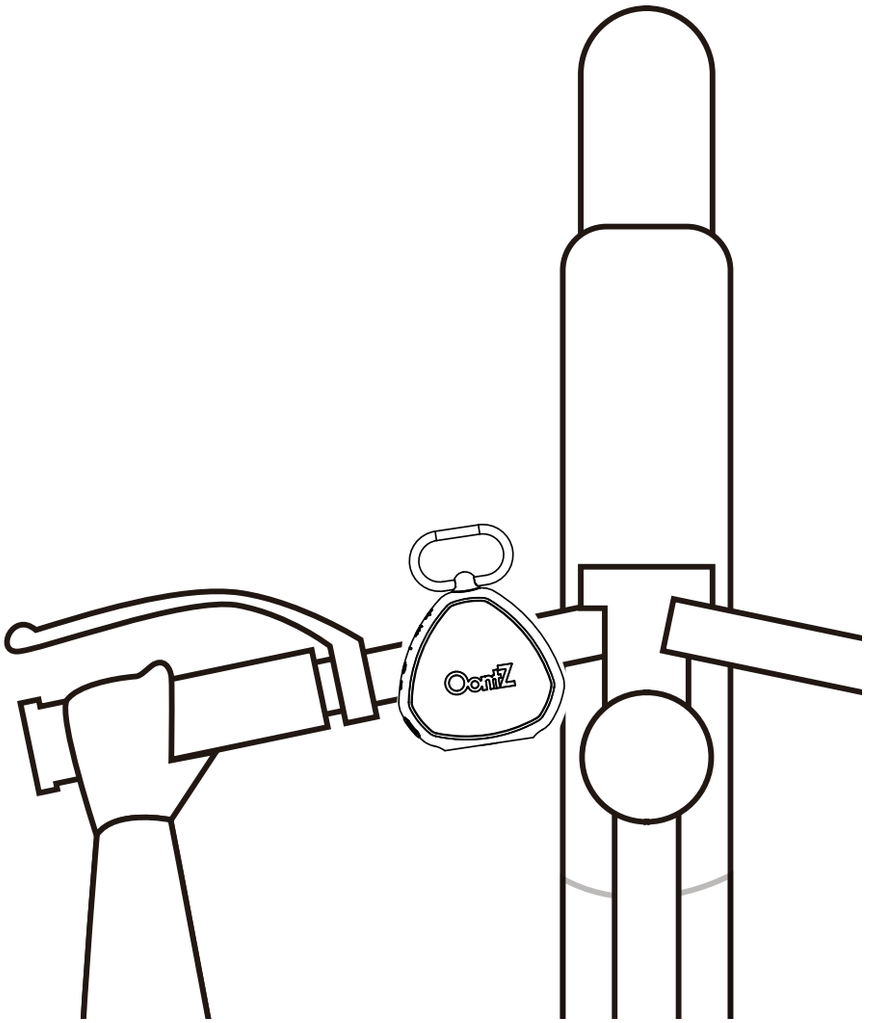

OontZ Clip comes equipped with an easy-to-use, tear resistant silicone strap. Secure it to your backpack, beach cooler, or handlebars, and the reliable strap will hold tight through shocks and shakes.
Tips： suit for bike handlebar,not recommend use on exceed this size.

Buttons

Bluetooth/play/pause/speaker phone/dual speaker button (Multi-function) Button

– Press and Release to Pause/Play

Power Button

— Button (Dual Function)

Volume Down

– Press and Release — to decrease volume one level; repeat until volume lowers to desired level

– Holding the button down will result in track back

Track Back

– Press and Hold — Down for 2 Seconds

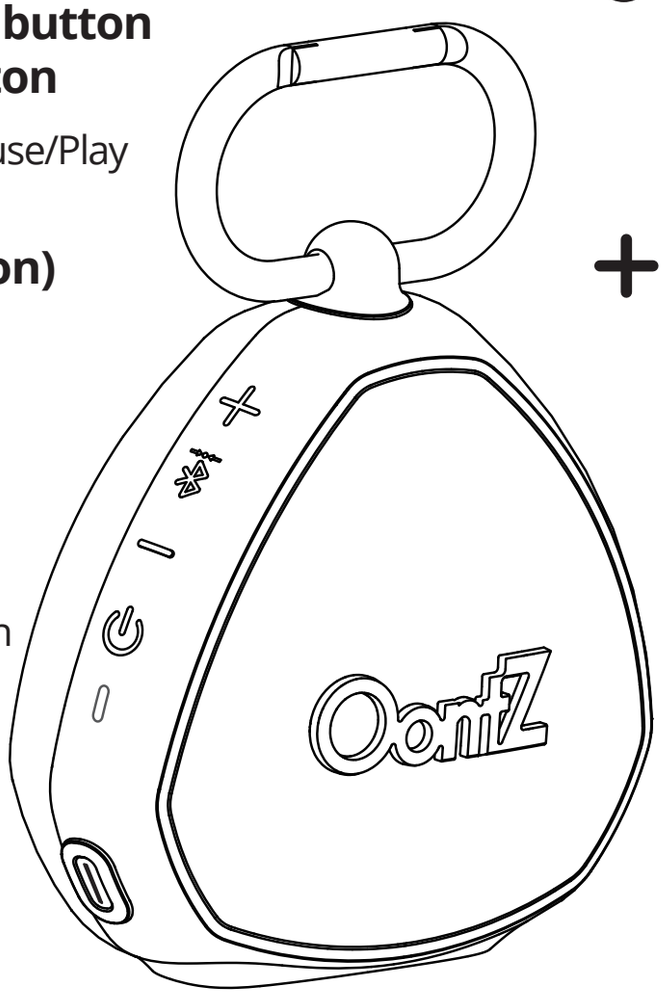

+ Button (Dual Function)

Volume Up

– Press and Release + to increase volume one level; repeat until volume raises to desired level

– Holding the button down will result in track back

Track Forward

– Press and Hold + Down for 2 Seconds

Important - Make sure the volume level is set high on your audio source device. The volume on the OontZ Clip and your audio source device both need to be set to the highest level for the loudest volume. The volume controls on your audio source device and the speaker work independently of each other.
Important - The track back feature is application-dependent. Some apps may not support track back, track forward, or play/pause

Lights

Lit Blue when speaker is on:

– Flashing Blue
speaker is in pairing mode

– Solid Blue
speaker is connected

Lit White/blue when the speaker is the second speaker connected in OontZ Dual Speaker

– With a second OontZ CLIP

– speaker (sold separately) you can wirelessly connect both speakers together to play with OontZ Dual Speaker.

– For OontZ Dual Speaker instructions please see page 18.

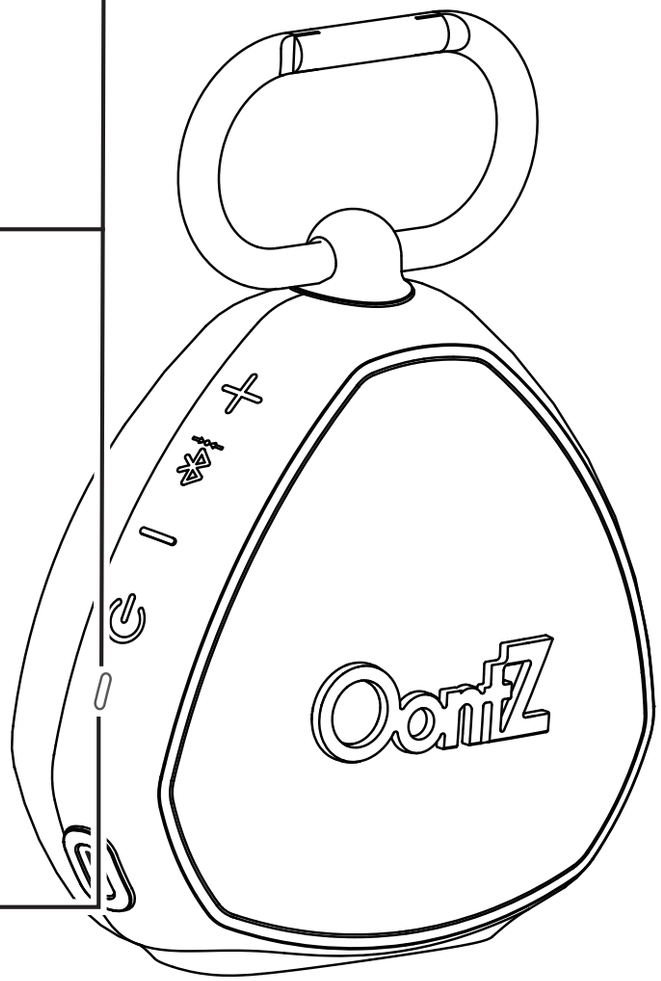

Lit Red when charging:

– Slowly flashing Red
battery is charging

– Solid Red
battery is fully charged

Connectors

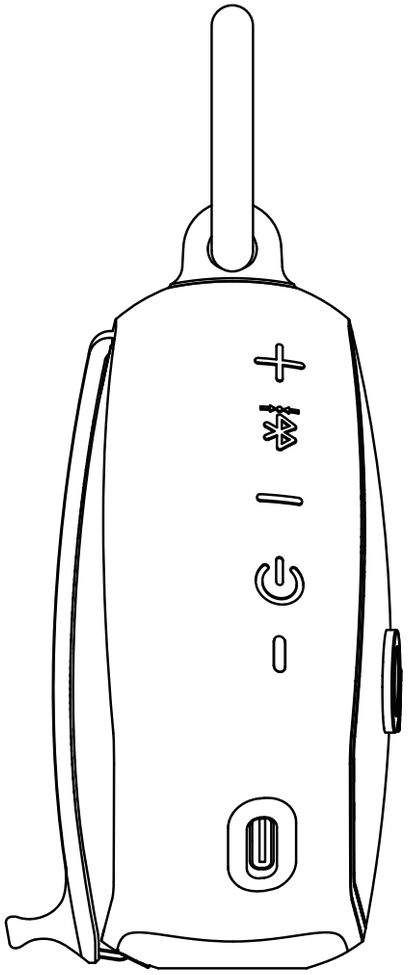

Built-in Mic for Speakerphone

USB Type C Charging Connector

Note: The ALARM will sound when the USB is charged after it is flooded.

Play Horizontally or Vertically

Play Horizontally
Controls on side

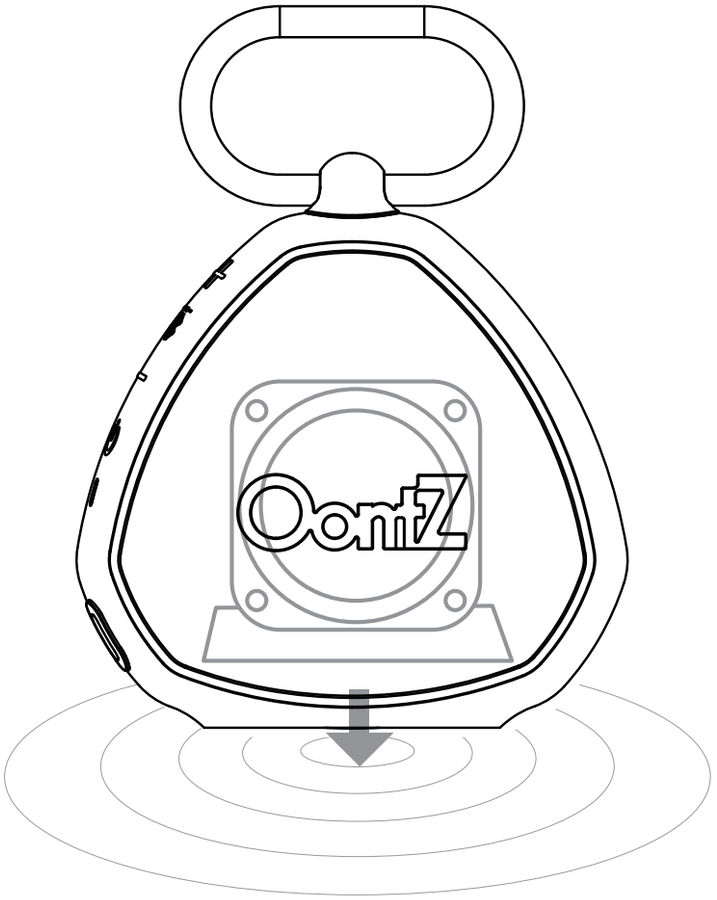

Play Vertically
Controls on top

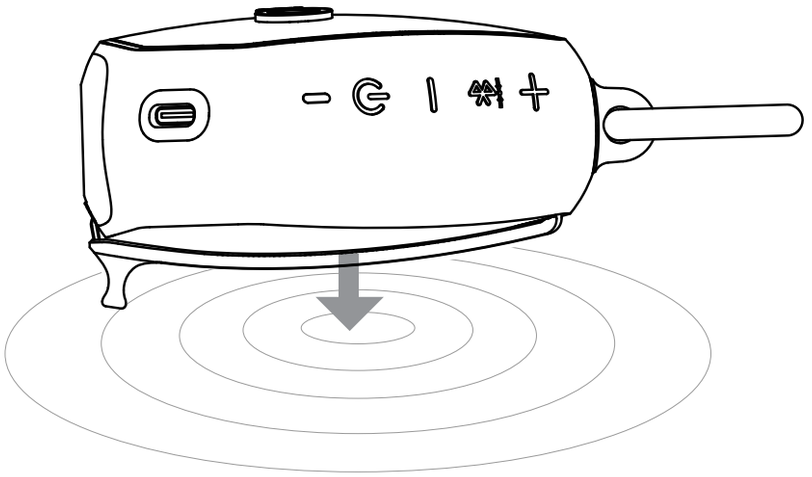

Battery Features

USB Type C Charging Connector

– The rechargeable battery comes with a partial charge and the speaker is ready to play.
– For maximum playtime, fully charge the battery.
– You can play while charging.

Low Charge Remaining

– When the battery charge has less than 15% remaining the Red Light will begin flashing rapidly.
– The volume will decrease to preserve the remaining battery charge.

Music Play Time

– Up to 12 hours on a full charge, at 2/3 volume.
– Louder volumes will reduce the battery play time.

Power Saving Feature

– When playing from battery power the OontZ Clip will turn off after 15 minutes of not playing audio to conserve the battery charge. *
– When plugged into a charging source the OontZ Clip will remain on until you turn the power off.
– You can continue to keep the speaker plugged into a charging source even when it is fully charged.

Charging the Battery

Lit Red when charging:

– Slowly flashing Red

battery is charging

– Solid Red

battery is fully charged

– Insert the small end of the USB Type C Charging Cable into the USB Type C Charging Connector as shown.

– Insert the larger end of the USB Type C Charging cable into a USB wall charger for a Smartphone or iPhone, or a USB port on your laptop/computer to charge the battery (see illustrations on page 8).

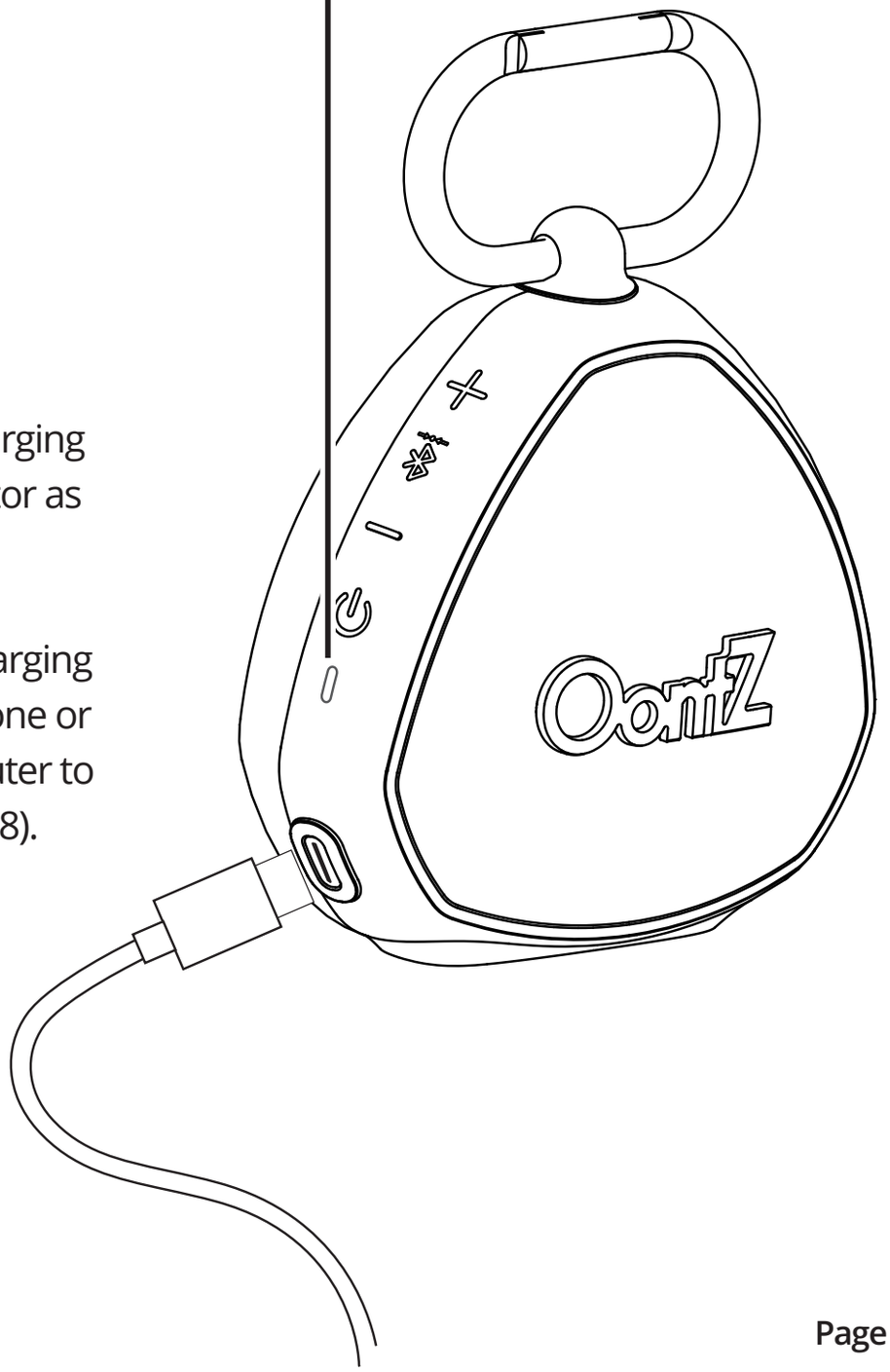

Charging Time:
Up to 3 hours to fully charge a low battery.

Charging the Battery (continued)

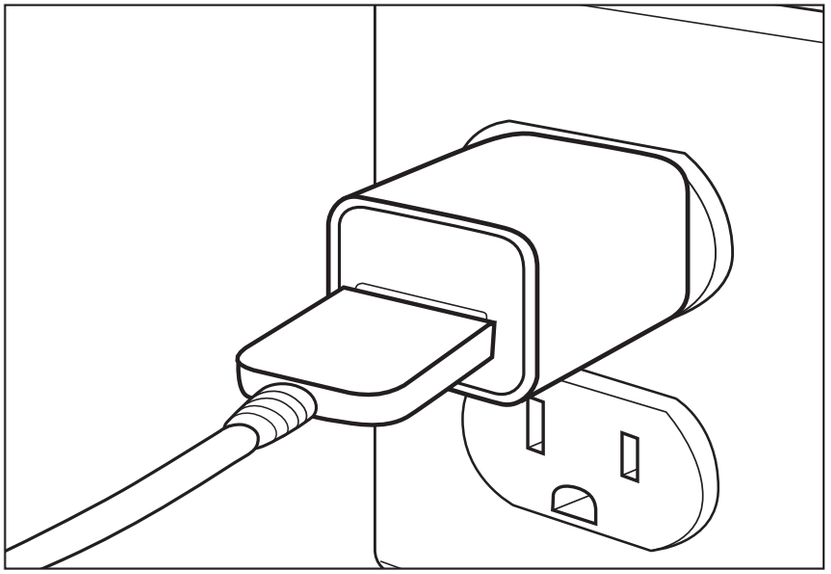

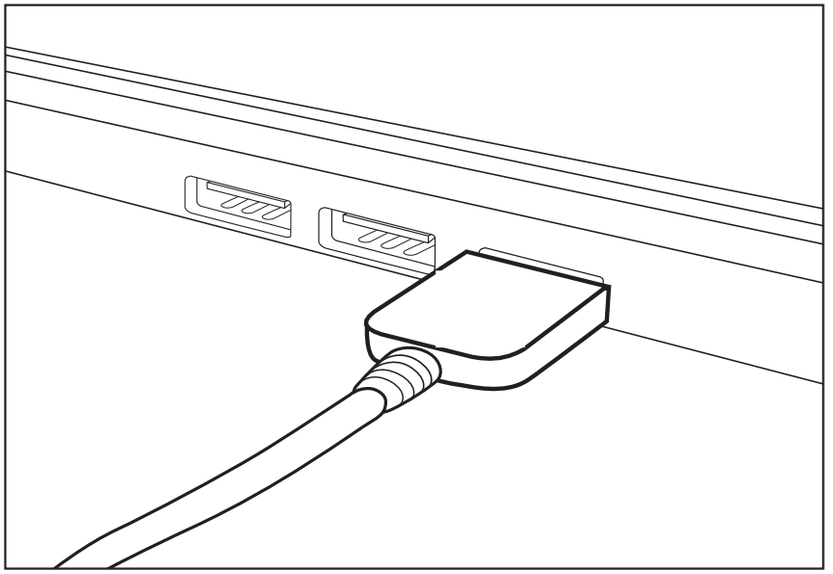

Insert the larger end of the USB Type C Charging Cable into a USB wall charger for a Smartphone or iPhone (USB wall charger* that is 5V 1.0A maximum), or a USB port on your laptop/computer to charge the OontZ Clip battery.

Note: When charging with Type C， if there is alarm sound“dododo”means there have water left on the Type-C socket.
Pls remove the water with tissue and re-charging.

* Only use a USB wall charger that is UL listed. A USB wall charger will have the logo UL printed on it.

Turning On and Off

Turn ON
– Press and hold the Power Button ⏻ for 1 second

Red Light turns on
– will turn off after 3 seconds if playing from battery power

Blue Light turns on

– Flashing Blue
The speaker is turned on and is in pairing mode

– Solid Blue
The speaker is turned on and has connected to an audio source device and is ready to play

Turn OFF
– Press and Hold Down the Power Button ⏻ for 3 Seconds

Blue Light will turn off

Pair & Connect ——Step 1

– Make sure your OontZ Clip battery has a sufficient charge, it is not able to connect when the charge is too low.

– Your device needs to be within 100 unobstructed feet of the OontZ Clip to pair and connect. If there is an issue when connecting please move your device closer to the speaker, then pair and connect.

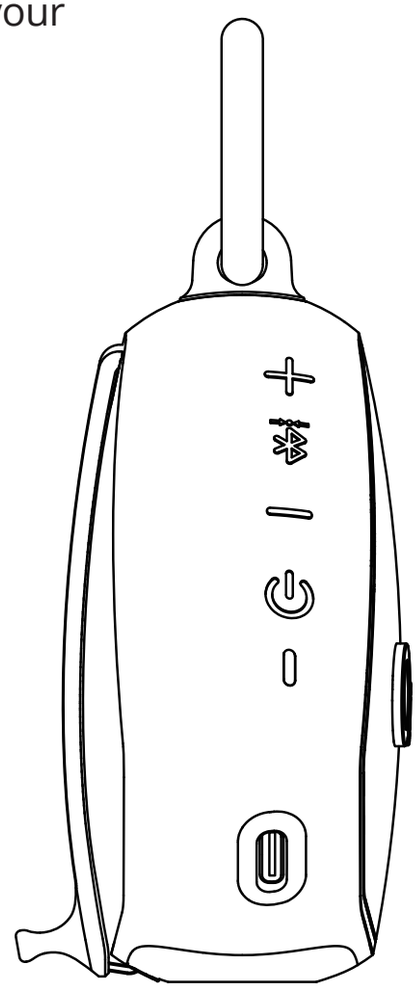

Turn ON your OontZ Clip

Flashing Blue Light

– The OontZ Clip is ready to pair and connect.

Solid Blue Light

– The OontZ Clip has automatically reconnected to the last device it was connected to and is ready to play.

– The OontZ Clip will automatically try to connect to the last device it was connected to each time it is turned on and that device is within range.*

The OontZ Clip can be connected to one device at a time.

– To pair and connect to a different device, you need to first disconnect the currently paired device.

– To disconnect the current device, press and hold down the **Bluetooth button** for 3 seconds.

– The **Blue Light** will begin **flashing** and the OontZ Clip is ready to pair and connect to your device.

*Exception: certain devices may not automatically reconnect.

Amazon Echo devices will not automatically reconnect. You will need to say "Alexa, connect my speaker"

Pair & Connect with Your Device——Step 2

— With Your iPhone, iPad, iPod, Smartphone, Tablet & Mobile Devices

– Go to Settings > Bluetooth, check Bluetooth is on
– Select 'OontZ Clip xxx' when it appears under DEVICES (xxx: 3 characters which are unique to your speaker)
– Your device will connect in a few seconds
– The Blue Light will turn solid blue and there will be a quiet chime
You can now play your audio wirelessly to your OontZ Clip

Note: Your Smartphone or Tablet instructions may vary

Important – The volume control on your device and the speaker work independently of each other. To play the speaker at the loudest volume, set the volume on your device to maximum and raise the volume on the speaker to maximum.

— With Your Apple Mac or Windows Laptop/Computer

For the pairing and connecting guide for your Apple Mac or Windows laptop/computer, please visit: TheOontZ.com/pairing.

Pair & Connect -- Step 2

— From Your Amazon Echo device

To pair and connect the first time with an Amazon Echo device use the Alexa app on your device.

– Open the Alexa app
– Press 'Devices' by pressing the 'Devices' button in the bottom right corner
– Press 'Echo & Alexa'
– Select your Amazon Echo device under list of devices displayed by pressing it
– Press 'Bluetooth Devices'
– Press 'Pair A New Device'
– Select the 'OontZ Clip DS xxx' (xxx: 3 characters unique to your speaker) when it appears
– The OontZ Clip will make a 'ding' sound when connected

To connect the next time, turn on the OontZ Clip and say "Alexa, connect my speaker" or "Alexa, pair"

— From Your Amazon Echo device (continued)

We recommend to:
1)Keep the OontZ Clip plugged into a USB wall charger.
It can remain on and available to play from the Amazon Echo device.
– Or –
2)Turn off the OontZ Clip when you are done listening.
– Either turn off the speaker by pressing and holding down the power button ⏻ for 3 seconds,
– or say "Alexa, disconnect my speaker" and the OontZ Clip will automatically turn off after 15 minutes.
– When you want to connect and play to the speaker again turn on the OontZ Clip and say "Alexa, connect my speaker" or "Alexa, pair".

For assistance with the Alexa app, contact Amazon's Customer Service.
Open the Alexa app and select Help & Feedback > Email Customer Service

IPX7 WaterProof

The OontZ Clip is Waterproof and it is IPX7 certified
The perfect speaker for listening to your favorite music in any environment
Perfect for taking to the lake, the beach, listening by the pool, listening in the shower

IPX7 means the OontZ Clip is WaterProof and can handle water spray or being splashed and can handle being partially or
fully submerged in water up to a maximum of 3 feet deep, for up to a maximum of 30 minutes
Important Safety Precaution: When the OontZ Clip speaker is plugged in to a charging source with the USB Type C Charging Cable, never use the speaker in the shower, bath, or near water, to prevent risk of electric shock.

Wireless Hands Free Personal Speakerphone

– The Wireless Hands Free Personal Speakerphone feature works over Bluetooth with Smartphones and iPhones only

– This feature is not supported when connected to PCs, laptops, Apple Mac or other types of devices.

To answer an Incoming Call / To End a Call

– Press and Release the Bluetooth Button

To Reject an Incoming Call

– Press and Hold Down the Bluetooth Button for 2 Seconds.

– Please keep the speaker close in front of you so you may be heard clearly by the listener.

– You can use your Smartphone or iPhone to switch between using Hands Free Speakerphone and your phone.

OontZ Dual Speaker - Connect two OontZ Clip Speakers Together

Play your music wirelessly through both speakers up to 66 feet apart*

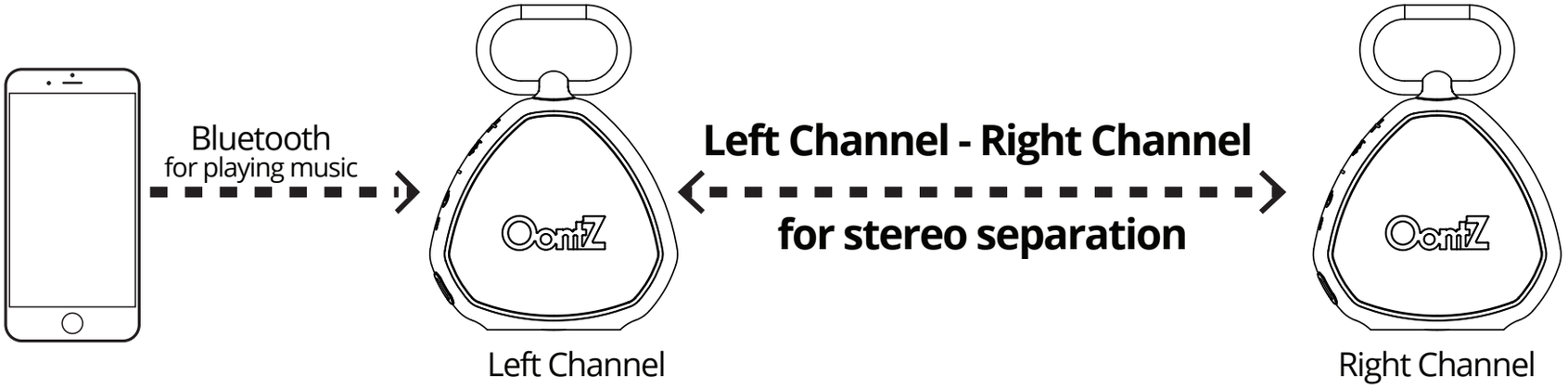

*Placing the speakers on the ground or having walls or obstructions between the speakers will significantly reduce the distance apart the two speakers can play together

Connecting two OontZ Clip speakers together for Left Channel - Right Channel

– Turn on both OontZ Clip speakers.

– Pair and Connect one of the speakers with your device. When connected the Blue Light will be lit Solid Blue. This speaker will serve as the **Play Control Speaker**.

The second speaker must not be connected to any device, its Blue Light needs to be flashing. If the second speaker has a solid Blue Light it is connected to a device and you need to disconnect it by pressing and holding down the **Dual speaker Button** for 3 seconds until the Blue Light begins flashing.

-On the **Play Control Speaker** (speaker with solid Blue Light) press and hold down the **Dual speaker Button** for 3 seconds until the **Play Control Speaker** says “Dual Pairing”.

– After a few seconds the **Play Control Speaker** will say “Left Channel” and the second speaker will say “Right Channel”. The **Play Control Speaker** speaker light will remain solid Blue and the second speaker light will be solid White. The OontZ Clip speakers will be connected together for Left Channel - Right Channel and you are ready to play.

Two OontZ Clip Speakers connected for Left Channel - Right Channel

Play Control Speaker
Lit Blue

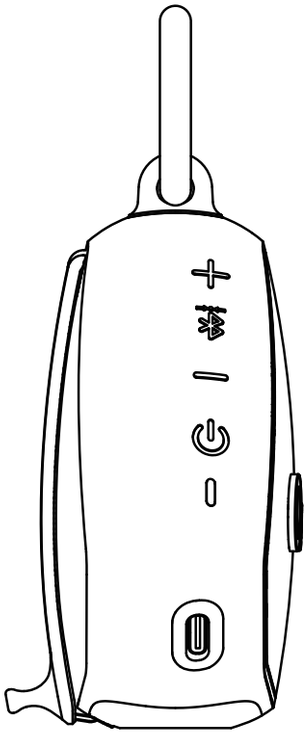

Second Speaker
Lit White

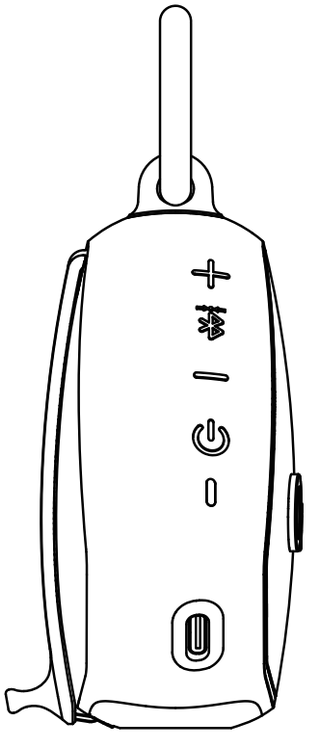

–Use the buttons on the Play Control Speaker for play/pause, track back, track forward, answer and end phone calls. These controls are disabled on the second speaker when paired together.
–Use the Play Control Speaker for connecting to different audio devices via Bluetooth . The Bluetooth is disabled on the second speaker when paired together.
–Speakerphone call audio will only play through the Play Control Speaker

OontZ Dual Speaker - Important Notes

Turning the speakers off
– Turning the Play Control Speaker off will turn both speakers off.
– Turning the second speaker off first will only turn that speaker off and the Play Control Speaker will play as a single speaker.

Turning the speakers back on
– Turn both speakers on and they will automatically try to connect to each other again.
– Turn one of the speakers on and a device can connect with it, and play as a single speaker.

Disconnecting the two speakers from each other
– Both speakers need to be turned on.
– On the P**lay Control Speaker** press twice times the **Play/Pause button** . The White Light on the second speaker will turn off and the speakers will be disconnected from each other.

Not Recommended to play the audio from a video in OontZ Dual Speaker
– It is not recommended to play the audio from a video with two OontZ Clip speakers connected in OontZ Dual Speaker. Playing the audio from a video or TV in OontZ Dual Speaker will have a delay in the audio playback from a video and will cause the audio and video to play out of sync with each other.

Resetting Your OontZ Clip

Step 1: Remove the USB Type C Charging Cable if connected.

Step 2: Press and hold down the **Power button** ⏻ and ▬ button together for 1 second, then release.

Step 3: The speaker has now been reset and you can turn it on.

Troubleshooting

For issues with your OontZ Clip, please view our troubleshooting tips at:

TheOontZ.com/troubleshooting

and select the OontZ Clip Dual Speaker

Customer Support

If you have any issues with your OontZ Clip, our Customer Support Team wants to assist you. Please contact us at: **TheOontZ.com/support** and fill in our customer support form.

Safety and Precautions

1. **When the OontZ Clip speaker is plugged in to a charging source with the USB Type C Charging Cable, never use the speaker in the shower, bath, or near water, to prevent risk of electric shock.**
2. Read and follow all instructions – All operating and use instructions should be followed.
3. Protect the USB Type C Charging Cable from being pinched, particularly at the connectors.
4. Unplug the USB Type C Charging Cable during lightning storms or when unused for long periods of time.
5. Do not place speaker near any heat sources such as radiators, heat registers, stoves, or other apparatus (including amplifiers) that produce heat.
6. Refer all servicing to qualified personnel. Servicing is required when the speaker has been damaged in any way.
7. Do not make alterations to this speaker.
8. The battery in the speaker is not replaceable. Do not attempt to change it.
9. Use this speaker only with an agency approved power supply which meets local regulatory requirements (e.g., UL, CSA, VDE, CCC) in accordance with the manufacturer's specifications.
10. Do not place near naked flame sources, such as lighted candles, on or near the speaker.
11. Do not expose this speaker to excessive heat (e.g. from storage in direct sunlight, fire or the like)
12. If the battery leaks, do not allow the liquid to come in contact with the skin or eyes. If contact is made, seek medical advice.

Safety and Precautions (continued)

This device complies with Part 15 of the FCC Rules. Operation is subject to the following two conditions:
(1) This device may not cause harmful interference, and (2) this device must accept any interference received, including interference that may cause undesired operation.
NOTE 1: This equipment has been tested and found to comply with the limits for a Class B digital device, pursuant to part 15 of the FCC Rules. These limits are designed to provide reasonable protection against harmful interference in a residential installation. This equipment generates, uses and can radiate radio frequency energy and, if not installed and used in accordance with the instructions, may cause harmful interference to radio communications. However, there is no guarantee that interference will not occur in a particular installation. If this equipment does cause harmful interference to radio or television reception, which can be determined by turning the equipment off and on, the user is encouraged to try to correct the interference by one or more of the following measures:
-Reorient or relocate the receiving antenna.
-Increase the separation between the equipment and receiver.
-Connect the equipment into an outlet on a circuit different from that to which the receiver is connected.
-Consult the dealer or an experienced radio/TV technician for help.
NOTE 2: Any changes or modifications to this unit not expressly approved by the party responsible for compliance could void the user's authority to operate the equipment.

Apple, iPhone, iPad, iPod, and Mac are registered trademarks of Apple Inc.
Amazon, Alexa, Amazon Echo and Amazon Echo Dot are registered trademarks of Amazon.com, Inc. Windows is a registered trademark of Microsoft Corporation
Bluetooth is a registered trademark of Bluetooth SIG, Inc
UL is a registered trademark of UL.