YOUNG BOX

WIFI MUSIC RECEIVER

Smargic

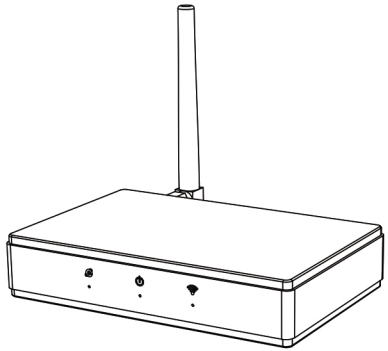

Quick Start Guide

(English/中文)

www.smargic.com

Package Contents

- Young Box
- 5V DC power adapter (optional)
- USB to Micro USB cable for power supply
- 3.5mm to RCA cable
- User Quick Start Guide

Protocol Support

YoungBox is a wireless audio receiver, which supports Apple iOS AirPlay/DLNA/QPlay wireless audio transmission protocols. It turns your traditional docking speakers and HiFi home theater sound systems into a wireless speaker system. You can enjoy your favorite music wirelessly streamed from your smart phone/tablet/laptop/PC.

App Support

iOS

No app is needed, you can stream music directly by Airplay protocol provided by iOS, with simply choosing the Airplay device in the control center. On Apple iOS devices, all the sounds can be streamed to YoungBox even if you are watching a movie.

Android

For Android device, you have to install App to do the work. Some Apps with DLNA function can do it well, such as: Air Buddy, All cast, BubbleUPnP, ShareOn, UPnPlay, iMediaShare etc.

PC

Support iTunes, Windows Media Player and other programs with DLNA functions.

How does YoungBox work?

① Take out the YoungBox and antenna, fix antenna to YoungBox.

② Connect a 5V DC power supply to YoungBox, then YoungBox will automatically start up.

③ Connect YoungBox to a speaker or any other sound equipment by an earphone cable or SPDIF cable.

④ Connect YoungBox by WiFi

(1) Enter setting →WLAN, search WiFi signal(Smargic_xx), choose, then connect.

(2) Internet Connection

1) Enter the console web pages: type IP address " http://192.168.188.1" to the browser on your devices.

2) Enter Internet Connection menu, find your router AP that is able to get access to Internet, choose the AP and enter password, then YoungBox will be able to get access to Internet.

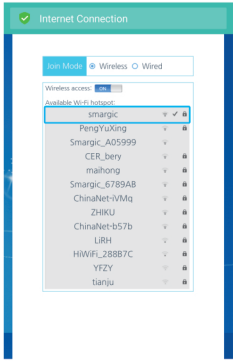

⑤ Network connection mode

(1) Direct connect (Gateway Mode)

1) Smart phone scans WiFi signal, connect to YoungBox, then streaming music.

2) In console web page, setting YoungBox connect to router, can make all the devices which connected to YoungBox be able to get access to Internet, then you can streaming online music.

(2) By router relay (Client mode)

1) Smart phone connects to YoungBox, setting YoungBox connect to router.

1) Disconnect the smart phone from YoungBox, connect smart phone to router, now you can also stream online music.

⑥ How to stream music

(1) iOS Streaming Music

Please refer to the previous connection steps, connect YoungBox correctly. Enter the control center, click "Airplay", choose "smargic" as audio output device. All music of the iOS device can be outputted from YoungBox.

(2) Android Streaming Music

Any app supports DLNA or QPlay protocol can stream music via YoungBox. Now take ShareOn Audio for example to explain how to use.

1) Please refer to the previous connection steps.
2) Download "ShareOn Audio" from the Google Play store.
3) Play a song, the enter the Playing Now page, press the Speaker Icon in the upper right corner, choose "smargic", then music can be outputted from YoungBox.

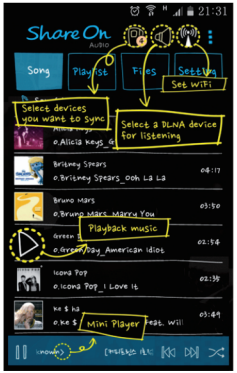

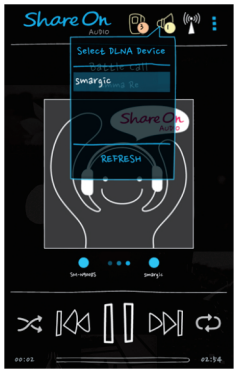

Note: To stream online audio content, it will only work on the condition that those apps support DLNA or Airplay protocol.

Other methods of YoungBox connecting to Internet

① Connect to Internet via WPS

(1) Confirm that the home router has turned on the WPS function.
(2) first press the WPS button on the router, and then click the WPS button of YoungBox (Note: two devices' WPS button press interval should be less than 120 seconds). The network connection indicator of YoungBox will quick flashing, after a successful connection to Internet, the indicator will last on, otherwise the indicator will be off.

② Connect to Internet via wired network

Use the LAN cable to connect home or office router and YoungBox, without any setup can realize wireless Internet access. After a successful connection to Internet, the network connection indicator will last on, otherwise the indicator will be off. If wired and wireless connection both are opened, the wireless network will be ignored.

Indicator	Name	Normal state
	Power indicator	Last on after power on
	WiFi indicator	Flash 3 times after power on, Last on after WiFi function is OK
	Network indicator	Last on after YoungBox connect to Internet

Hardware interface caption

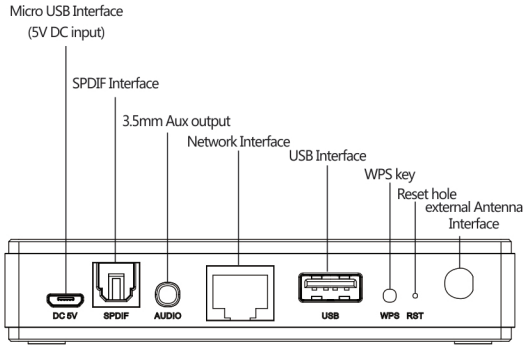

MICRO USB Interface: only used as power supply.

SPDIF Interface: connected to audio equipment with SPDIF Interface.

3.5mm Aux output: lineout output, for connecting to audio equipment.

Network interface: used to connect home router.

USB Interface: used for U disk play and U disk upgrading device's firmware.

WPS key: used to connect to Internet.

Reset key: short press to restart, long press 5 seconds to restore the factory settings.

Product Warranty Clause

Warranty: we guarantee one year warranty from the date of purchase, only if in normal use. If the material or process have obvious defects, or substandard products found in the warranty period, part of the components will be selective maintained or replaced.

Warranty will be void in the following circumstances:

1. this product is not operated under normal conditions or not stored in a conventional environment ;
2. in the absence of manufacturer's written permission, modify part or whole of the products ;
3. products are misused, electrical accident, transport damage, improper packing or natural and force majeure factors, such as (including but not limited to): lightning strikes ;
4. improper installation;
5. product serial number is damaged or lost;

Product maintenance services, please contact the dealer or the retailer you buy products (need to show your purchase receipt or invoice), manufacturers do not accept the end user's direct return or repair.

FCC Statement

This equipment has been tested and found to comply with the limits for a Class B digital device, pursuant to Part 15 of the FCC Rules. These limits are designed to provide reasonable protection against harmful interference in a residential installation. This equipment generates uses and can radiate radio frequency energy and, if not installed and used in accordance with the instructions, may cause harmful interference to radio communications. However, there is no guarantee that interference will not occur in a particular installation. If this equipment does cause harmful interference to radio or television reception, which can be determined by turning the equipment off and on, the user is encouraged to try to correct the interference by one or more of the following measures:

-- Reorient or relocate the receiving antenna.

-- Increase the separation between the equipment and receiver.

-- Connect the equipment into an outlet on a circuit different from that to which the receiver is connected.

-- Consult the dealer or an experienced radio/TV technician for help.

This device complies with part 15 of the FCC Rules. Operation is subject to the following two conditions:(1) This device may not cause harmful interference, and (2) this device must accept any interference received, including interference that may cause undesired operation.

Changes or modifications not expressly approved by the party responsible for compliance could void the user's authority to operate the equipment.

This equipment complies with FCC radiation exposure limits set forth for an uncontrolled environment. This equipment should be installed and operated with minimum distance 20cm between the radiator & your body.