TEST REPORT
FCC Part 27

Report Reference No.....:	HK2207012848-4E
FCC ID.....:	2AGBD-HERO-ME40-02
Compiled by (position+printed name+signature)..:	File administrators Gary Qian
Supervised by (position+printed name+signature)..:	Technique principal Eden Hu
Approved by (position+printed name+signature)..:	Manager Jason Zhou
Date of issue.....:	Jul. 19, 2022
Testing Laboratory Name .....:	**Shenzhen HUAK Testing Technology Co., Ltd.**
Address .....:	1-2/F., Building B2, Junfeng Zhongcheng Zhizao Innovation Park, Heping, Fuhai Street, Bao'an District, Shenzhen, Guangdong, China
Applicant's name.....:	**Howen Technologies Co., Ltd.**
Address .....:	6th Floor, Zone B, Jiada Research & Development Building, Songpingshan Rd, Hi-tech Park North, Nanshan, Shenzhen, Guangdong Province, China
Test specification .....**:**	
Standard.....:	**FCC CFR Title 47 Part 2, Part 27**
TRF Originator.....:	Shenzhen HUAK Testing Technology Co., Ltd.

Shenzhen HUAK Testing Technology Co., Ltd. All rights reserved.

This publication may be reproduced in whole or in part for non-commercial purposes as long as the Shenzhen HUAK Testing Technology Co., Ltd. as copyright owner and source of the material. Shenzhen HUAK Testing Technology Co., Ltd.takess no responsibility for and will not assume liability for damages resulting from the reader's interpretation of the reproduced material due to its placement and context.

Test item description .....:	Dash Camera
Trade Mark .....:	N/A
Manufacturer.....:	**Howen Technologies Co., Ltd.**
Model/Type reference.....:	Hero-ME40-02
Series Models .....:	Please refer to page 2 for Serial models
Modulation Type .....:	QPSK, 16QAM
Rating .....:	DC 12V From Power Box
Hardware version .....:	V2.0
Software version .....:	V2.0
Result.....:	**PASS**

TEST REPORT

Test Report No. :	HK2207012848-4E	Jul. 19, 2022 Date of issue

Equipment under Test	:	Dash Camera
Model /Type	:	Hero-ME40-02
Series Models	:	Hero-MA90-01, Hero-MA90-02, Hero-MA90-03, Hero-MA90-04, Hero-ME40-01, Hero-ME40-02, Hero-ME40-03, Hero-ME40-04, Hero-MC30-01, Hero-MC30-02, Hero-MC30-03, Hero-MC30-04
Model Difference:		All model's the function, software and electric circuit are the same, only with a product model named different. Test sample model: Hero-ME40-02.
Applicant	:	**Howen Technologies Co., Ltd.**
Address	:	6th Floor, Zone B, Jiada Research & Development Building, Songpingshan Rd, Hi-tech Park North, Nanshan, Shenzhen, Guangdong Province, China
Manufacturer	:	**Howen Technologies Co., Ltd.**
Address	:	6th Floor, Zone B, Jiada Research & Development Building, Songpingshan Rd, Hi-tech Park North, Nanshan, Shenzhen, Guangdong Province, China

Test result	**Pass**

The test report merely corresponds to the test sample.
It is not permitted to copy extracts of these test result without the written permission of the test laboratory.

The results shown in this test report refer only to the sample(s) tested unless otherwise stated and the sample(s) are retained for 30 days only. The document is issued by HUAK, this document cannot be reproduced except in full with our prior written permission. The more details and the authenticity of the report will be confirmed at http://www.cer-mark.com.

** Modified History **

Revision	Description	Issued Data	Remark
Revision 1.0	Initial Test Report Release	Jul. 19, 2022	Jason Zhou

The results shown in this test report refer only to the sample(s) tested unless otherwise stated and the sample(s) are retained for 30 days only. The document is issued by HUAK, this document cannot be reproduced except in full with our prior written permission. The more details and the authenticity of the report will be confirmed at http://www.cer-mark.com.

TEL : +86-755 2302 9901 FAX : +86-755 2302 9901 E-mail : service@cer-mark.com
Add: 1-2F., Building B2, Junfeng Zhongcheng Zhizao Innovation Park, Heping Community, Fuhai Street, Bao'an District, Shenzhen, Guangdong, China

Contents

1	SUMMARY	5
1.1	Test Standards	5
1.2	Test Description	5
1.3	Information of The Test Laboratory	6
1.4	Statement of The Measurement Uncertainty	6
2	GENERAL INFORMATION	7
2.1	Environmental Conditions	7
2.2	Description of Test Modes	7
2.3	Test frequency list	7
2.4	Equipments Used During The Test	8
2.5	Related Submittal(s) / Grant (s)	8
2.6	Modifications	8
3	TEST CONDITIONS AND RESULTS	9
3.1	Output Power	9
3.2	Peak-to-Average Ratio (PAR)	14
3.3	Occupied Bandwidth and Emission Bandwidth	21
3.4	Band Edge Compliance	28
3.5	Spurious Emission	35
3.6	Frequency Stability Under Temperature & Voltage Variations	68
4	TEST SETUP PHOTOS OF THE EUT	70
5	PHOTOS OF THE EUT	71

The results shown in this test report refer only to the sample(s) tested unless otherwise stated and the sample(s) are retained for 30 days only. The document is issued by HUAK, this document cannot be reproduced except in full with our prior written permission. The more details and the authenticity of the report will be confirmed at http://www.cer-mark.com.

TEL : +86-755 2302 9901 FAX : +86-755 2302 9901 E-mail : service@cer-mark.com
Add: 1-2F., Building B2, Junfeng Zhongcheng Zhizao Innovation Park, Heping Community, Fuhai Street, Bao'an District, Shenzhen, Guangdong, China

1 SUMMARY

1.1 Test Standards

The tests were performed according to following standards:

FCC Part 27: MISCELLANEOUS WIRELESS COMMUNICATIONS SERVICES.

TIA/EIA 603 D June 2010:Land Mobile FM or PM Communications Equipment Measurement and Performance Standards 47 CFR FCC Part 15 Subpart B: - Unintentional Radiators.

FCC Part 2: FREQUENCY ALLOCA-TIONS AND RADIO TREATY MAT-TERS; GENERAL RULES AND REG-ULATIONS.

KDB971168 D01: v02r02 MEASUREMENT GUIDANCE FOR CERTIFICATION OF LICENSED DIGITAL TRANSMITTERS.

1.2 Test Description

Test Item	Section in CFR 47	Result
RF Output Power	Part 2.1046 Part 27.50(d)(4)	Pass
Peak-to-Average Ratio	Part 27.50(d)(4)	Pass
99% & -26 dB Occupied Bandwidth	Part 2.1049 Part 27.53(h)	Pass
Spurious Emissions at Antenna Terminal	Part 2.1051 Part 27.53(h)	Pass
Field Strength of Spurious Radiation	Part 2.1053 Part 27.53(h)	Pass
Out of band emission, Band Edge	Part 2.1051 Part 27.53(h)	Pass
Frequency stability	Part 2.1055 Part 27.54	Pass

The results shown in this test report refer only to the sample(s) tested unless otherwise stated and the sample(s) are retained for 30 days only. The document is issued by HUAK, this document cannot be reproduced except in full with our prior written permission. The more details and the authenticity of the report will be confirmed at http://www.cer-mark.com.

1.3 Information of The Test Laboratory

Shenzhen HUAK Testing Technology Co., Ltd.
Add.: 1-2/F., Building B2, Junfeng Zhongcheng Zhizao Innovation Park, Heping, Fuhai Street, Bao'an District, Shenzhen, Guangdong, China

Testing Laboratory Authorization：

A2LA Accreditation Code is 4781.01.
FCC Designation Number is CN1229.
Canada IC CAB identifier is CN0045.
CNAS Registration Number is L9589.

1.4 Statement of The Measurement Uncertainty

The data and results referenced in this document are true and accurate. The reader is cautioned that there may be errors within the calibration limits of the equipment and facilities. The measurement uncertainty was calculated for all measurements listed in this test report acc. to CISPR 16 - 4 „Specification for radio disturbance and immunity measuring apparatus and methods – Part 4:Uncertainty in EMC Measurements“ and is documented in the Shenzhen HUAK Testing Technology Co., Ltd.quality system acc. to DIN EN ISO/IEC 17025. Furthermore, component and process variability of devices similar to that tested may result in additional deviation. The manufacturer has the sole responsibility of continued compliance of the device.

Hereafter the best measurement capability for Shenzhen HUAK Testing Technology Co., Ltd.is reported:

Test	Range	Measurement Uncertainty	Notes
Radiated Emission	30~1000MHz	4.10dB	(1)
Radiated Emission	Above 1GHz	4.32dB	(1)
Conducted Disturbance	0.15~30MHz	3.20dB	(1)

(1) This uncertainty represents an expanded uncertainty expressed at approximately the 95% confidence level using a coverage factor of k=2.

The results shown in this test report refer only to the sample(s) tested unless otherwise stated and the sample(s) are retained for 30 days only. The document is issued by HUAK, this document cannot be reproduced except in full with our prior written permission. The more details and the authenticity of the report will be confirmed at http://www.cer-mark.com.

2 GENERAL INFORMATION

2.1 Environmental Conditions

During the measurement the environmental conditions were within the listed ranges:

Normal Temperature:	25°C
Relative Humidity:	55 %
Air Pressure:	101 kPa

2.2 Description of Test Modes

The EUT has been tested under typical operating condition. The CMW500 used to control the EUT staying in continuous transmitting and receiving mode for testing. Regards to the frequency band operation: the lowest、middle and highest frequency of channel were selected to perform the test, then shown on this report.

Note:

1. For the ERP/EIRP and radiated emission test, every axis (X, Y, Z) was verified, and show the worst resulton this report.
2. Test method and refer to 3GPP TS136521.

2.3 Test frequency list

TX Channel Bandwidth	Frequency (MHz)	channel
1.4 MHz	1710.7	19957
	1732.5	20175
	1754.3	20393
3 MHz	1711.5	19965
	1732.5	20175
	1753.5	20385
5 MHz	1712.5	19975
	1732.5	20175
	1752.5	20375
10 MHz	1715.0	20000
	1732.5	20175
	1750.0	20350
15 MHz	1717.5	20025
	1732.5	20175
	1747.5	20325
20 MHz	1720.0	20050
	1732.5	20175
	1745.0	20300

The results shown in this test report refer only to the sample(s) tested unless otherwise stated and the sample(s) are retained for 30 days only. The document is issued by HUAK, this document cannot be reproduced except in full with our prior written permission. The more details and the authenticity of the report will be confirmed at http://www.cer-mark.com.

2.4 Equipments Used During The Test

Test Equipment	Manufacturer	Model No.	Serial No.	Calibration Date	Calibration Due Date
LISN	ENV216	R&S	HKE-059	2022/02/18	2023/02/17
LISN	R&S	ENV216	HKE-002	2022/02/18	2023/02/17
Broadband antenna	Schwarzbeck	VULB 9163	HKE-012	2022/02/18	2023/02/17
Receiver	R&S	ESCI 7	HKE-010	2022/02/18	2023/02/17
Spectrum analyzer	Agilent	N9020A	HKE-048	2022/02/18	2023/02/17
RF automatic control unit	Tonscend	JS0806-2	HKE-060	2022/02/18	2023/02/17
Horn antenna	Schwarzbeck	9120D	HKE-013	2022/02/18	2023/02/17
Loop antenna	Schwarzbeck	FMZB 1519 B	HKE-014	2022/02/18	2023/02/17
Preamplifier	EMCI	EMC051845SE	HKE-015	2022/02/18	2023/02/17
Preamplifier	Agilent	83051A	HKE-016	2022/02/18	2023/02/17
Temperature and humidity meter	Boyang	HTC-1	HKE-075	2022/02/18	2023/02/17
High pass filter unit	Tonscend	JS0806-F	HKE-055	2022/02/18	2023/02/17
RF cable	Times	1-40G	HKE-034	2022/02/18	2023/02/17
Power meter	Agilent	E4419B	HKE-085	2022/02/18	2023/02/17
Power Sensor	Agilent	E9300A	HKE-086	2022/02/18	2023/02/17
Wireless Communication Test Set	R&S	CMU200	HKE-026	2022/02/18	2023/02/17
High gain antenna	Schwarzbeck	LB-180400KF	HKE-054	2022/02/18	2023/02/17
Horn antenna	Schwarzbeck	9120D	HKE-135	2022/02/18	2023/02/17
High gain antenna	Schwarzbeck	LB-180400KF	HKE-128	2022/02/18	2023/02/17
Broadband antenna	Schwarzbeck	VULB 9163	HKE-087	2022/02/18	2023/02/17
Signal generator	Agilent	E4433B	HKE-120	2022/02/18	2023/02/17
Signal generator	Agilent	E4421B	HKE-121	2022/02/18	2023/02/17

2.5 Related Submittal(s) / Grant (s)

This submittal(s) (test report) is intended for FCC ID: 2AGBD-HERO-ME40-02 filing to comply with of the FCC Part 27 Rules.

2.6 Modifications

No modifications were implemented to meet testing criteria.

The results shown in this test report refer only to the sample(s) tested unless otherwise stated and the sample(s) are retained for 30 days only. The document is issued by HUAK, this document cannot be reproduced except in full with our prior written permission. The more details and the authenticity of the report will be confirmed at http://www.cer-mark.com.

3 TEST CONDITIONS AND RESULTS

3.1 Output Power

LIMIT

According to §27.50 (d) (4): Fixed, mobile, and portable (hand- held) stations operating in the 1710–1755 MHz band are limited to 1 watt EIRP.

TEST CONFIGURATION

Conducted Power Measurement

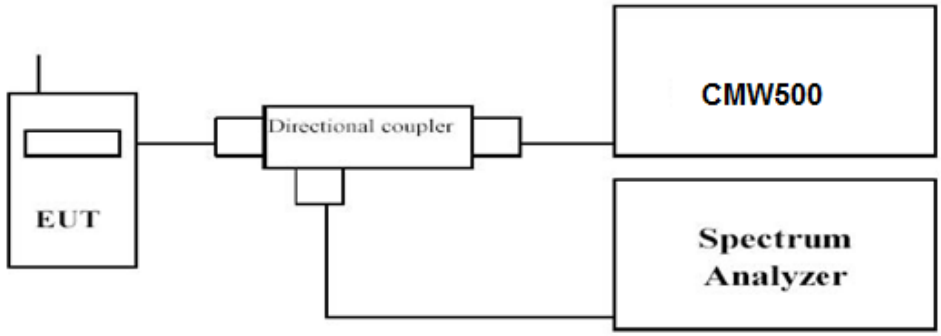

Radiated Power Measurement:

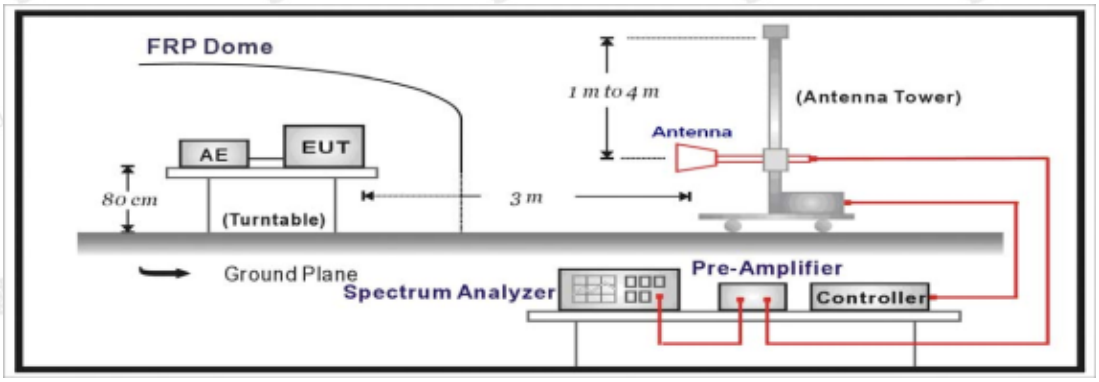

TEST PROCEDURE

The EUT was setup according to EIA/TIA 603D.

Conducted Power Measurement:

a) Place the EUT on a bench and set it in transmitting mode.
b) Connect a low loss RF cable from the antenna port to a spectrum analyzer and CMW500 by a Directional Couple.
c) EUT Communicate with CMW500, then select a channel for testing.
d) Add a correction factor to the display of spectrum, and then test.

Radiated Power Measurement:

a. The EUT shall be placed at the specified height on a support, and in the position closest to normal use as declared by provider.
b. The test antenna shall be oriented initially for vertical polarization and shall be chosen to correspond to thefrequency of the transmitter.
c. The output of the test antenna shall be connected to the measuring receiver.
d. The transmitter shall be switched on and the measuring receiver shall be tuned to the frequency of the transmitter under test.
e. The test antenna shall be raised and lowered through the specified range of height until a maximum signal

The results shown in this test report refer only to the sample(s) tested unless otherwise stated and the sample(s) are retained for 30 days only. The document is issued by HUAK, this document cannot be reproduced except in full with our prior written permission. The more details and the authenticity of the report will be confirmed at http://www.cer-mark.com.

level is detected by the measuring receiver.

f. The transmitter shall then be rotated through 360° in the horizontal plane, until the maximum signal level is detected by the measuring receiver.
g. The test antenna shall be raised and lowered again through the specified range of height until a maximum signal level is detected by the measuring receiver.
h. The maximum signal level detected by the measuring receiver shall be noted.
i. The transmitter shall be replaced by a substitution antenna.
j. The substitution antenna shall be orientated for vertical polarization and the length of the substitution antenna shall be adjusted to correspond to the frequency of the transmitter.
k. The substitution antenna shall be connected to a calibrated signal generator.
l. If necessary, the input attenuator setting of the measuring receiver shall be adjusted in order to increase the sensitivity of the measuring receiver.
m. The test antenna shall be raised and lowered through the specified range of height to ensure that the maximum signal is received.
n. The input signal to the substitution antenna shall be adjusted to the level that produces a level detected by the measuring receiver, that is equal to the level noted while the transmitter radiated power was measured, corrected for the change of input attenuator setting of the measuring receiver.
o. The measurement shall be repeated with the test antenna and the substitution antenna orientated for horizontal polarization.
p. The measure of the effective radiated power is the larger of the two levels recorded at the input to the substitution antenna, corrected for gain of the substitution antenna if necessary.
q. Test site anechoic chamber refer to ANSI C63.4.

TEST RESULTS

Conducted Measurement:

LTE FDD Band 4				
TX Channel Bandwidth	Frequency (MHz)	RB Size/Offset	Average Power [dBm]	
			QPSK	16QAM
1.4 MHz	1710.7	1 RB low	22.65	21.75
		1 RB high	22.55	21.98
		50% RB mid	22.53	21.82
		100% RB	22.56	21.43
	1732.5	1 RB low	21.64	21.42
		1 RB high	22.68	21.09
		50% RB mid	22.87	20.83
		100% RB	22.75	21.86
	1754.3	1 RB low	22.50	22.05
		1 RB high	22.39	21.86
		50% RB mid	22.50	21.48
		100% RB	21.55	21.37
3 MHz	1711.5	1 RB low	22.04	21.05
		1 RB high	22.07	20.98
		50% RB mid	21.91	20.97
		100% RB	21.06	20.27
	1732.5	1 RB low	21.34	20.33
		1 RB high	21.27	20.26
		50% RB mid	21.22	20.12
		100% RB	22.47	21.59
	1753.5	1 RB low	22.51	21.53
		1 RB high	22.53	21.33
		50% RB mid	21.23	20.35
		100% RB	21.31	20.43
5 MHz	1712.	1 RB low	21.36	20.49
		1 RB high	21.21	20.31
		50% RB mid	22.10	20.62
		100% RB	21.68	21.00
	1732.5	1 RB low	21.84	20.92
		1 RB high	20.85	19.88

The results shown in this test report refer only to the sample(s) tested unless otherwise stated and the sample(s) are retained for 30 days only. The document is issued by HUAK, this document cannot be reproduced except in full with our prior written permission. The more details and the authenticity of the report will be confirmed at http://www.cer-mark.com.

		50% RB mid	22.08	20.66
		100% RB	21.98	21.18
	1752.5	1 RB low	22.03	20.29
		1 RB high	21.18	20.25
		50% RB mid	21.13	20.19
		100% RB	20.97	20.11
10 MHz	1715.0	1 RB low	21.05	21.38
		1 RB high	22.36	21.44
		50% RB mid	22.47	21.51
		100% RB	22.51	20.15
	1732.5	1 RB low	21.16	20.04
		1 RB high	21.14	20.36
		50% RB mid	21.28	20.19
		100% RB	21.08	21.24
	1750.0	1 RB low	22.12	20.70
		1 RB high	21.80	20.70
		50% RB mid	21.99	19.98
		100% RB	20.91	19.97
15 MHz	1717.5	1 RB low	20.91	19.87
		1 RB high	21.08	19.98
		50% RB mid	20.88	20.26
		100% RB	21.16	21.03
	1732.5	1 RB low	23.18	22.37
		1 RB high	23.22	22.35
		50% RB mid	23.19	22.32
		100% RB	22.34	21.39
	1747.5	1 RB low	22.16	20.10
		1 RB high	22.30	20.02
		50% RB mid	22.07	20.34
		100% RB	21.23	20.26
20 MHz	1720.0	1 RB low	21.25	21.20
		1 RB high	21.19	22.62
		50% RB mid	21.18	21.63
		100% RB	22.05	20.72
	1732.5	1 RB low	22.46	20.68
		1 RB high	22.92	20.67
		50% RB mid	21.75	20.53
		100% RB	21.71	21.21
	1745.0	1 RB low	21.69	21.18
		1 RB high	21.46	21.33
		50% RB mid	22.15	20.22
		100% RB	22.24	20.10

The results shown in this test report refer only to the sample(s) tested unless otherwise stated and the sample(s) are retained for 30 days only. The document is issued by HUAK, this document cannot be reproduced except in full with our prior written permission. The more details and the authenticity of the report will be confirmed at http://www.cer-mark.com.

TEL：+86-755 2302 9901 FAX ：+86-755 2302 9901 E-mail：service@cer-mark.com
Add: 1-2F., Building B2, Junfeng Zhongcheng Zhizao Innovation Park, Heping Community, Fuhai Street, Bao'an District, Shenzhen, Guangdong, China

Radiated Measurement

Remark:

1. *We were tested all RB Configuration refer 3GPP TS136 521 for each Channel Bandwidth of LTE FDD Band 4; recorded worst case for each Channel Bandwidth of LTE FDD Band 4.*
2. *EIRP=P_{Mea}(dBm)-P_{cl}(dB)+P_{Ag}(dB)+G_a(dBi)*

LTE FDD Band 4_Channel Bandwidth 1.4MHz_QPSK

Frequency (MHz)	P_{Mea} (dBm)	P_{cl} (dB)	G_a Antenna Gain(dB)	P_{Ag} (dB)	EIRP (dBm)	Limit (dBm)	Margin (dB)	Polarization
1710.7	-16.46	3.06	9.68	34.80	24.96	30.00	5.04	V
1732.5	-16.24	3.17	9.68	34.80	25.07	30.00	4.93	V
1754.3	-15.64	3.22	9.75	34.80	25.69	30.00	4.31	V

LTE FDD Band 4_Channel Bandwidth 3MHz_QPSK

Frequency (MHz)	P_{Mea} (dBm)	P_{cl} (dB)	G_a Antenna Gain(dB)	P_{Ag} (dB)	EIRP (dBm)	Limit (dBm)	Margin (dB)	Polarization
1711.5	-15.57	3.06	9.68	34.80	25.85	30.00	4.15	V
1732.5	-15.01	3.17	9.68	34.80	26.30	30.00	3.70	V
1753.5	-16.18	3.22	9.75	34.80	25.15	30.00	4.85	V

LTE FDD Band 4_Channel Bandwidth 5MHz_QPSK

Frequency (MHz)	P_{Mea} (dBm)	P_{cl} (dB)	G_a Antenna Gain(dB)	P_{Ag} (dB)	EIRP (dBm)	Limit (dBm)	Margin (dB)	Polarization
1712.5	-16.67	3.06	9.68	34.80	24.75	30.00	5.25	V
1732.5	-16.01	3.17	9.68	34.80	25.30	30.00	4.70	V
1752.5	-16.18	3.22	9.75	34.80	25.15	30.00	4.85	V

LTE FDD Band 4_Channel Bandwidth 10MHz_QPSK

Frequency (MHz)	P_{Mea} (dBm)	P_{cl} (dB)	G_a Antenna Gain(dB)	P_{Ag} (dB)	EIRP (dBm)	Limit (dBm)	Margin (dB)	Polarization
1715.0	-15.77	3.06	9.68	34.80	25.65	30.00	4.35	V
1732.5	-16.02	3.17	9.68	34.80	25.29	30.00	4.71	V
1750.0	-15.18	3.22	9.75	34.80	26.15	30.00	3.85	V

LTE FDD Band 4_Channel Bandwidth 15MHz_QPSK

Frequency (MHz)	P_{Mea} (dBm)	P_{cl} (dB)	G_a Antenna Gain(dB)	P_{Ag} (dB)	EIRP (dBm)	Limit (dBm)	Margin (dB)	Polarization
1717.5	-16.71	3.06	9.68	34.80	24.71	30.00	5.29	V
1732.5	-16.08	3.17	9.68	34.80	25.23	30.00	4.77	V
1747.5	-16.27	3.22	9.75	34.80	25.06	30.00	4.94	V

LTE FDD Band 4_Channel Bandwidth 20MHz_QPSK

Frequency (MHz)	P_{Mea} (dBm)	P_{cl} (dB)	G_a Antenna Gain(dB)	P_{Ag} (dB)	EIRP (dBm)	Limit (dBm)	Margin (dB)	Polarization
1720.0	-15.85	3.06	9.68	34.80	25.57	30.00	4.43	V
1732.5	-14.36	3.17	9.68	34.80	26.95	30.00	3.05	V
1745.0	-16.18	3.22	9.75	34.80	25.15	30.00	4.85	V

The results shown in this test report refer only to the sample(s) tested unless otherwise stated and the sample(s) are retained for 30 days only. The document is issued by HUAK, this document cannot be reproduced except in full with our prior written permission. The more details and the authenticity of the report will be confirmed at http://www.cer-mark.com.

LTE FDD Band 4_Channel Bandwidth 1.4MHz_16QAM

Frequency (MHz)	P_{Mea} (dBm)	P_{cl} (dB)	G_a Antenna Gain(dB)	P_{Ag} (dB)	EIRP (dBm)	Limit (dBm)	Margin (dB)	Polarization
1710.7	-16.12	3.06	9.68	34.80	25.30	30.00	4.70	V
1732.5	-15.97	3.17	9.68	34.80	25.34	30.00	4.66	V
1754.3	-15.44	3.22	9.75	34.80	25.89	30.00	4.11	V

LTE FDD Band 4_Channel Bandwidth 3MHz_16QAM

Frequency (MHz)	P_{Mea} (dBm)	P_{cl} (dB)	G_a Antenna Gain(dB)	P_{Ag} (dB)	EIRP (dBm)	Limit (dBm)	Margin (dB)	Polarization
1711.5	-16.04	3.06	9.68	34.80	25.38	30.00	4.62	V
1732.5	-15.16	3.17	9.68	34.80	26.15	30.00	3.85	V
1753.5	-15.92	3.22	9.75	34.80	25.41	30.00	4.59	V

LTE FDD Band 4_Channel Bandwidth 5MHz_16QAM

Frequency (MHz)	P_{Mea} (dBm)	P_{cl} (dB)	G_a Antenna Gain(dB)	P_{Ag} (dB)	EIRP (dBm)	Limit (dBm)	Margin (dB)	Polarization
1712.5	-15.61	3.06	9.68	34.80	25.81	30.00	4.19	V
1732.5	-15.61	3.17	9.68	34.80	25.70	30.00	4.30	V
1752.5	-16.43	3.22	9.75	34.80	24.90	30.00	5.10	V

LTE FDD Band 4_Channel Bandwidth 10MHz_16QAM

Frequency (MHz)	P_{Mea} (dBm)	P_{cl} (dB)	G_a Antenna Gain(dB)	P_{Ag} (dB)	EIRP (dBm)	Limit (dBm)	Margin (dB)	Polarization
1715.0	-15.71	3.06	9.68	34.80	25.71	30.00	4.29	V
1732.5	-15.18	3.17	9.68	34.80	26.13	30.00	3.87	V
1750.0	-16.09	3.22	9.75	34.80	25.24	30.00	4.76	V

LTE FDD Band 4_Channel Bandwidth 15MHz_16QAM

Frequency (MHz)	P_{Mea} (dBm)	P_{cl} (dB)	G_a Antenna Gain(dB)	P_{Ag} (dB)	EIRP (dBm)	Limit (dBm)	Margin (dB)	Polarization
1717.5	-16.42	3.06	9.68	34.80	25.00	30.00	5.00	V
1732.5	-16.59	3.17	9.68	34.80	24.72	30.00	5.28	V
1747.5	-14.99	3.22	9.75	34.80	26.34	30.00	3.66	V

LTE FDD Band 4_Channel Bandwidth 20MHz_16QAM

Frequency (MHz)	P_{Mea} (dBm)	P_{cl} (dB)	G_a Antenna Gain(dB)	P_{Ag} (dB)	EIRP (dBm)	Limit (dBm)	Margin (dB)	Polarization
1720.0	-16.43	3.06	9.68	34.80	24.99	30.00	5.01	V
1732.5	-15.31	3.17	9.68	34.80	26.00	30.00	4.00	V
1745.0	-15.08	3.22	9.75	34.80	26.25	30.00	3.75	V

The results shown in this test report refer only to the sample(s) tested unless otherwise stated and the sample(s) are retained for 30 days only. The document is issued by HUAK, this document cannot be reproduced except in full with our prior written permission. The more details and the authenticity of the report will be confirmed at http://www.cer-mark.com.

3.2 Peak-to-Average Ratio (PAR)

LIMIT

The Peak-to-Average Ratio (PAR) of the transmission may not exceed 13 dB.

TEST CONFIGURATION

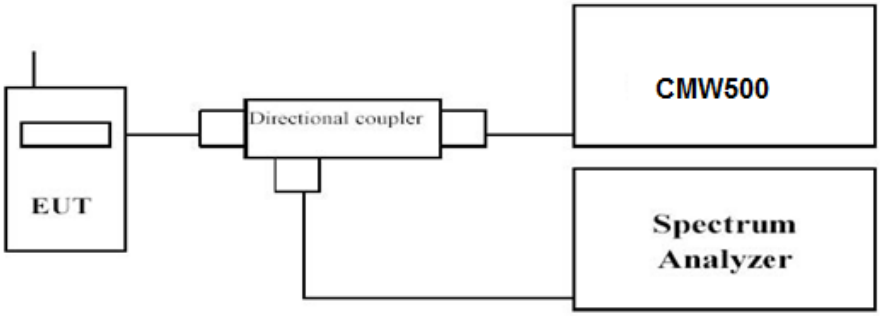

TEST PROCEDURE

1. Refer to instrument's analyzer instruction manual for details on how to use the power statistics/CCDF function;
2. Set resolution/measurement bandwidth ≥ signal's occupied bandwidth;
3. Set the number of counts to a value that stabilizes the measured CCDF curve;
4. Set the measurement interval as follows:
   1). for continuous transmissions, set to 1 ms;
   2). for burst transmissions, employ an external trigger that is synchronized with the EUT burst timing sequence, or use the internal burst trigger with a trigger level that allows the burst to stabilize and set the measurement interval to a time that is less than or equal to the burst duration.
5. Record the maximum PAPR level associated with a probability of 0.1%.

TEST RESULTS

Remark:

1. *We were tested all RB Configuration refer 3GPP TS136 521 for each Channel Bandwidth of LTE FDD Band 4; recorded worst case for each Channel Bandwidth of LTE FDD Band 4.*

LTE FDD Band 4				
TX Channel Bandwidth	Frequency (MHz)	RB Size/Offset	PAPR (dB)	
			QPSK	16QAM
1.4 MHz	1710.7	*1RB#0*	3.93	4.86
	1732.5		4.70	5.71
	1754.3		4.52	5.34
3 MHz	1711.5	*1RB#0*	3.99	4.87
	1732.5		4.71	5.53
	1753.5		4.54	5.41
5 MHz	1712.5	*1RB#0*	3.98	4.78
	1732.5		4.68	5.57
	1752.5		4.47	5.22
10 MHz	1715.0	*1RB#0*	3.98	4.77
	1732.5		4.63	5.52
	1750.0		4.56	5.44
15 MHz	1717.5	*1RB#0*	4.06	4.97
	1732.5		4.50	5.32
	1747.5		4.64	5.62
20 MHz	1720.0	*1RB#0*	3.93	4.80
	1732.5		4.24	5.13
	1745.0		4.69	5.49

The results shown in this test report refer only to the sample(s) tested unless otherwise stated and the sample(s) are retained for 30 days only. The document is issued by HUAK, this document cannot be reproduced except in full with our prior written permission. The more details and the authenticity of the report will be confirmed at http://www.cer-mark.com.

LTE FDD Band 4-1.4MHz Channel Bandwidth PAPR

QPSK	*16QAM*
1RB#0	*1RB#0*

Low Channel

1RB#0	*1RB#0*

Middle Channel

1RB#0	*1RB#0*

High Channel

The results shown in this test report refer only to the sample(s) tested unless otherwise stated and the sample(s) are retained for 30 days only. The document is issued by HUAK, this document cannot be reproduced except in full with our prior written permission. The more details and the authenticity of the report will be confirmed at http://www.cer-mark.com.

TEL：+86-755 2302 9901 FAX ：+86-755 2302 9901 E-mail：service@cer-mark.com
Add: 1-2F., Building B2, Junfeng Zhongcheng Zhizao Innovation Park, Heping Community, Fuhai Street, Bao'an District, Shenzhen, Guangdong, China

LTE FDD Band 4-3MHz Channel Bandwidth PAPR	
QPSK	16QAM
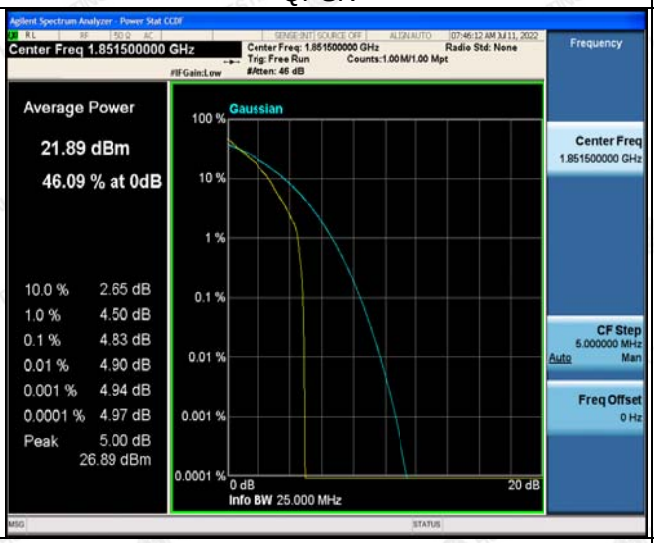	
1RB#0	1RB#0
Low Channel	
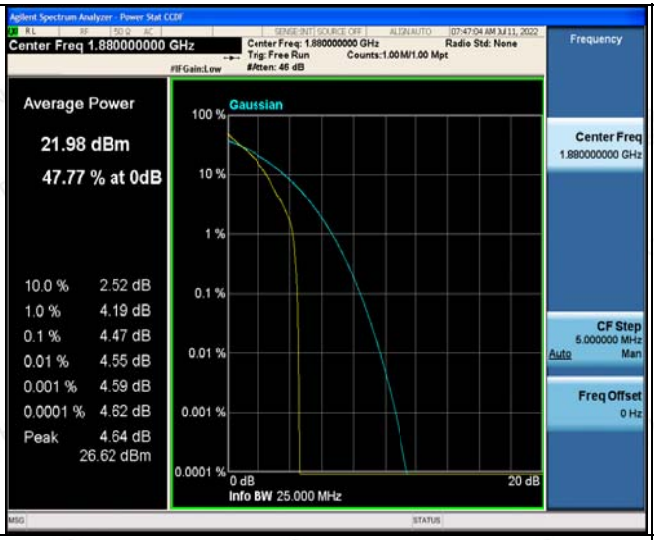	
1RB#0	1RB#0
Middle Channel	
1RB#0	1RB#0
High Channel	

The results shown in this test report refer only to the sample(s) tested unless otherwise stated and the sample(s) are retained for 30 days only. The document is issued by HUAK, this document cannot be reproduced except in full with our prior written permission. The more details and the authenticity of the report will be confirmed at http://www.cer-mark.com.

LTE FDD Band 4-5MHz Channel Bandwidth PAPR	
QPSK	16QAM
1RB#0	1RB#0
Low Channel	
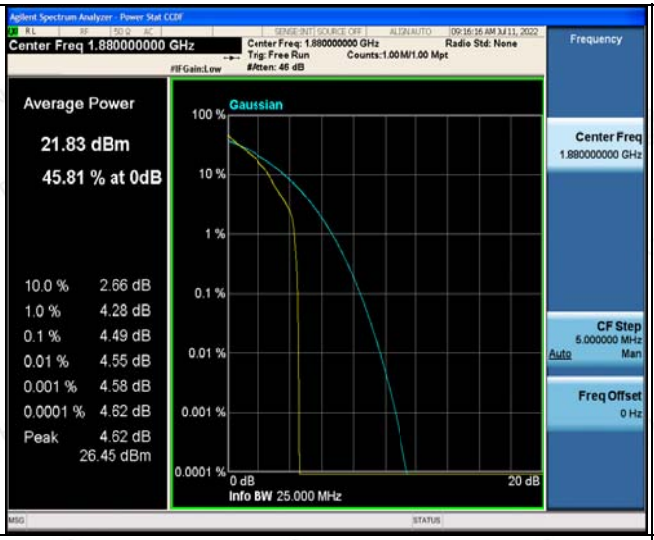	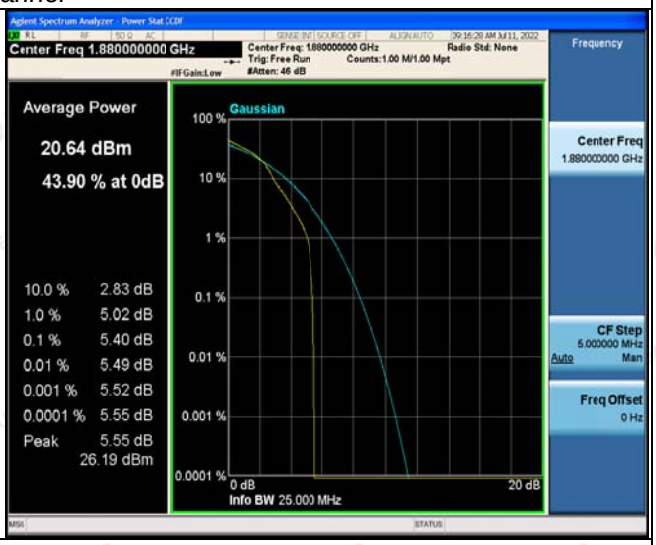
1RB#0	1RB#0
Middle Channel	
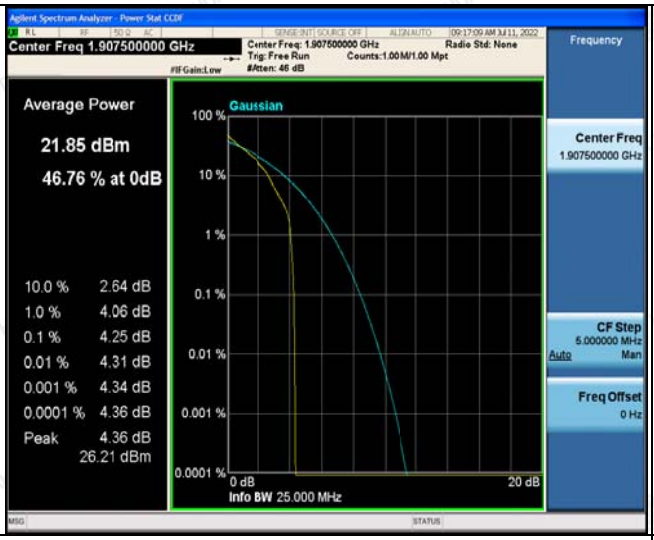	
1RB#0	1RB#0
High Channel	

The results shown in this test report refer only to the sample(s) tested unless otherwise stated and the sample(s) are retained for 30 days only. The document is issued by HUAK, this document cannot be reproduced except in full with our prior written permission. The more details and the authenticity of the report will be confirmed at http://www.cer-mark.com.

LTE FDD Band 4-10MHz Channel Bandwidth PAPR	
QPSK	16QAM
1RB#0	1RB#0
Low Channel	
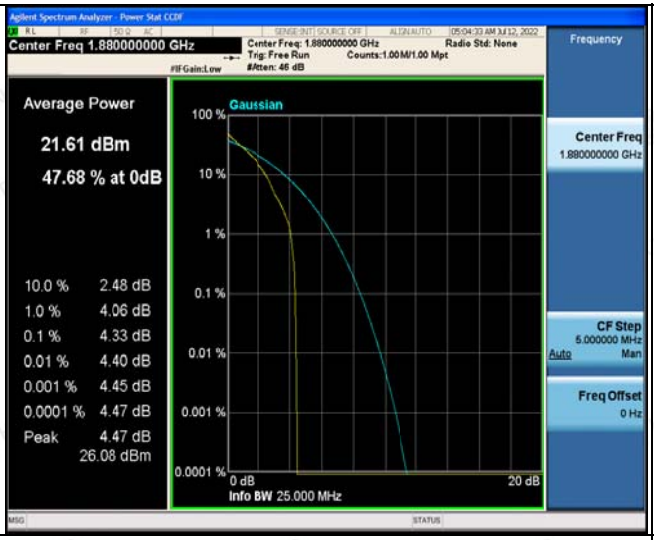	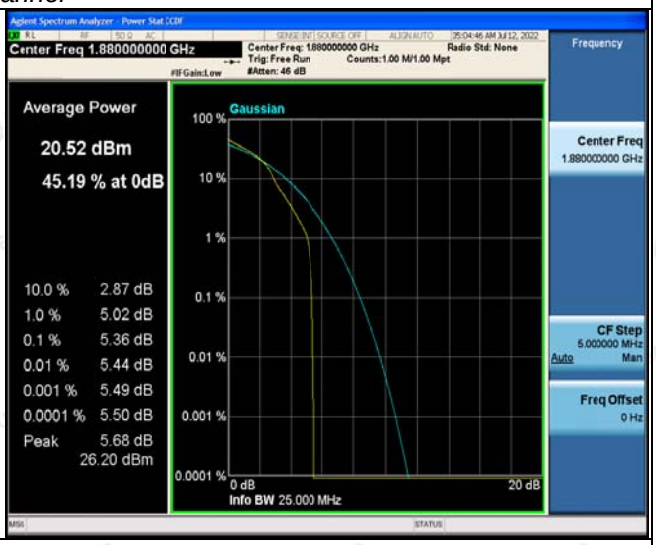
1RB#0	1RB#0
Middle Channel	
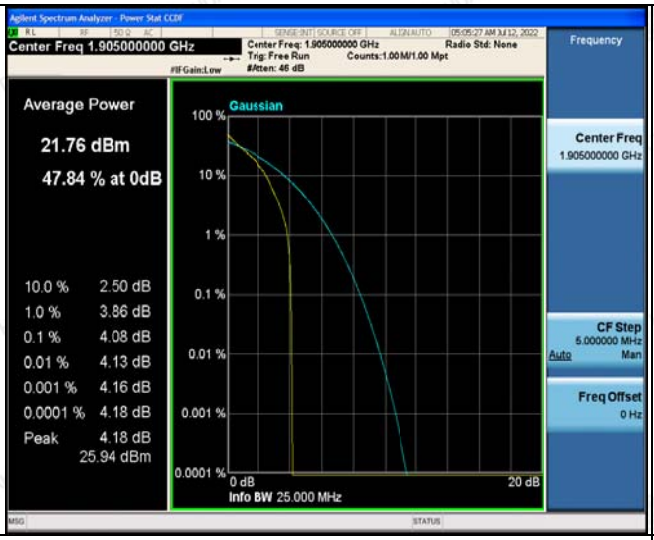	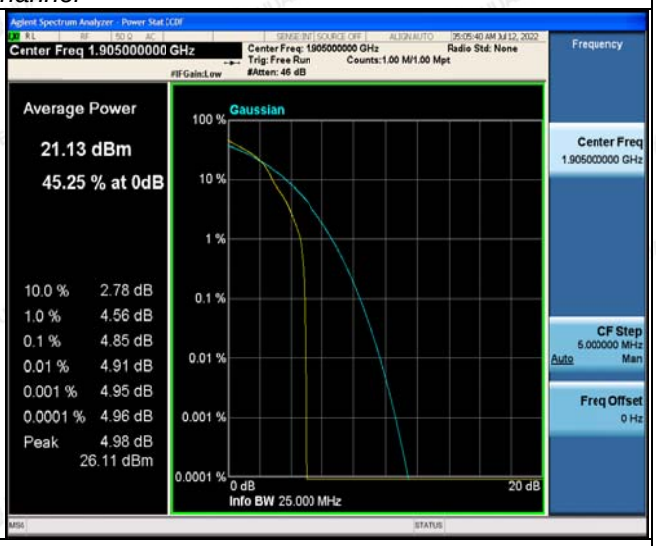
1RB#0	1RB#0
High Channel	

The results shown in this test report refer only to the sample(s) tested unless otherwise stated and the sample(s) are retained for 30 days only. The document is issued by HUAK, this document cannot be reproduced except in full with our prior written permission. The more details and the authenticity of the report will be confirmed at http://www.cer-mark.com.

LTE FDD Band 4-15MHz Channel Bandwidth PAPR	
QPSK	16QAM
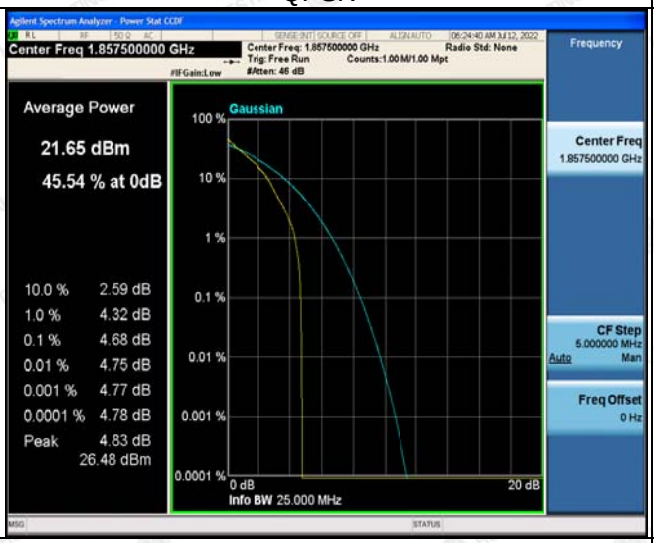	
1RB#0	1RB#0
Low Channel	
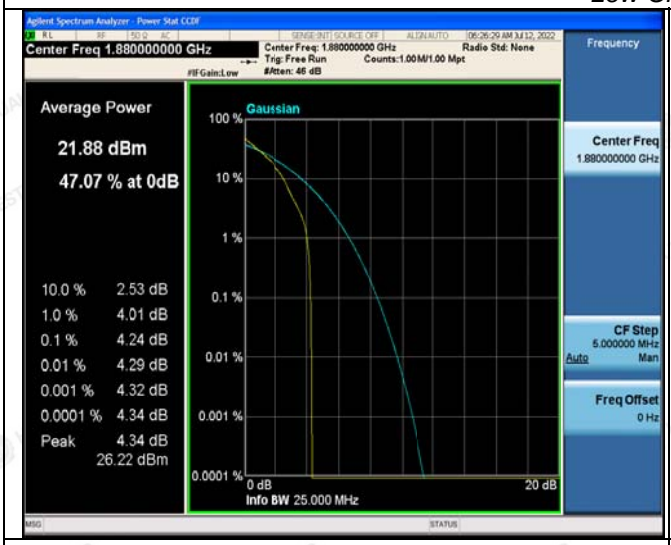	
1RB#0	1RB#0
Middle Channel	
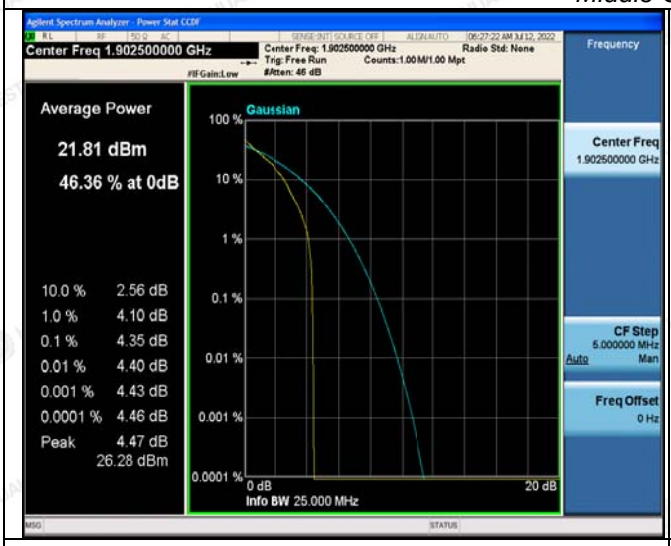	
1RB#0	1RB#0
High Channel	

The results shown in this test report refer only to the sample(s) tested unless otherwise stated and the sample(s) are retained for 30 days only. The document is issued by HUAK, this document cannot be reproduced except in full with our prior written permission. The more details and the authenticity of the report will be confirmed at http://www.cer-mark.com.

LTE FDD Band 4-20MHz Channel Bandwidth PAPR

QPSK	*16QAM*
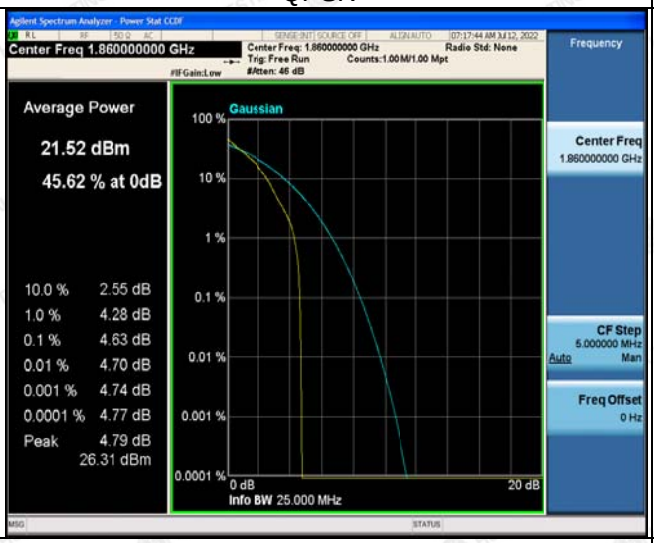	
1RB#0	*1RB#0*
Low Channel	
1RB#0	*1RB#0*
Middle Channel	
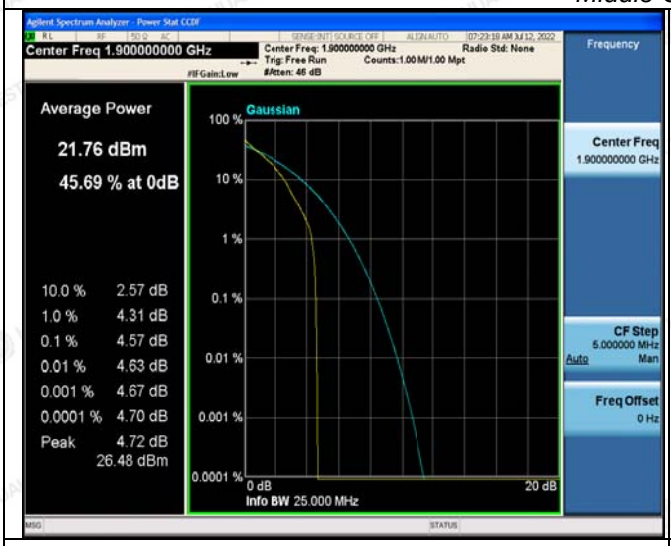	
1RB#0	*1RB#0*
High Channel	

The results shown in this test report refer only to the sample(s) tested unless otherwise stated and the sample(s) are retained for 30 days only. The document is issued by HUAK, this document cannot be reproduced except in full with our prior written permission. The more details and the authenticity of the report will be confirmed at http://www.cer-mark.com.

3.3 Occupied Bandwidth and Emission Bandwidth

LIMIT

N/A

TEST CONFIGURATION

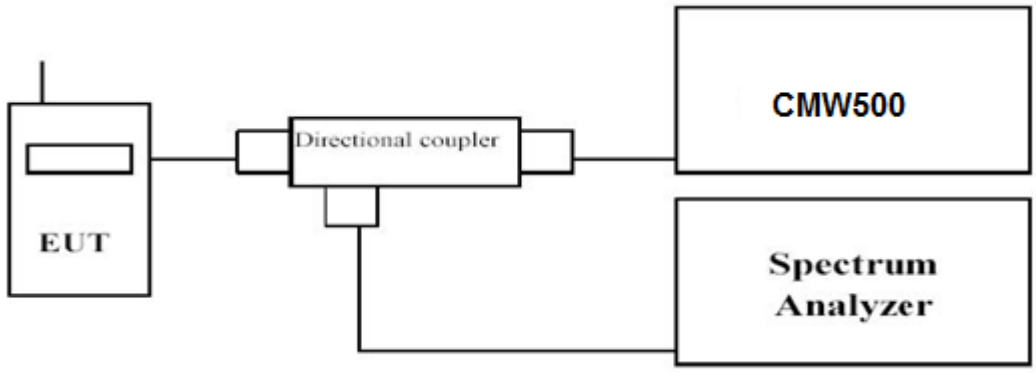

TEST PROCEDURE

The transmitter output was connected to a calibrated coaxial cable and coupler, the other end of which was connected to a spectrum analyzer. The occupied bandwidth was measured with the spectrum analyzer at low, middle and high channel in each band. The -26dBc Emission bandwidth was also measured and recorded. Set RBW was set to about 1% of emission BW, VBW≥3 times RBW.
-26dBc display line was placed on the screen (or 99% bandwidth), the occupied bandwidth is the delta frequency between the two points where the display line intersects the signal trace.

TEST RESULTS

Remark:

1. *We were tested all RB Configuration refer 3GPP TS136 521 for each Channel Bandwidth of LTE FDD Band 4; recorded worst case for each Channel Bandwidth of LTE FDD Band 4.*

LTE FDD Band 4						
TX Channel Bandwidth	RB Size/Offset	Frequency (MHz)	-26dBc Emission bandwidth (MHz)		99% Occupied bandwidth (MHz)	
			QPSK	16QAM	QPSK	16QAM
1.4 MHz	*6RB#0*	1710.7	1.309	1.319	1.0940	1.1011
		1732.5	1.295	1.302	1.0946	1.1033
		1754.3	1.291	1.292	1.1016	1.0971
3 MHz	*15RB#0*	1711.5	2.964	2.991	2.7022	2.7027
		1732.5	2.947	2.988	2.7005	2.7008
		1753.5	2.987	2.986	2.7038	2.6939
5 MHz	*25RB#0*	1712.5	5.023	5.001	4.5197	4.5016
		1732.5	5.025	4.999	4.5188	4.5036
		1752.5	5.011	5.038	4.4984	4.5141
10 MHz	*50RB#0*	1715.0	9.877	9.839	8.9705	8.9780
		1732.5	9.906	20.00	8.9758	19.840
		1750.0	9.906	9.828	8.9609	8.9700
15 MHz	*75RB#0*	1717.5	14.74	14.63	13.439	13.430
		1732.5	14.83	14.71	13.482	13.463
		1747.5	14.72	14.73	13.432	13.445
20 MHz	*100RB#0*	1720.0	19.44	19.48	17.905	17.914
		1732.5	19.41	19.49	17.935	17.972
		1745.0	19.48	19.41	17.901	17.866

The results shown in this test report refer only to the sample(s) tested unless otherwise stated and the sample(s) are retained for 30 days only. The document is issued by HUAK, this document cannot be reproduced except in full with our prior written permission. The more details and the authenticity of the report will be confirmed at http://www.cer-mark.com.

LTE FDD Band 4-1.4MHz Channel Bandwidth	
QPSK	16QAM
6RB#0	6RB#0
Low Channel	
6RB#0	6RB#0
Middle Channel	
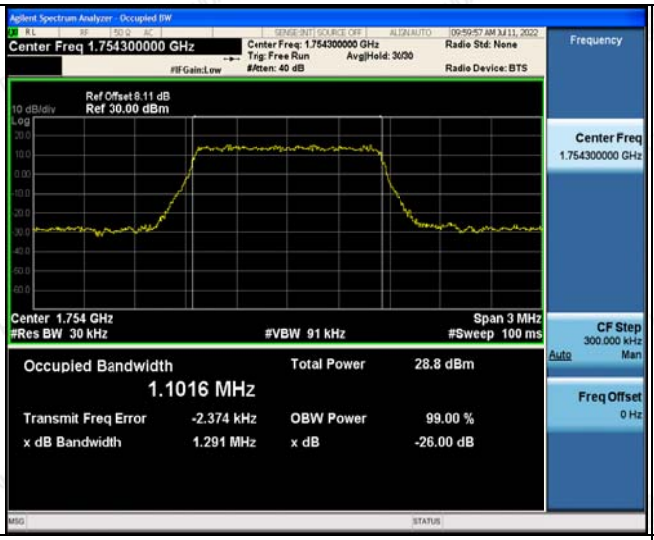	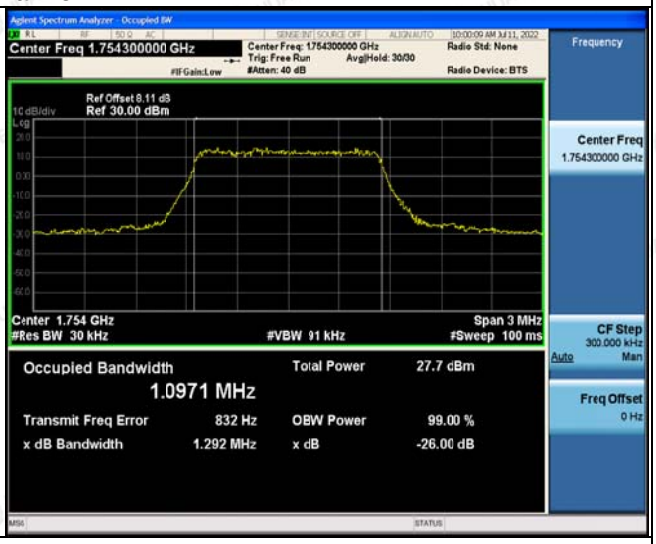
6RB#0	6RB#0
High Channel	

The results shown in this test report refer only to the sample(s) tested unless otherwise stated and the sample(s) are retained for 30 days only. The document is issued by HUAK, this document cannot be reproduced except in full with our prior written permission. The more details and the authenticity of the report will be confirmed at http://www.cer-mark.com.

LTE FDD Band 4-3MHz Channel Bandwidth

QPSK	*16QAM*
	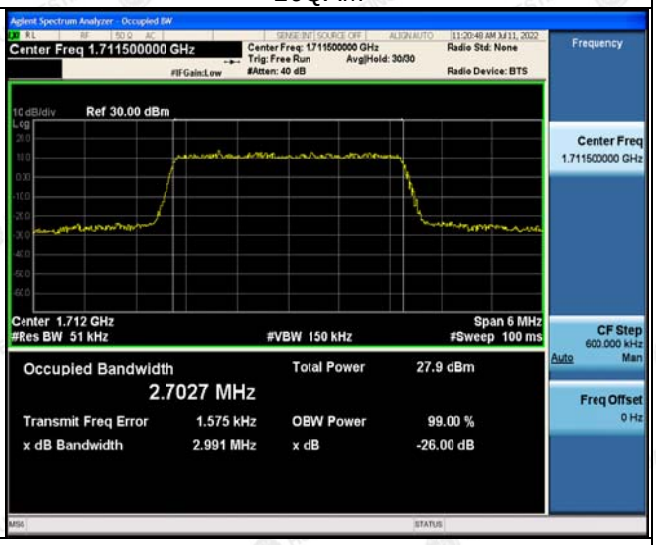
15RB#0	*15RB#0*

Low Channel

15RB#0	*15RB#0*

Middle Channel

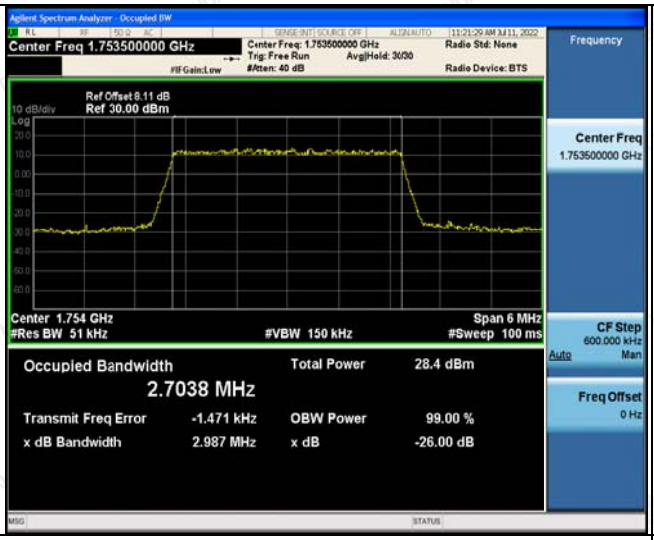	
15RB#0	*15RB#0*

High Channel

The results shown in this test report refer only to the sample(s) tested unless otherwise stated and the sample(s) are retained for 30 days only. The document is issued by HUAK, this document cannot be reproduced except in full with our prior written permission. The more details and the authenticity of the report will be confirmed at http://www.cer-mark.com.

LTE FDD Band 4-5MHz Channel Bandwidth

QPSK	*16QAM*
25RB#0	*25RB#0*

Low Channel

25RB#0	*25RB#0*

Middle Channel

25RB#0	*25RB#0*

High Channel

The results shown in this test report refer only to the sample(s) tested unless otherwise stated and the sample(s) are retained for 30 days only. The document is issued by HUAK, this document cannot be reproduced except in full with our prior written permission. The more details and the authenticity of the report will be confirmed at http://www.cer-mark.com.

LTE FDD Band 4-10MHz Channel Bandwidth

QPSK	*16QAM*
50RB#0	*50RB#0*

Low Channel

	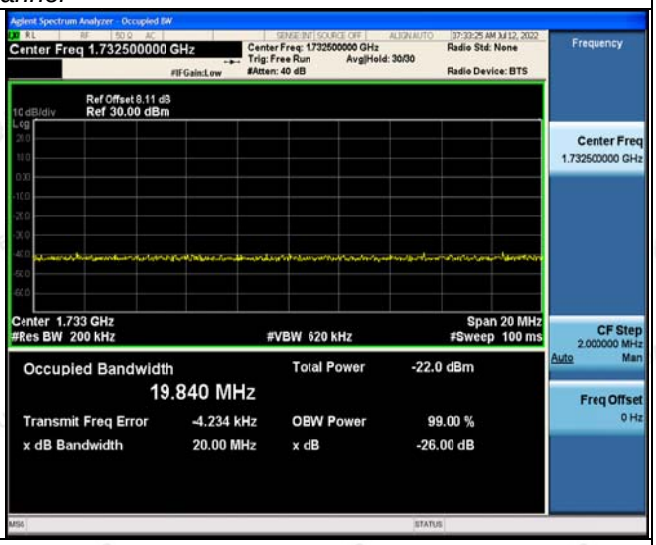
50RB#0	*50RB#0*

Middle Channel

50RB#0	*50RB#0*

High Channel

The results shown in this test report refer only to the sample(s) tested unless otherwise stated and the sample(s) are retained for 30 days only. The document is issued by HUAK, this document cannot be reproduced except in full with our prior written permission. The more details and the authenticity of the report will be confirmed at http://www.cer-mark.com.

LTE FDD Band 4-15MHz Channel Bandwidth

QPSK	*16QAM*
75RB#0	*75RB#0*

Low Channel

75RB#0	*75RB#0*

Middle Channel

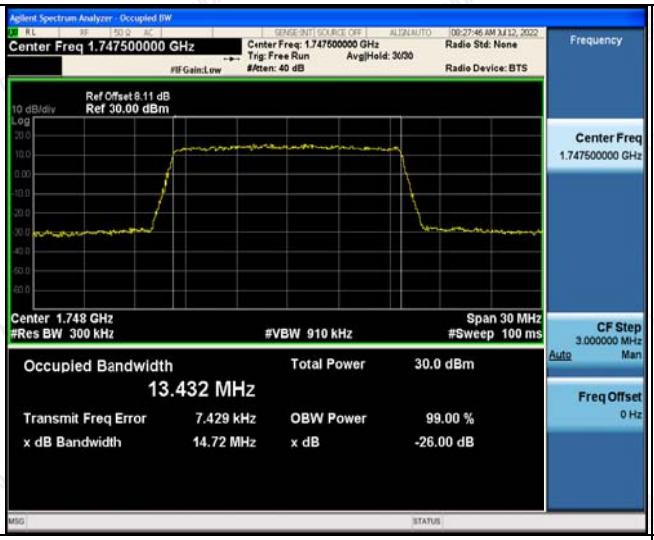	
75RB#0	*75RB#0*

High Channel

The results shown in this test report refer only to the sample(s) tested unless otherwise stated and the sample(s) are retained for 30 days only. The document is issued by HUAK, this document cannot be reproduced except in full with our prior written permission. The more details and the authenticity of the report will be confirmed at http://www.cer-mark.com.

LTE FDD Band 4-20MHz Channel Bandwidth

QPSK	*16QAM*
100RB#0	*100RB#0*

Low Channel

100RB#0	*100RB#0*

Middle Channel

100RB#0	*100RB#0*

High Channel

The results shown in this test report refer only to the sample(s) tested unless otherwise stated and the sample(s) are retained for 30 days only. The document is issued by HUAK, this document cannot be reproduced except in full with our prior written permission. The more details and the authenticity of the report will be confirmed at http://www.cer-mark.com.

3.4 Band Edge Compliance

LIMIT

According to §27.53 (h): For operations in the 1710–1755 MHz and 2110–2155 MHz bands, the power of any emission outside a licensee's frequency block shall be attenuated below the transmitter power (P) by at least 43 + 10 log10(P) dB.

TEST CONFIGURATION

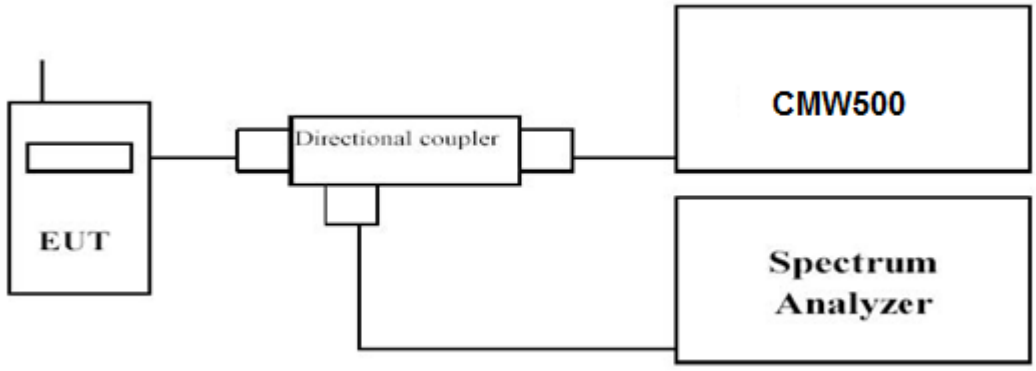

TEST PROCEDURE

1. The transmitter output port was connected to base station.
2. The RF output of EUT was connected to the power meter by RF cable and attenuator, the path loss was compensated to the results for each measurement.
3. Set EUT at maximum power through base station.
4. Select lowest and highest channels for each band and different modulation.
5. Measure Band edge using RMS (Average) detector by spectrum.

TEST RESULTS

Remark:

1. *We were tested all RB Configuration refer 3GPP TS136 521 for each Channel Bandwidth of LTE FDD Band 4; recorded worst case for each Channel Bandwidth of LTE FDD Band 4.*

The results shown in this test report refer only to the sample(s) tested unless otherwise stated and the sample(s) are retained for 30 days only. The document is issued by HUAK, this document cannot be reproduced except in full with our prior written permission. The more details and the authenticity of the report will be confirmed at http://www.cer-mark.com.

LTE FDD Band 4-1.4MHz Channel Bandwidth Band Edge Compliance	
QPSK	16QAM
6RB#0	6RB#0
Low Channel	
6RB#0	6RB#0
High Channel	

The results shown in this test report refer only to the sample(s) tested unless otherwise stated and the sample(s) are retained for 30 days only. The document is issued by HUAK, this document cannot be reproduced except in full with our prior written permission. The more details and the authenticity of the report will be confirmed at http://www.cer-mark.com.

LTE FDD Band 4-3MHz Channel Bandwidth Band Edge Compliance	
QPSK	16QAM
15RB#0	15RB#0
Low Channel	
15RB#0	15RB#0
High Channel	

The results shown in this test report refer only to the sample(s) tested unless otherwise stated and the sample(s) are retained for 30 days only. The document is issued by HUAK, this document cannot be reproduced except in full with our prior written permission. The more details and the authenticity of the report will be confirmed at http://www.cer-mark.com.