FCC PART 22 TEST REPORT

Part 22H Subpart E

Report Reference No. ..... : HK2207012848-5E

FCC ID. ..... : 2AGBD-HERO-ME40-02

Compiled by
(position+printedname+signature).. : File administrators Gary Qian

Supervised by
(position+printedname+signature)... : Technique principal Eden Hu

Approved by
(position+printedname+signature)... : ManagerJason Zhou

Date of issue ..... : Jul. 19, 2022

Testing Laboratory Name ..... :	**Shenzhen HUAK Testing Technology Co., Ltd.**
Address ..... :	1-2/F., Building B2, Junfeng Zhongcheng Zhizao Innovation Park, Heping, Fuhai Street, Bao'an District, Shenzhen, Guangdong, China
Applicant's name ..... :	**Howen Technologies Co., Ltd.**
Address ..... :	6th Floor, Zone B, Jiada Research & Development Building, Songpingshan Rd, Hi-tech Park North, Nanshan, Shenzhen, Guangdong Province, China
Test specification ..... :	
Standard ..... :	**FCC CFR Title 47 Part 2, Part 22H**
TRF Originator ..... :	Shenzhen HUAK Testing Technology Co., Ltd.

Shenzhen HUAK Testing Technology Co., Ltd.All rights reserved.

This publication may be reproduced in whole or in part for non-commercial purposes as long as the Shenzhen HUAK Testing Technology Co., Ltd.as copyright owner and source of the material. Shenzhen HUAK Testing Technology Co., Ltd.takess no responsibility for and will not assume liability for damages resulting from the reader's interpretation of the reproduced material due to its placement and context.

Test item description ..... :	Dash Camera
Trade Mark ..... :	N/A
Manufacturer ..... :	**Howen Technologies Co., Ltd.**
Model/Type reference ..... :	Hero-ME40-02
Series Models ..... :	Please refer to page 6 for Serial models
Modulation Type ..... :	QPSK,16QAM
Rating ..... :	DC 12V From Power Box
Hardware version ..... :	V2.0
Software version ..... :	V2.0
Result ..... :	**PASS**

TEST REPORT

Test Report No. :	HK2207012848-5E	Jul. 19, 2022 Date of issue

Equipment under Test	:	Dash Camera
Model /Type	:	Hero-ME40-02
Series Models	:	Please refer to page 6 for Serial models
Applicant	:	**Howen Technologies Co., Ltd.**
Address	:	6th Floor, Zone B, Jiada Research & Development Building, Songpingshan Rd, Hi-tech Park North, Nanshan, Shenzhen, Guangdong Province, China
Manufacturer	:	**Howen Technologies Co., Ltd.**
Address	:	6th Floor, Zone B, Jiada Research & Development Building, Songpingshan Rd, Hi-tech Park North, Nanshan, Shenzhen, Guangdong Province, China

Test Result:	**PASS**

The test report merely corresponds to the test sample.
It is not permitted to copy extracts of these test result without the written permission of the test laboratory.

The results shown in this test report refer only to the sample(s) tested unless otherwise stated and the sample(s) are retained for 30 days only. The document is issued by HUAK, this document cannot be reproduced except in full with our prior written permission. The more details and the authenticity of the report will be confirmed at http://www.cer-mark.com.

** Modified History **

Revision	Description	Issued Data	Remark
Revision 1.0	Initial Test Report Release	Jul. 19, 2022	Jason Zhou

The results shown in this test report refer only to the sample(s) tested unless otherwise stated and the sample(s) are retained for 30 days only. The document is issued by HUAK, this document cannot be reproduced except in full with our prior written permission. The more details and the authenticity of the report will be confirmed at http://www.cer-mark.com.

TEL : +86-755 2302 9901 FAX : +86-755 2302 9901 E-mail : service@cer-mark.com
Add: 1-2F., Building B2, Junfeng Zhongcheng Zhizao Innovation Park, Heping Community, Fuhai Street, Bao'an District, Shenzhen, Guangdong, China

Contents

1 TEST STANDARDS 5

2 SUMMARY 6

2.1 General Remarks 6
2.2 Product Description 6
2.3 Equipment under Test 6
2.4 Normal Accessory Setting 7
2.5 EUT Configuration 7
2.6 Related Submittal(s) / Grant (s) 7
2.7 Modifications 7
2.8 GeneralTest Conditions/Configurations 7

3 TEST ENVIRONMENT 8

3.1 Information of the Test Laboratory 8
3.2 Environmental Conditions 8
3.3 Test Description 8
3.4 Equipments Used During The Test 9

4 TEST CONDITIONS AND RESULTS 10

4.1 Output Power 10
4.2 Peak-to-Average Ratio (PAR) 15
4.3 Occupied Bandwidth and Emission Bandwidth 20
4.4 Band Edge Compliance 25
4.5 Spurious Emssionon Antenna Port 30
4.6 Radiated Spurious Emssion 53
4.7 Frequency Stability 59

5 TEST SETUP PHOTOS OF THE EUT 61

6 EXTERNAL AND INTERNALPHOTOS OF THE EUT 62

The results shown in this test report refer only to the sample(s) tested unless otherwise stated and the sample(s) are retained for 30 days only. The document is issued by HUAK, this document cannot be reproduced except in full with our prior written permission. The more details and the authenticity of the report will be confirmed at http://www.cer-mark.com.

TEL : +86-755 2302 9901 FAX : +86-755 2302 9901 E-mail : service@cer-mark.com
Add: 1-2F., Building B2, Junfeng Zhongcheng Zhizao Innovation Park, Heping Community, Fuhai Street, Bao'an District, Shenzhen, Guangdong, China

1 TEST STANDARDS

The tests were performed according to following standards:

FCC Part 2:FREQUENCY ALLOCA-TIONS AND RADIO TREATY MAT-TERS; GENERAL RULES AND REG-ULATIONS.

FCC Part 22Subpart H:PRIVATE LAND MOBILE RADIO SERVICES.

ANSI/TIA-603-E-2016: Land Mobile FM or PM Communications Equipment Measurement and Performance Standards.

ANSI C63.26-2015: IEEE/ANSI Standard for Compliance Testing of Transmitters Used in Licensed Radio Services.

FCC KDB 971168D01 v03r01 Power Meas License Digital Systems.

The results shown in this test report refer only to the sample(s) tested unless otherwise stated and the sample(s) are retained for 30 days only. The document is issued by HUAK, this document cannot be reproduced except in full with our prior written permission. The more details and the authenticity of the report will be confirmed at http://www.cer-mark.com.

2 SUMMARY

2.1 General Remarks

Date of receipt of test sample	:	Jul. 01, 2022
Testing commenced on	:	Jul. 01, 2022
Testing concluded on	:	Jul. 19, 2022

2.2 Product Description

Name of EUT:	Dash Camera
Model/Type reference:	Hero-ME40-02
Series Models:	Hero-MA90-01, Hero-MA90-02, Hero-MA90-03, Hero-MA90-04, Hero-ME40-01, Hero-ME40-02, Hero-ME40-03, Hero-ME40-04, Hero-MC30-01, Hero-MC30-02, Hero-MC30-03, Hero-MC30-04
Model Difference:	All model's the function, software and electric circuit are the same, only with a product model named different. Test sample model: Hero-ME40-02.
Power supply:	DC 12V From Power Box
Modilation Type:	QPSK,16QAM
Antenna Type:	Internal Antenna
Operation Frequency Band:	LTE BAND 5
Operation frequency:	LTE BAND 5:824~849 MHz
LTE Release:	R8
Extreme temp. Tolerance:	-30°C to +50°C
Extreme vol. Limits:	10.2VDC to 13.8VDC (nominal: 12.0VDC)

2.3 Equipment under Test

Power supply system utilised

Power supply voltage	:	○	120V/ 60 Hz	○	115V/60Hz
		○	12 V DC	○	24 V DC
		●	Other (specified in blank below)		

DC 12V From Power Box

The results shown in this test report refer only to the sample(s) tested unless otherwise stated and the sample(s) are retained for 30 days only. The document is issued by HUAK, this document cannot be reproduced except in full with our prior written permission. The more details and the authenticity of the report will be confirmed at http://www.cer-mark.com.

2.4 Normal Accessory Setting

Fully charged battery was used during the test.

2.5 EUT Configuration

The following peripheral devices and interface cables were connected during the measurement:

● - supplied by the manufacturer
○ - supplied by the lab

○	Power Cable	Length (m) :	/
		Shield :	/
		Detachable :	/
○	Multimeter	Manufacturer :	/
		Model No. :	/

2.6 Related Submittal(s) / Grant (s)

This submittal(s) (test report) is intended filing to comply with FCC Part 22H, Rules.

2.7 Modifications

No modifications were implemented to meet testing criteria.

2.8 GeneralTest Conditions/Configurations

2.10.1 Test Environment

EnvironmentParameter	SelectedValuesDuringTests	
Relative Humidity	Ambient	
Temperature	TN	Ambient
Voltage	VL	10.2V
	VN	12.0V
	VH	13.8V

NOTE:VL=lowerextreme testvoltageVN=nominalvoltage
VH=upperextreme testvoltageTN=normaltemperature

The results shown in this test report refer only to the sample(s) tested unless otherwise stated and the sample(s) are retained for 30 days only. The document is issued by HUAK, this document cannot be reproduced except in full with our prior written permission. The more details and the authenticity of the report will be confirmed at http://www.cer-mark.com.

3 TEST ENVIRONMENT

3.1 Information of the Test Laboratory

Shenzhen HUAK Testing Technology Co., Ltd.
Add.: 1-2/F., Building B2, Junfeng Zhongcheng Zhizao Innovation Park, Heping, Fuhai Street, Bao'an District, Shenzhen, Guangdong, China

Testing Laboratory Authorization：

A2LA Accreditation Code is 4781.01.
FCC Designation Number is CN1229.
Canada IC CAB identifier is CN0045.
CNAS Registration Number is L9589.

3.2 Environmental Conditions

During the measurement the environmental conditions were within the listed ranges:

Temperature:	15-35 ° C
Humidity:	30-60 %
Atmospheric pressure:	950-1050mbar

3.3 Test Description

Band 5 (824~849 MHz)

Test Item	FCCRuleNo.	Requirements	Verdict
Effective(Isotropic) Radiated Output Power	§2.1046, §22.913(a)(2)	EIRP ≤ 2W	Pass
Peak-Average Ratio	§24.232(d)	FCC:Limit≤13dB	Pass
Modulation Characteristics	§2.1047	Digital modulation	Pass
Bandwidth	§2.1049	OBW: Nolimit. EBW: Nolimit.	Pass
Band Edges Compliance	§2.1051, §24.238	≤ -13dBm/1%*EBW, In1MHz bands immediately outside and adjacent to Thefrequency block.	Pass
Spurious Emission at AntennaTerminals	§2.1051, §24.238	≤-13dBm/1MHz, from9kHz to 10th harmonics but outside authorized Operating frequency ranges.	Pass
Field Strength of Spurious Radiation	Clause 7of KDB971168 D01 v02r02	≤ -13dBm/1MHz.	Pass
Frequency Stability	§2.1055, §22.355, §24.235	FCC:within authorized frequency block.	Pass
NOTE 1:For theverdict, the"N/A"denotes"not applicable", the"N/T"denotes "nottested".			

Remark:
1. The measurement uncertainty is not included in the test result.

The results shown in this test report refer only to the sample(s) tested unless otherwise stated and the sample(s) are retained for 30 days only. The document is issued by HUAK, this document cannot be reproduced except in full with our prior written permission. The more details and the authenticity of the report will be confirmed at http://www.cer-mark.com.

3.4 Equipments Used During The Test

Test Equipment	Manufacturer	Model No.	Serial No.	Calibration Date	Calibration Due Date
LISN	R&S	ENV216	HKE-059	2022/02/18	2023/02/17
LISN	R&S	ENV216	HKE-002	2022/02/18	2023/02/17
Receiver	R&S	ESCI 7	HKE-010	2022/02/18	2023/02/17
Spectrum analyzer	R&S	FSP40	HKE-025	2022/02/18	2023/02/17
Spectrum analyzer	Agilent	N9020A	HKE-048	2022/02/18	2023/02/17
RF automatic control unit	Tonscend	JS0806-1	HKE-060	2022/02/18	2023/02/17
Loop antenna	Schwarzbeck	FMZB 1519 B	HKE-014	2022/02/18	2023/02/17
Bilog Broadband Antenna	Schwarzbeck	VULB9163	HKE-012	2022/02/18	2023/02/17
Horn antenna	Schwarzbeck	9120D	HKE-013	2022/02/18	2023/02/17
High gain antenna	Schwarzbeck	LB-180400KF	HKE-054	2022/02/18	2023/02/17
Preamplifier	EMCI	EMC051845SE	HKE-015	2022/02/18	2023/02/17
Preamplifier	Agilent	83051A	HKE-016	2022/02/18	2023/02/17
Preamplifier	Schwarzbeck	BBV 9743	HKE-006	2022/02/18	2023/02/17
Temperature and humidity meter	Boyang	HTC-1	HKE-075	2022/02/18	2023/02/17
High-low temperature chamber	Guangke	HT-80L	HKE-118	2022/02/18	2023/02/17
High pass filter unit	Tonscend	JS0806-F	HKE-055	2022/02/18	2023/02/17
RF Cable(below1GHz)	Times	9kHz-1GHz	HKE-117	2022/02/18	2023/02/17
RF Cable(above 1GHz)	Times	1-40G	HKE-034	2022/02/18	2023/02/17
Power meter	Agilent	E4419B	HKE-085	2022/02/18	2023/02/17
Power Sensor	Agilent	E9300A	HKE-086	2022/02/18	2023/02/17
Conducted test software	Tonscend	TS+ Rev 2.5.0.0	HKE-081	N/A	N/A
Radiated test software	Tonscend	TS+ Rev 2.5.0.0	HKE-082	N/A	N/A
RF test software	Tonscend	JS1120-B Version 2.6	HKE-083	N/A	N/A
RF test software	Tonscend	JS1120-4	HKE-113	N/A	N/A
RF test software	Tonscend	JS1120-3	HKE-114	N/A	N/A
RF test software	Tonscend	JS1120-1	HKE-115	N/A	N/A
Wireless Communication Test Set	R&S	CMW500	HKE-026	2022/02/18	2023/02/17
Wireless Communication Test Set	R&S	CMU200	HKE-029	2022/02/18	2023/02/17
High gain antenna	Schwarzbeck	LB-180400KF	HKE-054	2022/02/18	2023/02/17
Horn antenna	Schwarzbeck	9120D	HKE-135	2022/02/18	2023/02/17
High gain antenna	Schwarzbeck	LB-180400KF	HKE-128	2022/02/18	2023/02/17
Broadband antenna	Schwarzbeck	VULB 9163	HKE-087	2022/02/18	2023/02/17
Signal generator	Agilent	E4433B	HKE-120	2022/02/18	2023/02/17
Signal generator	Agilent	E4421B	HKE-121	2022/02/18	2023/02/17

The results shown in this test report refer only to the sample(s) tested unless otherwise stated and the sample(s) are retained for 30 days only. The document is issued by HUAK, this document cannot be reproduced except in full with our prior written permission. The more details and the authenticity of the report will be confirmed at http://www.cer-mark.com.

4 TEST CONDITIONS AND RESULTS

4.1 Output Power

4.1.1 Coducted Output Power

TEST APPLICABLE

During the process of testing, the EUT was controlled via R&S Digital Radio Communication tester (CMW500) to ensure max power transmission and proper modulation. This result contains output power and EIRP measurements for the EUT. In all cases, output power is within the specified limits.

TEST CONFIGURATION

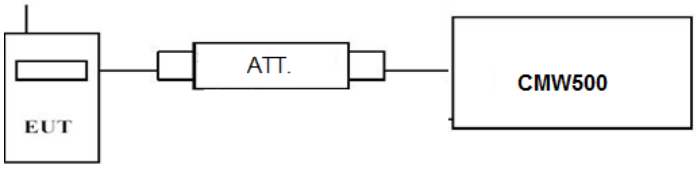

TEST PROCEDURE

Conducted Power Measurement:

a) Place the EUT on a bench and set it in transmitting mode.
b) Connect a low loss RF cable from the antenna port to a CMW500 by an Att.
c) EUT Communicate with CMW500 then selects a channel for testing.
d) Add a correction factor to the display CMW500, and then test.

TEST RESULTS

compliance *

Remark:

1. *We measured all RB Configuration refer 3GPP TS136 521 for each Channel Bandwidth of LTE FDD Band 5;*

LTE FDD Band 5				
TX Channel Bandwidth	Frequency (MHz)	RB Size/Offset	Burst Average Power [dBm]	
			QPSK	16QAM
1.4 MHz	824.7	1 RB low	22.90	21.65
		1 RB high	23.01	21.74
		50% RB mid	22.86	21.78
		100% RB	22.90	21.73
	836.5	1 RB low	22.00	21.71
		1 RB high	23.08	21.89
		50% RB mid	23.24	20.74
		100% RB	23.15	22.11
	848.3	1 RB low	23.43	22.52
		1 RB high	23.33	22.18
		50% RB mid	23.41	21.75
		100% RB	22.31	21.57
3 MHz	825.5	1 RB low	22.07	22.08
		1 RB high	22.04	21.69
		50% RB mid	22.06	21.76
		100% RB	22.85	21.19
	836.5	1 RB low	23.01	21.18
		1 RB high	22.87	21.09

The results shown in this test report refer only to the sample(s) tested unless otherwise stated and the sample(s) are retained for 30 days only. The document is issued by HUAK, this document cannot be reproduced except in full with our prior written permission. The more details and the authenticity of the report will be confirmed at http://www.cer-mark.com.

		50% RB mid	22.04	21.97
		100% RB	22.14	21.98
	847.5	1 RB low	21.98	21.99
		1 RB high	22.07	21.08
		50% RB mid	23.13	21.14
		100% RB	23.44	21.05
5 MHz	826.5	1 RB low	23.53	21.13
		1 RB high	22.25	22.19
		50% RB mid	22.27	22.41
		100% RB	22.31	22.37
	836.5	1 RB low	22.84	21.80
		1 RB high	22.89	21.51
		50% RB mid	22.77	21.84
		100% RB	22.02	21.04
	846.5	1 RB low	22.00	21.02
		1 RB high	21.96	20.83
		50% RB mid	22.00	20.96
		100% RB	22.93	21.64
10 MHz	829.0	1 RB low	23.25	21.65
		1 RB high	23.18	21.97
		50% RB mid	22.00	21.03
		100% RB	21.99	20.92
	836.5	1 RB low	22.00	20.93
		1 RB high	22.01	20.85
		50% RB mid	23.21	22.23
		100% RB	23.29	22.20
	844.0	1 RB low	23.45	22.16
		1 RB high	22.13	21.18
		50% RB mid	22.21	21.05
		100% RB	22.28	21.31

The results shown in this test report refer only to the sample(s) tested unless otherwise stated and the sample(s) are retained for 30 days only. The document is issued by HUAK, this document cannot be reproduced except in full with our prior written permission. The more details and the authenticity of the report will be confirmed at http://www.cer-mark.com.

4.1.2. Radiated Output Power

LIMIT

This is the test for the maximum radiated power from the EUT.
Rule Part 22H.232(b) specifies, "Mobile/portable stations are limited to 7 watts e.i.r.p.

TEST CONFIGURATION

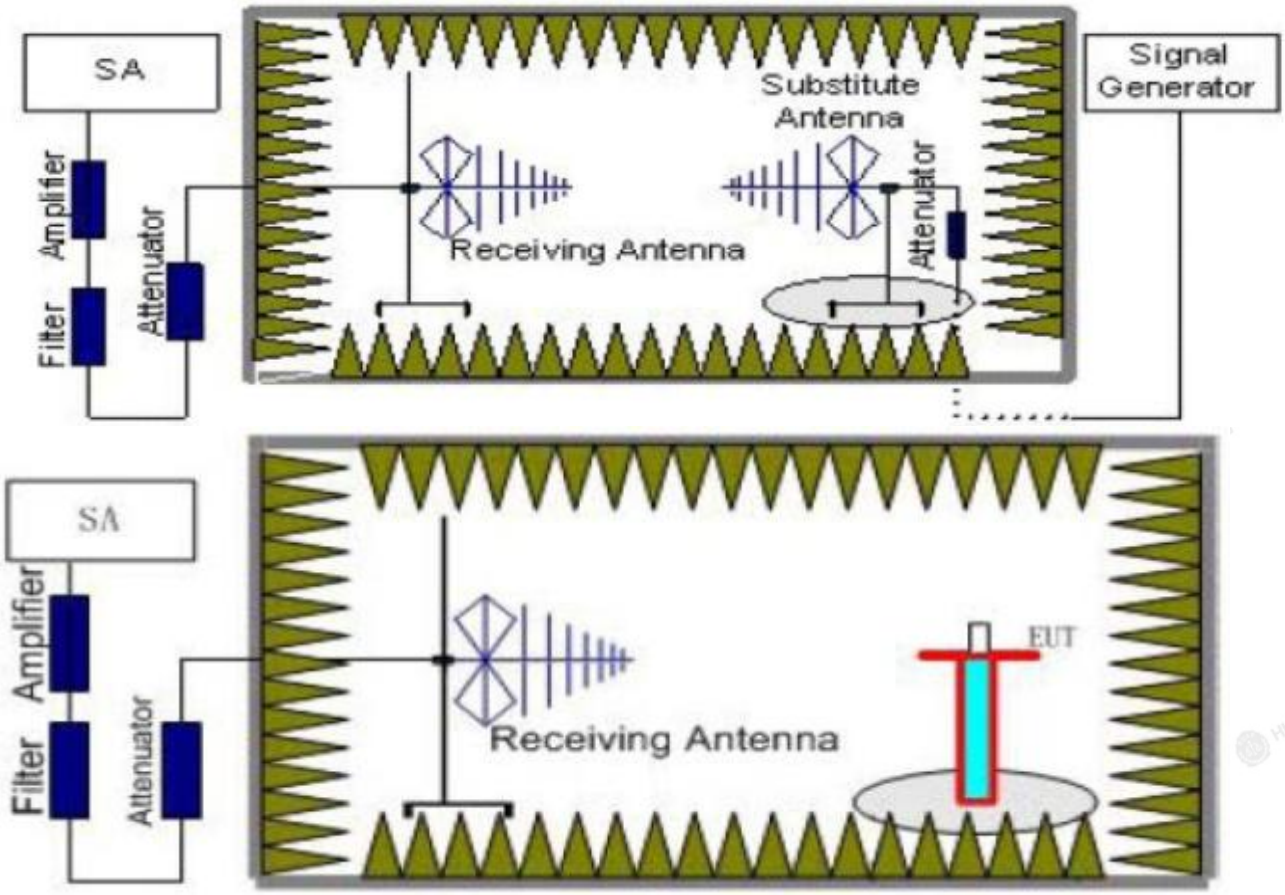

TEST PROCEDURE

1. EUT was placed on a 0.1 meter high non-conductive stand at a 3 meter test distance from the receive antenna. A receiving antenna was placed on the antenna mast 3 meters from the EUT for emission measurements. The height of receiving antenna is 0.1m. Detected emissions were maximized at each frequency by rotating the EUT through 360° and adjusting the receiving antenna polarization. The radiated emission measurements of all transmit frequencies in three channels (High, Middle, Low) were measured with peak detector.
2. A log-periodic antenna or double-ridged waveguide horn antenna shall be substituted in place of the EUT. The log-periodic antenna will be driven by a signal generator and the level will be adjusted till the same power value on the spectrum analyzer or receiver. The level of the spurious emissions can be calculated through the level of the signal generator, cable loss, the gain of the substitution antenna and the reading of the spectrum analyzer or receiver.
3. The EUT is then put into continuously transmitting mode at its maximum power level during the test.Set Test Receiver or Spectrum RBW=1MHz,VBW=3MHz, And the maximum value of the receiver should be recorded as (P_r).
4. The EUT shall be replaced by a substitution antenna.In the chamber, an substitution antenna for the frequency band of interest is placed at the reference point of the chamber. An RF Signal source for the frequency band of interest isconnected to the substitution antenna with a cable that has been constructed to not interfere with the radiation pattern of the antenna. A power (P_{Mea}) is applied to the input of the substitution antenna, and adjust the level of the signal generator output until the value of the receiver.

The results shown in this test report refer only to the sample(s) tested unless otherwise stated and the sample(s) are retained for 30 days only. The document is issued by HUAK, this document cannot be reproduced except in full with our prior written permission. The more details and the authenticity of the report will be confirmed at http://www.cer-mark.com.

5. reach the previously recorded (P_r). The power of signal source (P_{Mea}) is recorded. The test should be performed by rotating the test item and adjusting the receiving antenna polarization.
6. A amplifier should be connected to the Signal Source output port. And the cable should be connect between the Amplifier and the Substitution Antenna. The cable loss (P_{cl}) ,the Substitution Antenna Gain (G_a) and the Amplifier Gain (P_{Ag}) should be recorded after test.
   The measurement results are obtained as described below: Power(EIRP)=P_{Mea}- P_{Ag} - P_{cl}+ G_a
   We used SMF100A micowave signal generator which signal level can up to 33dBm,so we not used power Amplifier for substituation test; The measurement results are amend as described below:
   Power(EIRP)=P_{Mea}- P_{cl}+ G_a
7. This value is EIRP since the measurement is calibrated using an antenna of known gain (2.15 dBi) and known input power.
8. ERP can be calculated from EIRP by subtracting the gain of the dipole, ERP = EIRP-2.15dBi.

TEST RESULTS

Radiated Measurement:

Remark:

1. *We measured all RB Configuration refer 3GPP TS136 521 for each Channel Bandwidth of LTE FDD Band 5; recorded worst case for each Channel Bandwidth of LTE FDD Band 5.*
2. *EIRP=P_{Mea}(dBm)-P_{cl}(dB)+P_{Ag}(dB)+G_a(dBi)*
3. *We measured both Horizontal and Vertical direction, recorded worst case direction.*

LTE FDDBand 5_Channel Bandwidth 1.4MHz_QPSK

Frequency (MHz)	P_{Mea} (dBm)	P_{cl} (dB)	G_a Antenna Gain(dB)	P_{Ag} (dB)	EIRP (dBm)	ERP (dBm)	Limit (dBm)	Margin (dB)	Polarization
824.7	-17.21	2.42	8.45	36.82	25.64	23.49	38.45	12.81	V
836.5	-15.74	3.46	8.45	36.82	26.07	23.92	38.45	12.38	V
848.3	-18.53	2.53	8.36	36.82	24.12	21.97	38.45	14.33	V

LTE FDDBand 5_Channel Bandwidth 3MHz_QPSK

Frequency (MHz)	P_{Mea} (dBm)	P_{cl} (dB)	G_a Antenna Gain(dB)	P_{Ag} (dB)	EIRP (dBm)	ERP (dBm)	Limit (dBm)	Margin (dB)	Polarization
825.5	-17.99	2.42	8.45	36.82	24.86	22.71	38.45	13.59	V
836.5	-16.26	3.46	8.45	36.82	25.55	23.4	38.45	12.9	V
847.5	-18.74	2.53	8.36	36.82	23.91	21.76	38.45	14.54	V

LTE FDD Band 5_Channel Bandwidth 5MHz_QPSK

Frequency (MHz)	P_{Mea} (dBm)	P_{cl} (dB)	G_a Antenna Gain(dB)	P_{Ag} (dB)	EIRP (dBm)	ERP (dBm)	Limit (dBm)	Margin (dB)	Polarization
826.5	-16.5	2.42	8.45	36.82	26.35	24.2	38.45	12.1	V
836.5	-16.38	3.46	8.45	36.82	25.43	23.28	38.45	13.02	V
846.5	-19.28	2.53	8.36	36.82	23.37	21.22	38.45	15.08	V

LTE FDD Band 5_Channel Bandwidth 10MHz_QPSK

Frequency (MHz)	P_{Mea} (dBm)	P_{cl} (dB)	G_a Antenna Gain(dB)	P_{Ag} (dB)	EIRP (dBm)	ERP (dBm)	Limit (dBm)	Margin (dB)	Polarization
829.0	-17.15	2.42	8.45	36.82	25.7	23.55	38.45	12.75	V
836.5	-16.09	3.46	8.45	36.82	25.72	23.57	38.45	12.73	V
844.0	-18.3	2.53	8.36	36.82	24.35	22.2	38.45	14.1	V

The results shown in this test report refer only to the sample(s) tested unless otherwise stated and the sample(s) are retained for 30 days only. The document is issued by HUAK, this document cannot be reproduced except in full with our prior written permission. The more details and the authenticity of the report will be confirmed at http://www.cer-mark.com.

LTE FDD Band 5_Channel Bandwidth 1.4MHz_16QAM

Frequency (MHz)	P_{Mea} (dBm)	P_{cl} (dB)	G_a Antenna Gain(dB)	P_{Ag} (dB)	EIRP (dBm)	ERP (dBm)	Limit (dBm)	Margin (dB)	Polarization
824.7	-16.78	2.42	8.45	36.82	26.07	23.92	38.45	12.38	V
836.5	-16.78	3.46	8.45	36.82	25.03	22.88	38.45	13.42	V
848.3	-19.78	2.53	8.36	36.82	22.87	20.72	38.45	15.58	V

LTE FDD Band 5_Channel Bandwidth 3MHz_16QAM

Frequency (MHz)	P_{Mea} (dBm)	P_{cl} (dB)	G_a Antenna Gain(dB)	P_{Ag} (dB)	EIRP (dBm)	ERP (dBm)	Limit (dBm)	Margin (dB)	Polarization
825.5	-17.62	2.42	8.45	36.82	25.23	23.08	38.45	13.22	V
836.5	-17.17	3.46	8.45	36.82	24.64	22.49	38.45	13.81	V
847.5	-17.87	2.53	8.36	36.82	24.78	22.63	38.45	13.67	V

LTE FDD Band 5_Channel Bandwidth 5MHz_16QAM

Frequency (MHz)	P_{Mea} (dBm)	P_{cl} (dB)	G_a Antenna Gain(dB)	P_{Ag} (dB)	EIRP (dBm)	ERP (dBm)	Limit (dBm)	Margin (dB)	Polarization
826.5	-16.9	2.42	8.45	36.82	25.95	23.8	38.45	12.5	V
836.5	-16.87	3.46	8.45	36.82	24.94	22.79	38.45	13.51	V
846.5	-17.41	2.53	8.36	36.82	25.24	23.09	38.45	13.21	V

LTE FDD Band 5_Channel Bandwidth 10MHz_16QAM

Frequency (MHz)	P_{Mea} (dBm)	P_{cl} (dB)	G_a Antenna Gain(dB)	P_{Ag} (dB)	EIRP (dBm)	ERP (dBm)	Limit (dBm)	Margin (dB)	Polarization
829.0	-17.32	2.42	8.45	36.82	25.53	23.38	38.45	12.92	V
836.5	-16.7	3.46	8.45	36.82	25.11	22.96	38.45	13.34	V
844.0	-17.57	2.53	8.36	36.82	25.08	22.93	38.45	13.37	V

The results shown in this test report refer only to the sample(s) tested unless otherwise stated and the sample(s) are retained for 30 days only. The document is issued by HUAK, this document cannot be reproduced except in full with our prior written permission. The more details and the authenticity of the report will be confirmed at http://www.cer-mark.com.

4.2 Peak-to-Average Ratio (PAR)

LIMIT

The Peak-to-Average Ratio (PAR) of the transmission may not exceed 13 dB.

TEST CONFIGURATION

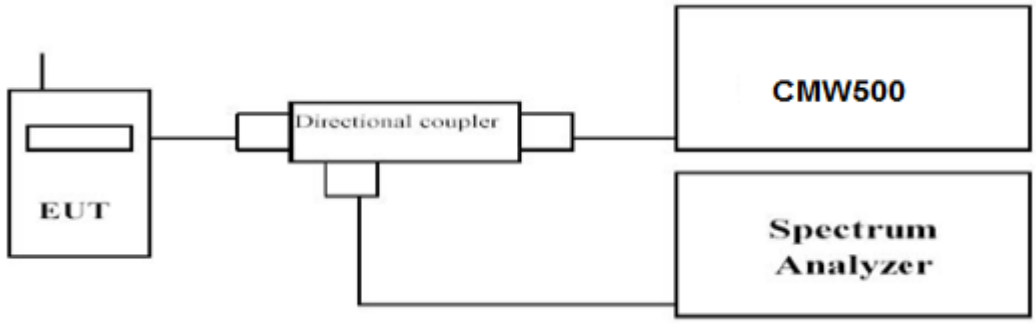

TEST PROCEDURE

1. Refer to instrument's analyzer instruction manual for details on how to use the power statistics/CCDF function;
2. Set resolution/measurement bandwidth ≥ signal's occupied bandwidth;
3. Set the number of counts to a value that stabilizes the measured CCDF curve;
4. Set the measurement interval as follows:
   1). for continuous transmissions, set to 1 ms;
   2). for burst transmissions, employ an external trigger that is synchronized with the EUT burst timing sequence, or use the internal burst trigger with a trigger level that allows the burst to stabilize and set the measurement interval to a time that is less than or equal to the burst duration.
5. Record the maximum PAPR level associated with a probability of 0.1%.

TEST RESULTS

Remark:

1. *We measured all RB Configuration refer 3GPP TS136 521 for each Channel Bandwidth of LTE FDD Band 5; recorded worst case for each Channel Bandwidth of LTE FDD Band 5.*

LTE FDD Band 5				
TX Channel Bandwidth	Frequency (MHz)	RB Size/Offset	PAPR(dB)	
			QPSK	16QAM
1.4 MHz	824.7	*1RB#0*	8.46	8.48
	836.5		4.75	5.80
	848.3		4.58	5.57
3 MHz	825.5	*1RB#0*	4.19	5.26
	836.5		4.75	8.47
	847.5		4.30	5.13
5 MHz	826.5	*1RB#0*	4.17	4.96
	836.5		4.69	5.63
	846.5		3.84	4.67
10 MHz	829.0	*1RB#0*	3.91	4.72
	836.5		4.56	5.41
	844.0		3.79	4.79

The results shown in this test report refer only to the sample(s) tested unless otherwise stated and the sample(s) are retained for 30 days only. The document is issued by HUAK, this document cannot be reproduced except in full with our prior written permission. The more details and the authenticity of the report will be confirmed at http://www.cer-mark.com.

LTE FDD Band 5– 1.4 MHz Channel BandwidthPAPR	
QPSK	16QAM
Low Channel	
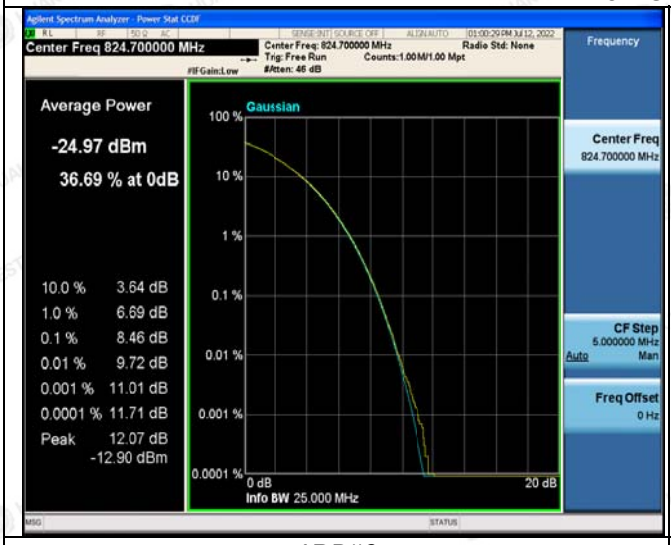	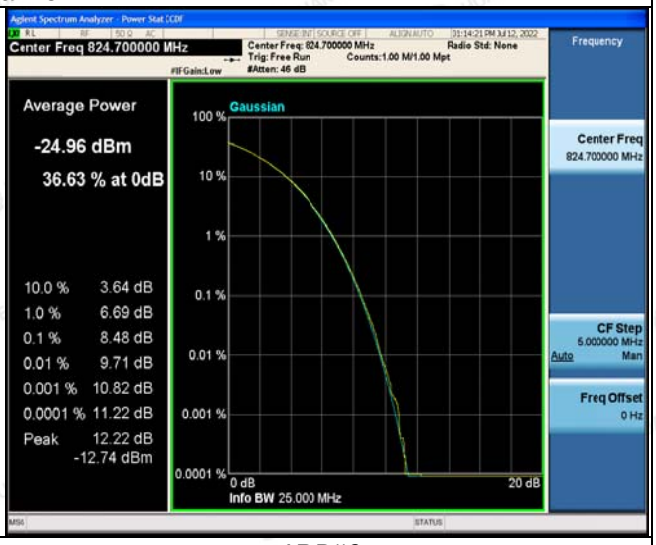
1RB#0	1RB#0
Middle Channel	
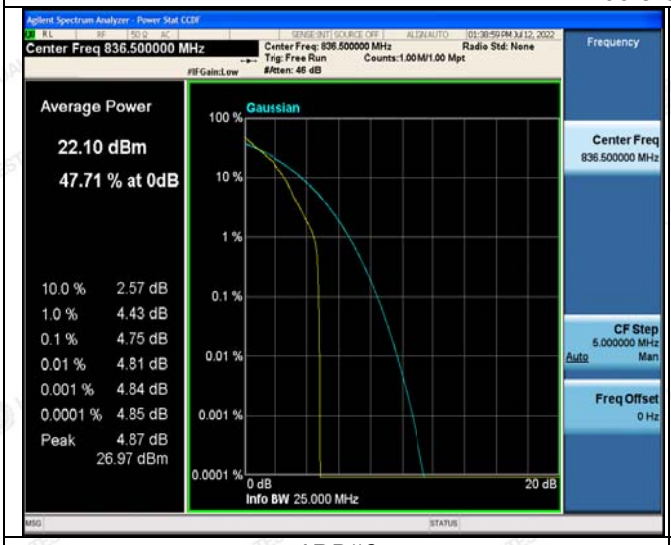	
1RB#0	1RB#0
High Channel	
1RB#0	1RB#0

The results shown in this test report refer only to the sample(s) tested unless otherwise stated and the sample(s) are retained for 30 days only. The document is issued by HUAK, this document cannot be reproduced except in full with our prior written permission. The more details and the authenticity of the report will be confirmed at http://www.cer-mark.com.

LTE FDD Band 5–3MHz Channel BandwidthPAPR	
QPSK	16QAM
Low Channel	
	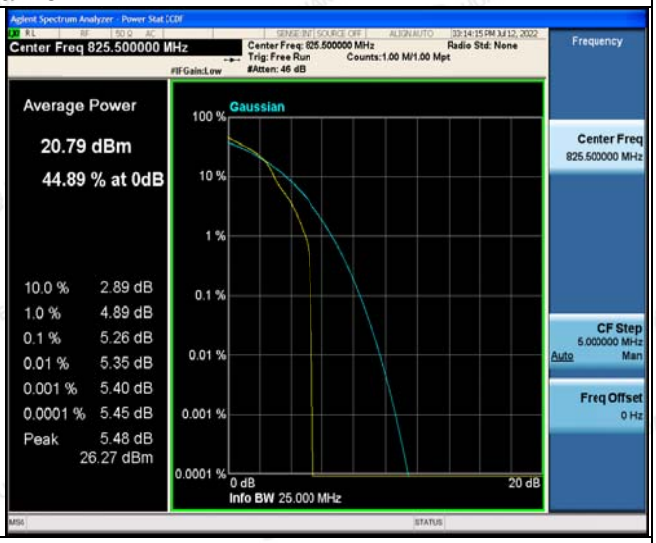
1RB#0	1RB#0
Middle Channel	
1RB#0	1RB#0
High Channel	
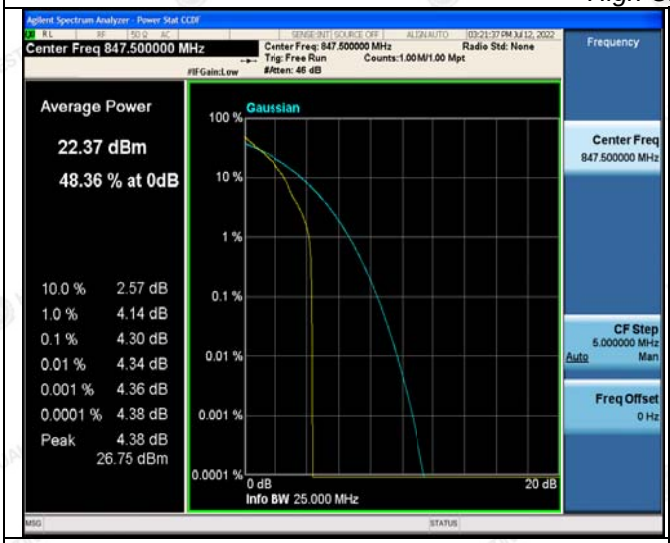	
1RB#0	1RB#0

The results shown in this test report refer only to the sample(s) tested unless otherwise stated and the sample(s) are retained for 30 days only. The document is issued by HUAK, this document cannot be reproduced except in full with our prior written permission. The more details and the authenticity of the report will be confirmed at http://www.cer-mark.com.

LTE FDD Band 5–5MHz Channel BandwidthPAPR	
QPSK	16QAM
Low Channel	
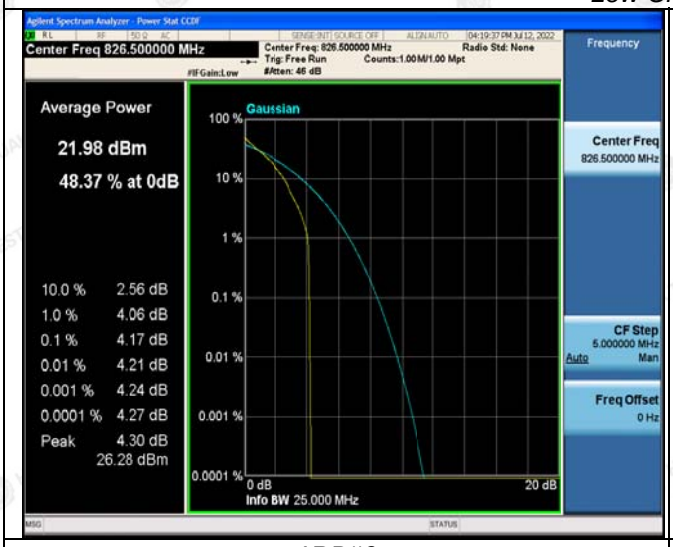	
1RB#0	1RB#0
Middle Channel	
	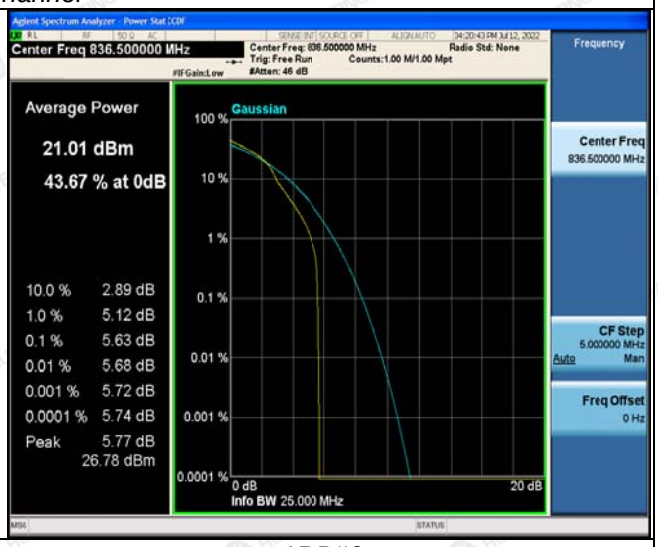
1RB#0	1RB#0
High Channel	
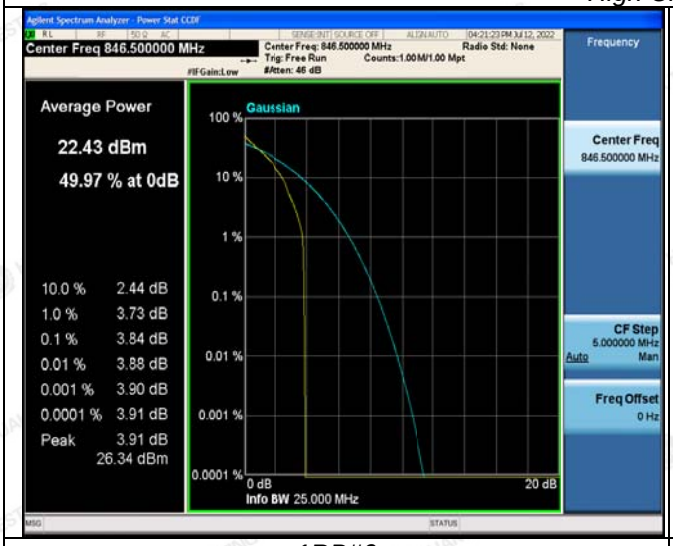	
1RB#0	1RB#0

The results shown in this test report refer only to the sample(s) tested unless otherwise stated and the sample(s) are retained for 30 days only. The document is issued by HUAK, this document cannot be reproduced except in full with our prior written permission. The more details and the authenticity of the report will be confirmed at http://www.cer-mark.com.

LTE FDD Band 5–10MHz Channel BandwidthPAPR	
QPSK	16QAM
Low Channel	
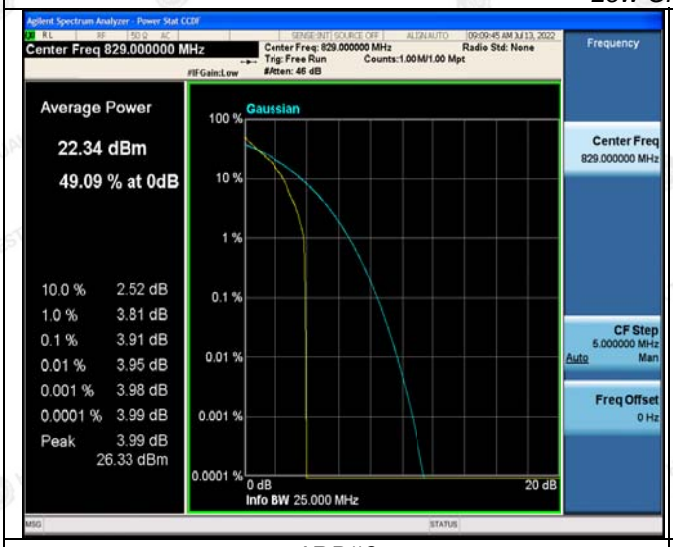	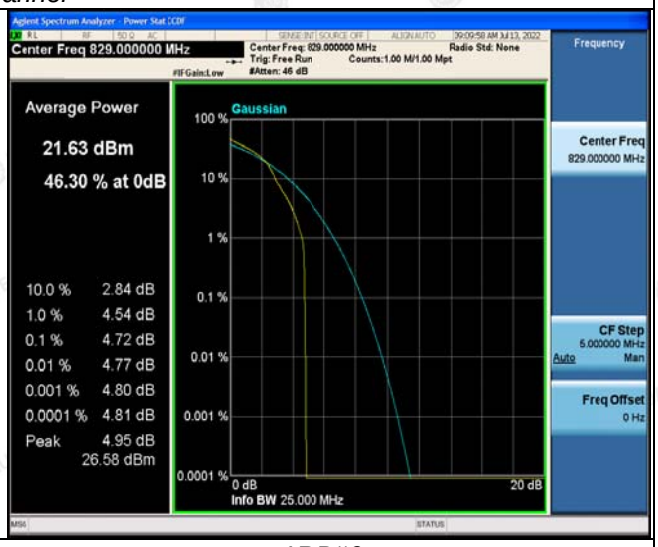
1RB#0	1RB#0
Middle Channel	
1RB#0	1RB#0
High Channel	
	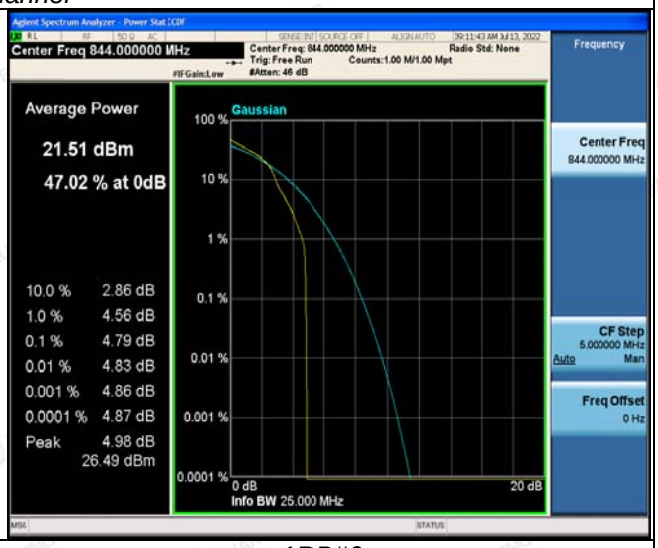
1RB#0	1RB#0

The results shown in this test report refer only to the sample(s) tested unless otherwise stated and the sample(s) are retained for 30 days only. The document is issued by HUAK, this document cannot be reproduced except in full with our prior written permission. The more details and the authenticity of the report will be confirmed at http://www.cer-mark.com.

4.3 Occupied Bandwidth and Emission Bandwidth

LIMIT

N/A

TEST CONFIGURATION

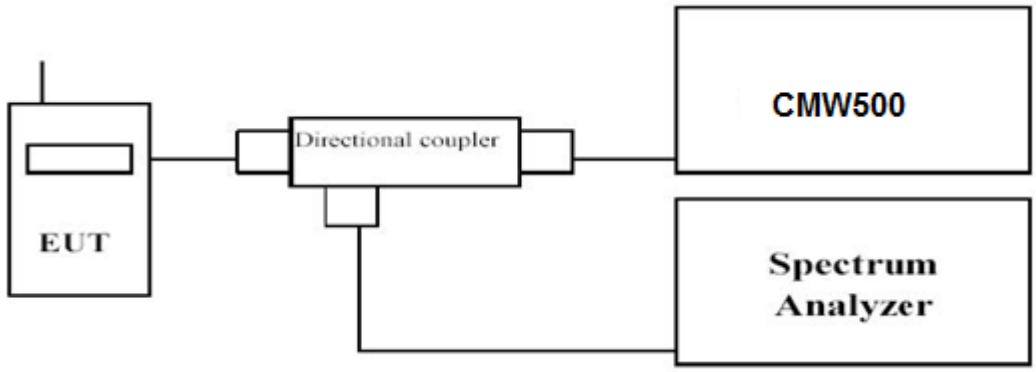

TEST PROCEDURE

The transmitter output was connected to a calibrated coaxial cable and coupler, the other end of which was connected to a spectrum analyzer. The occupied bandwidth was measured with the spectrum analyzer at low, middle and high channel in each band. The -26dBc Emission bandwidth was also measured and recorded.
Set RBWwas set to about 1% of emission BW, VBW≥3 times RBW.
-26dBc display line was placed on the screen (or 99% bandwidth), the occupied bandwidth isthe delta frequency between the two points where the display line intersects the signal trace.

TEST RESULTS

Remark:

1. *We were tested all RB Configuration refer 3GPP TS136 521 for each Channel Bandwidth of LTE FDD Band 5; recorded worst case for each Channel Bandwidth of LTE FDD Band 5.*

LTE FDD Band 5						
TX Channel Bandwidth	RB Size/Offset	Frequency (MHz)	-26dBc Emission bandwidth (MHz)		99% Occupied bandwidth (MHz)	
			QPSK	16QAM	QPSK	16QAM
1.4 MHz	*6RB#0*	824.7	1.304	1.286	1.0908	1.0986
		836.5	1.298	1.303	1.0932	1.0992
		848.3	1.265	1.271	1.0850	1.0897
3 MHz	*15RB#0*	825.5	2.964	2.966	2.7020	2.6861
		836.5	2.967	2.974	2.7025	2.6946
		847.5	2.972	2.972	2.7002	2.6919
5 MHz	*25RB#0*	826.5	5.035	4.986	4.5074	4.5016
		836.5	5.022	4.983	4.5126	4.5052
		846.5	5.011	5.036	4.5005	4.5098
10 MHz	*50RB#0*	829.0	9.962	9.889	9.0004	8.9880
		836.5	9.845	9.869	8.9479	8.9498
		844.0	20.00	20.00	19.841	19.851

The results shown in this test report refer only to the sample(s) tested unless otherwise stated and the sample(s) are retained for 30 days only. The document is issued by HUAK, this document cannot be reproduced except in full with our prior written permission. The more details and the authenticity of the report will be confirmed at http://www.cer-mark.com.

LTE FDD Band 5– 1.4 MHz Channel Bandwidth Occupied Bandwidth and Emission Bandwidth	
QPSK	16QAM
Low Channel	
	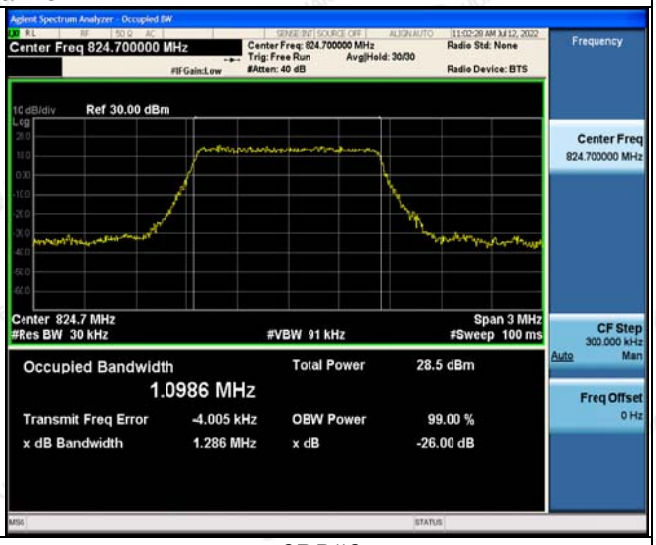
6RB#0	6RB#0
Middle Channel	
6RB#0	6RB#0
High Channel	
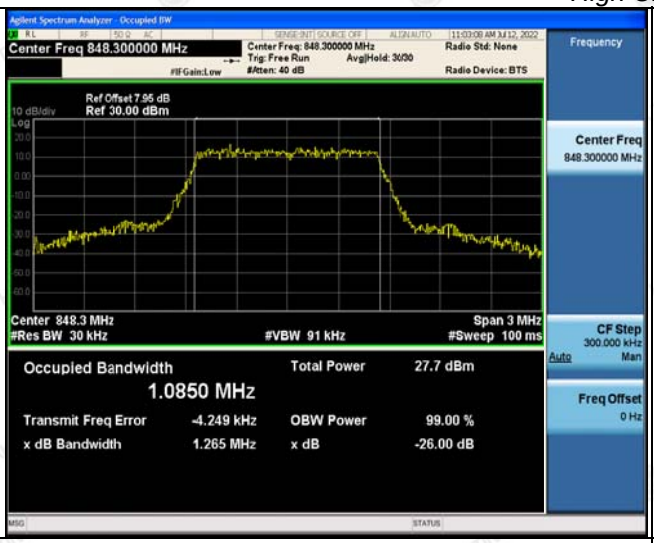	
6RB#0	6RB#0

The results shown in this test report refer only to the sample(s) tested unless otherwise stated and the sample(s) are retained for 30 days only. The document is issued by HUAK, this document cannot be reproduced except in full with our prior written permission. The more details and the authenticity of the report will be confirmed at http://www.cer-mark.com.

LTE FDD Band 5–3MHz Channel Bandwidth Occupied Bandwidth and Emission Bandwidth	
QPSK	16QAM
Low Channel	
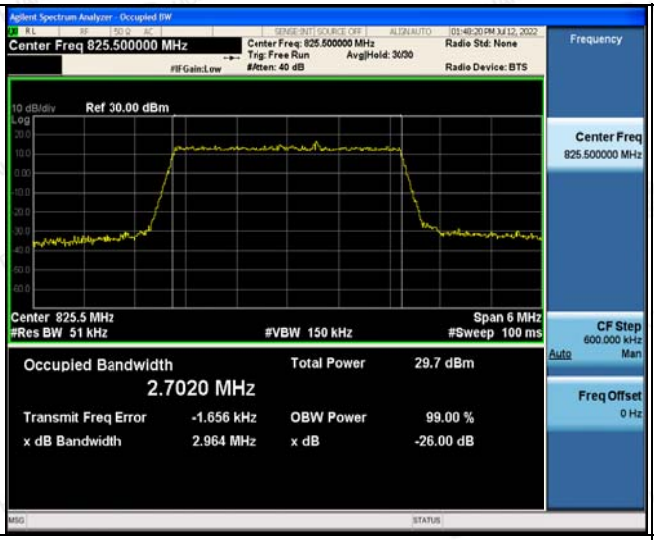	
15RB#0	15RB#0
Middle Channel	
	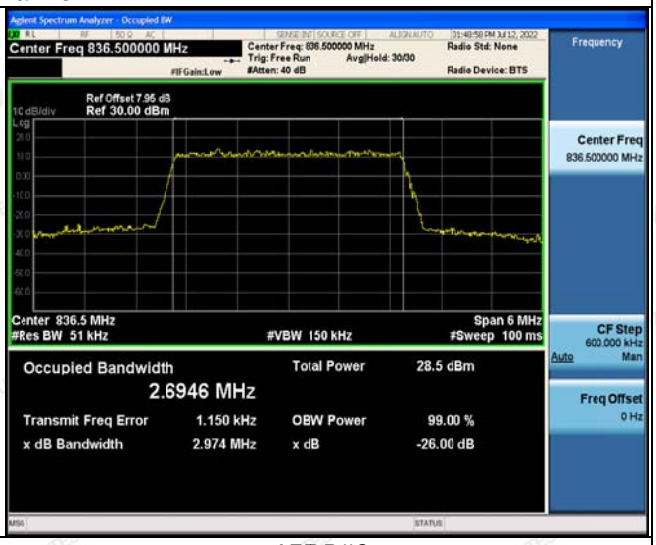
15RB#0	15RB#0
High Channel	
	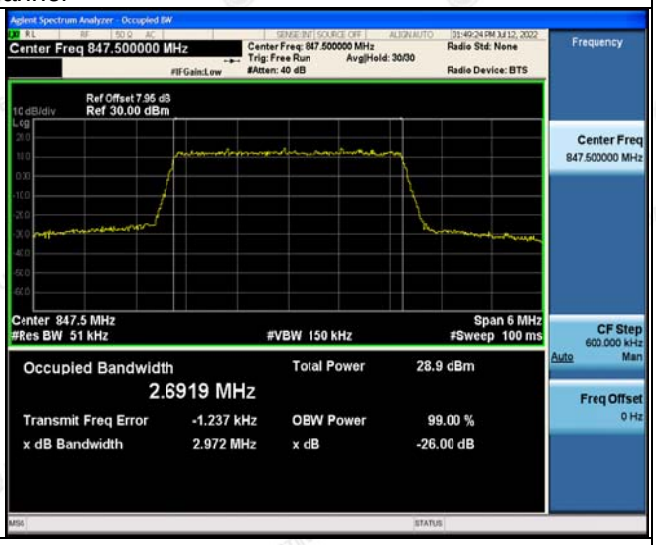
15RB#0	15RB#0

The results shown in this test report refer only to the sample(s) tested unless otherwise stated and the sample(s) are retained for 30 days only. The document is issued by HUAK, this document cannot be reproduced except in full with our prior written permission. The more details and the authenticity of the report will be confirmed at http://www.cer-mark.com.

LTE FDD Band 5–5MHz Channel Bandwidth Occupied Bandwidth and Emission Bandwidth	
QPSK	16QAM
Low Channel	
25RB#0	25RB#0
Middle Channel	
25RB#0	25RB#0
High Channel	
25RB#0	25RB#0

The results shown in this test report refer only to the sample(s) tested unless otherwise stated and the sample(s) are retained for 30 days only. The document is issued by HUAK, this document cannot be reproduced except in full with our prior written permission. The more details and the authenticity of the report will be confirmed at http://www.cer-mark.com.

LTE FDD Band 5–10MHz Channel Bandwidth Occupied Bandwidth and Emission Bandwidth	
QPSK	16QAM
Low Channel	
50RB#0	50RB#0
Middle Channel	
50RB#0	50RB#0
High Channel	
50RB#0	50RB#0

The results shown in this test report refer only to the sample(s) tested unless otherwise stated and the sample(s) are retained for 30 days only. The document is issued by HUAK, this document cannot be reproduced except in full with our prior written permission. The more details and the authenticity of the report will be confirmed at http://www.cer-mark.com.

4.4 Band Edge Compliance

LIMIT

Per FCC §24.238 the power of any emission outside of the authorized operating frequency ranges must be attenuated below the transmitting power (P) by a factor of at least 43 + 10log(P) dB.

TEST CONFIGURATION

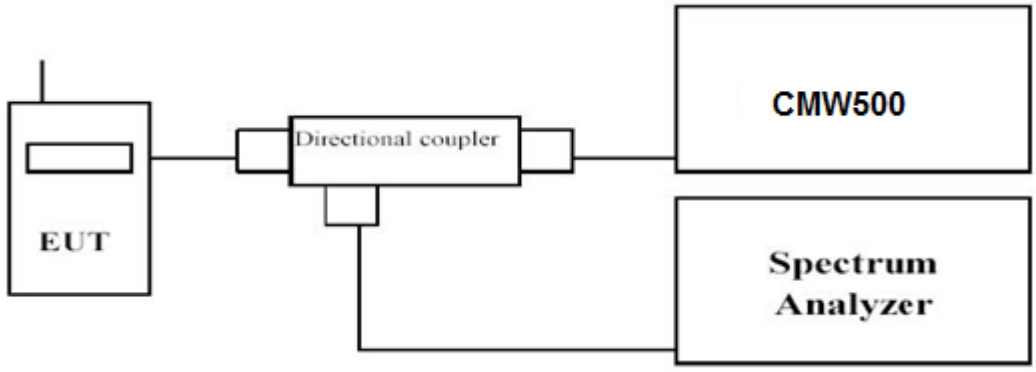

TEST PROCEDURE

1. The transmitter output port was connected to base station.
2. The RF output of EUT was connected to the power meter by RF cable and attenuator, the path loss was compensated to the results for each measurement.
3. Set EUT at maximum power through base station.
4. Select lowestand highest channels for each band and different modulation.
5. Measure Band edge using RMS (Average) detector by spectrum.

TEST RESULTS

Remark:

1. *We were tested all RB Configuration refer 3GPP TS136 521 for each Channel Bandwidth of LTE FDD Band 5; recorded worst case for each Channel Bandwidth of LTE FDD Band 5.*

The results shown in this test report refer only to the sample(s) tested unless otherwise stated and the sample(s) are retained for 30 days only. The document is issued by HUAK, this document cannot be reproduced except in full with our prior written permission. The more details and the authenticity of the report will be confirmed at http://www.cer-mark.com.

LTE FDD Band 5– 1.4 MHz Channel BandwidthBand Edge Compliance	
QPSK	16QAM
Low Channel	
6RB#0	6RB#0
High Channel	
6RB#0	6RB#0

The results shown in this test report refer only to the sample(s) tested unless otherwise stated and the sample(s) are retained for 30 days only. The document is issued by HUAK, this document cannot be reproduced except in full with our prior written permission. The more details and the authenticity of the report will be confirmed at http://www.cer-mark.com.

LTE FDD Band 5–3MHz Channel BandwidthBand Edge Compliance	
QPSK	16QAM
Low Channel	
15RB#0	15RB#0
High Channel	
15RB#0	15RB#0

The results shown in this test report refer only to the sample(s) tested unless otherwise stated and the sample(s) are retained for 30 days only. The document is issued by HUAK, this document cannot be reproduced except in full with our prior written permission. The more details and the authenticity of the report will be confirmed at http://www.cer-mark.com.

LTE FDD Band 5–5MHz Channel BandwidthBand Edge Compliance	
QPSK	16QAM
Low Channel	
25RB#0	25RB#0
High Channel	
25RB#0	25RB#0

The results shown in this test report refer only to the sample(s) tested unless otherwise stated and the sample(s) are retained for 30 days only. The document is issued by HUAK, this document cannot be reproduced except in full with our prior written permission. The more details and the authenticity of the report will be confirmed at http://www.cer-mark.com.

LTE FDD Band 5– 10 MHz Channel BandwidthBand Edge Compliance	
QPSK	16QAM
Low Channel	
50RB#0	50RB#0
High Channel	
50RB#0	50RB#0

The results shown in this test report refer only to the sample(s) tested unless otherwise stated and the sample(s) are retained for 30 days only. The document is issued by HUAK, this document cannot be reproduced except in full with our prior written permission. The more details and the authenticity of the report will be confirmed at http://www.cer-mark.com.

4.5 Spurious Emssionon Antenna Port

LIMIT

Per FCC §24.238, the power of any emission outside of the authorized operating frequency ranges must be attenuated below the transmitting power (P) by a factor of at least 43 + 10log(P) dB.

TEST CONFIGURATION

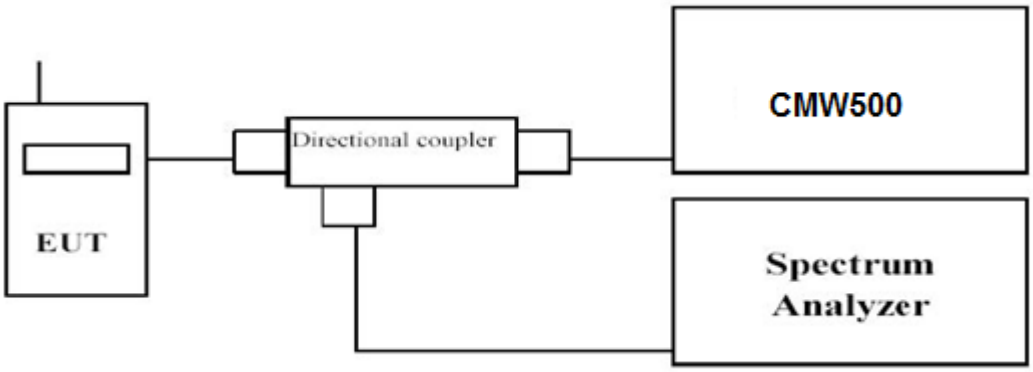

TEST PROCEDURE

The EUT was setup according to EIA/TIA 603D.

a. Place the EUT on a bench and set it in transmitting mode.
b. Connect a low loss RF cable from the antenna port to a spectrum analyzer andCMW500 by a Directional Couple.
c. EUT Communicate with CMW500, then select a channel for testing.
d. Add a correction factor to the display of spectrum, and then test.
e. The resolution bandwidth of the spectrum analyzer was setsufficient scans were taken to show the out of band Emission if any up to10th harmonic.
f. Please refer to following tables for test antenna conducted emissions.

Working Frequency	Sub range (GHz)	RBW	VBW	Sweep time (s)
LTE FDD Band 5	0.01~20	1 MHz	3 MHz	Auto

TEST RESULTS

Remark:

1. *We were tested all RB Configuration refer 3GPP TS136 521 for each Channel Bandwidth of LTE FDD Band 5; recorded worst case at the QPSK Mode for each Channel Bandwidth of LTE FDD Band 5.*

The results shown in this test report refer only to the sample(s) tested unless otherwise stated and the sample(s) are retained for 30 days only. The document is issued by HUAK, this document cannot be reproduced except in full with our prior written permission. The more details and the authenticity of the report will be confirmed at http://www.cer-mark.com.