TEST REPORT
FCC CFR Title 47 Part 2, Part 27

Report Reference No.....:	HK2207012848-7E
FCC ID.....:	2AGBD-HERO-ME40-02
Compiled by (position+printed name+signature)..:	File administrators Gary Qian
Supervised by (position+printed name+signature)..:	Technique principal Eden Hu
Approved by (position+printed name+signature)..:	Manager Jason Zhou
Date of issue.....:	Jul. 19, 2022

Testing Laboratory Name .....:	**Shenzhen HUAK Testing Technology Co., Ltd.**
Address .....:	1-2/F., Building B2, Junfeng Zhongcheng Zhizao Innovation Park, Heping, Fuhai Street, Bao'an District, Shenzhen, Guangdong, China
Applicant's name.....:	**Howen Technologies Co., Ltd.**
Address .....:	6th Floor, Zone B, Jiada Research & Development Building, Songpingshan Rd, Hi-tech Park North, Nanshan, Shenzhen, Guangdong Province, China
Test specification .....:	
Standard .....:	**FCC CFR Title 47 Part 2, Part 27**
TRF Originator.....:	Shenzhen HUAK Testing Technology Co., Ltd.

Shenzhen HUAK Testing Technology Co., Ltd. All rights reserved.
This publication may be reproduced in whole or in part for non-commercial purposes as long as the Shenzhen HUAK Testing Technology Co., Ltd. as copyright owner and source of the material. Shenzhen HUAK Testing Technology Co., Ltd.takess no responsibility for and will not assume liability for damages resulting from the reader's interpretation of the reproduced material due to its placement and context.

Test item description .....:	Dash Camera
Trade Mark .....:	N/A
Manufacturer.....:	**Howen Technologies Co., Ltd.**
Model/Type reference.....:	Hero-ME40-02
Series Models .....:	Please refer to page 6 for Serial models
Modulation Type .....:	QPSK, 16QAM
Rating .....:	DC 12V From Power Box
Hardware version .....:	V2.0
Software version .....:	V2.0
Result.....:	**PASS**

TEST REPORT

Test Report No. :	HK2207012848-7E	Jul. 19, 2022 Date of issue

Equipment under Test	:	Dash Camera
Model /Type	:	Hero-ME40-02
Series Models	:	Please refer to page 6 for Serial models
Applicant	:	**Howen Technologies Co., Ltd.**
Address	:	6th Floor, Zone B, Jiada Research & Development Building, Songpingshan Rd, Hi-tech Park North, Nanshan, Shenzhen, Guangdong Province, China
Manufacturer	:	**Howen Technologies Co., Ltd.**
Address	:	6th Floor, Zone B, Jiada Research & Development Building, Songpingshan Rd, Hi-tech Park North, Nanshan, Shenzhen, Guangdong Province, China

Test result	Pass

The test report merely corresponds to the test sample.
It is not permitted to copy extracts of these test result without the written permission of the test laboratory.

The results shown in this test report refer only to the sample(s) tested unless otherwise stated and the sample(s) are retained for 30 days only. The document is issued by HUAK, this document cannot be reproduced except in full with our prior written permission. The more details and the authenticity of the report will be confirmed at http://www.cer-mark.com.

Contents

1	SUMMARY	4
1.1	Test Standards	4
1.2	Test Description	4
1.3	Information of The Test Laboratory	5
1.4	Statement of The Measurement Uncertainty	5
2	GENERAL INFORMATION	6
2.1	General Remarks	6
2.2	Product Description	6
2.3	Equipment Under Test	6
2.4	Environmental Conditions	6
2.5	Description of Test Modes	7
2.6	Equipments Used During The Test	8
2.7	Modifications	8
3	TEST CONDITIONS AND RESULTS	9
3.1	Output Power	9
3.2	Radiated Measurement	11
3.3	Peak-to-Average Ratio (PAR)	12
3.4	Occupied Bandwidth and Emission Bandwidth	15
3.5	Band Edge Compliance	18
3.6	Spurious Emission	21
3.7	Frequency Stability Under Temperature & Voltage Variations	33
4	TEST SETUP PHOTOS OF THE EUT	35
5	PHOTOS OF THE EUT	36

The results shown in this test report refer only to the sample(s) tested unless otherwise stated and the sample(s) are retained for 30 days only. The document is issued by HUAK, this document cannot be reproduced except in full with our prior written permission. The more details and the authenticity of the report will be confirmed at http://www.cer-mark.com.

TEL : +86-755 2302 9901 FAX : +86-755 2302 9901 E-mail : service@cer-mark.com
Add: 1-2F., Building B2, Junfeng Zhongcheng Zhizao Innovation Park, Heping Community, Fuhai Street, Bao'an District, Shenzhen, Guangdong, China

1 SUMMARY

1.1 Test Standards

The tests were performed according to following standards:
FCC Part 27: MISCELLANEOUS WIRELESS COMMUNICATIONS SERVICES
47 CFR FCC Part 15 Subpart B: - Unintentional Radiators.

FCC Part 2: FREQUENCY ALLOCA-TIONS AND RADIO TREATY MAT-TERS; GENERAL RULES AND REG-ULATIONS.

1.2 Test Description

Test Item	Section in CFR 47	Result
RF Output Power	Part 2.1046 27.50 (b)(10)	Pass
Peak-to-Average Ratio	27.50 (d)(5)	Pass
99% & -26 dB Occupied Bandwidth	Part 2.1049 Part 27.53(h)	Pass
Spurious Emissions at Antenna Terminal	Part 2.1051 Part 27.53(h)	Pass
Field Strength of Spurious Radiation	Clause 7of KDB971168 D01 v02r02	Pass
Out of band emission, Band Edge	2.1051 27.53 (c)(2) and (5), (h)(1) and (3)(i)	Pass
Frequency stability	2.1055 27.54	Pass

The results shown in this test report refer only to the sample(s) tested unless otherwise stated and the sample(s) are retained for 30 days only. The document is issued by HUAK, this document cannot be reproduced except in full with our prior written permission. The more details and the authenticity of the report will be confirmed at http://www.cer-mark.com.

1.3 Information of The Test Laboratory

Shenzhen HUAK Testing Technology Co., Ltd.
Add.: 1-2/F., Building B2, Junfeng Zhongcheng Zhizao Innovation Park, Heping, Fuhai Street, Bao'an District, Shenzhen, Guangdong, China

Testing Laboratory Authorization：

A2LA Accreditation Code is 4781.01.
FCC Designation Number is CN1229.
Canada IC CAB identifier is CN0045.
CNAS Registration Number is L9589.

1.4 Statement of The Measurement Uncertainty

The data and results referenced in this document are true and accurate. The reader is cautioned that there may be errors within the calibration limits of the equipment and facilities. The measurement uncertainty was calculated for all measurements listed in this test report acc. to CISPR 16 - 4 „Specification for radio disturbance and immunity measuring apparatus and methods – Part 4:Uncertainty in EMC Measurements“ and is documented in the Shenzhen HUAK Testing Technology Co., Ltd.quality system acc. to DIN EN ISO/IEC 17025. Furthermore, component and process variability of devices similar to that tested may result in additional deviation. The manufacturer has the sole responsibility of continued compliance of the device.

Hereafter the best measurement capability for Shenzhen HUAK Testing Technology Co., Ltd.is reported:

Test	Range	Measurement Uncertainty	Notes
Radiated Emission	30~1000MHz	4.10dB	(1)
Radiated Emission	Above 1GHz	4.32dB	(1)
Conducted Disturbance	0.15~30MHz	3.20dB	(1)

(1) This uncertainty represents an expanded uncertainty expressed at approximately the 95% confidence level using a coverage factor of k=2.

The results shown in this test report refer only to the sample(s) tested unless otherwise stated and the sample(s) are retained for 30 days only. The document is issued by HUAK, this document cannot be reproduced except in full with our prior written permission. The more details and the authenticity of the report will be confirmed at http://www.cer-mark.com.

2 GENERAL INFORMATION

2.1 General Remarks

Date of receipt of test sample	:	Jul. 01, 2022
Testing commenced on	:	Jul. 01, 2022
Testing concluded on	:	Jul. 19, 2022

2.2 Product Description

Name of EUT	Dash Camera
Model/Type reference:	Hero-ME40-02
Series Models:	Hero-MA90-01, Hero-MA90-02, Hero-MA90-03, Hero-MA90-04, Hero-ME40-01, Hero-ME40-02, Hero-ME40-03, Hero-ME40-04, Hero-MC30-01, Hero-MC30-02, Hero-MC30-03, Hero-MC30-04
Model Difference:	All model's the function, software and electric circuit are the same, only with a product model named different. Test sample model: Hero-ME40-02.
Power supply:	DC 12V From Power Box
Adapter Information	N/A
Modilation Type	QPSK,16QAM
Antenna Type	Internal Antenna
Operation Frequency Band	LTE Band 13
Operation frequency	LTE Band 13: 777~787 MHz
LTE Release	R8
Extreme temp. Tolerance	-30°C to +50°C
Extreme vol. Limits	10.2VDC to 13.8VDC (nominal: 12.0VDC)

2.3 Equipment Under Test

Power supply system utilised

Power supply voltage	:	○	120V/ 60 Hz	○	115V/60Hz
		○	12 V DC	○	24 V DC
		●	Other (specified in blank below)		

DC 12V From Power Box

2.4 Environmental Conditions

During the measurement the environmental conditions were within the listed ranges:

Normal Temperature:	25°C
Relative Humidity:	55 %
Air Pressure:	101 kPa

The results shown in this test report refer only to the sample(s) tested unless otherwise stated and the sample(s) are retained for 30 days only. The document is issued by HUAK, this document cannot be reproduced except in full with our prior written permission. The more details and the authenticity of the report will be confirmed at http://www.cer-mark.com.

2.5 Description of Test Modes

The EUT has been tested under typical operating condition. The CMW500 used to control the EUT staying in continuous transmitting and receiving mode for testing. Regards to the frequency band operation: the lowest、middle and highest frequency of channel were selected to perform the test, then shown on this report.

Note:

1. For the ERP/EIRP and radiated emission test, every axis (X, Y, Z) was verified, and show the worst resulton this report.
2. Test method and refer to 3GPP TS136521.

The results shown in this test report refer only to the sample(s) tested unless otherwise stated and the sample(s) are retained for 30 days only. The document is issued by HUAK, this document cannot be reproduced except in full with our prior written permission. The more details and the authenticity of the report will be confirmed at http://www.cer-mark.com.

2.6 Equipments Used During The Test

Test Equipment	Manufacturer	Model No.	Serial No.	Calibration Date	Calibration Due Date
LISN	ENV216	R&S	HKE-059	2022/02/18	2023/02/17
LISN	R&S	ENV216	HKE-002	2022/02/18	2023/02/17
Broadband antenna	Schwarzbeck	VULB 9163	HKE-012	2022/02/18	2023/02/17
Receiver	R&S	ESCI 7	HKE-010	2022/02/18	2023/02/17
Spectrum analyzer	Agilent	N9020A	HKE-048	2022/02/18	2023/02/17
RF automatic control unit	Tonscend	JS0806-2	HKE-060	2022/02/18	2023/02/17
Horn antenna	Schwarzbeck	9120D	HKE-013	2022/02/18	2023/02/17
Loop antenna	Schwarzbeck	FMZB 1519 B	HKE-014	2022/02/18	2023/02/17
Preamplifier	EMCI	EMC051845SE	HKE-015	2022/02/18	2023/02/17
Preamplifier	Agilent	83051A	HKE-016	2022/02/18	2023/02/17
Temperature and humidity meter	Boyang	HTC-1	HKE-075	2022/02/18	2023/02/17
High pass filter unit	Tonscend	JS0806-F	HKE-055	2022/02/18	2023/02/17
RF cable	Times	1-40G	HKE-034	2022/02/18	2023/02/17
Power meter	Agilent	E4419B	HKE-085	2022/02/18	2023/02/17
Power Sensor	Agilent	E9300A	HKE-086	2022/02/18	2023/02/17
Wireless Communication Test Set	R&S	CMW500	HKE-026	2022/02/18	2023/02/17
Horn Antenna	Schewarzbeck	BBHA 9170	HKE-017	2022/02/18	2023/02/17
High gain antenna	Schwarzbeck	LB-180400KF	HKE-054	2022/02/18	2023/02/17
Horn antenna	Schwarzbeck	9120D	HKE-135	2022/02/18	2023/02/17
High gain antenna	Schwarzbeck	LB-180400KF	HKE-128	2022/02/18	2023/02/17
Broadband antenna	Schwarzbeck	VULB 9163	HKE-087	2022/02/18	2023/02/17
Signal generator	Agilent	E4433B	HKE-120	2022/02/18	2023/02/17
Signal generator	Agilent	E4421B	HKE-121	2022/02/18	2023/02/17

2.7 Modifications

No modifications were implemented to meet testing criteria.

The results shown in this test report refer only to the sample(s) tested unless otherwise stated and the sample(s) are retained for 30 days only. The document is issued by HUAK, this document cannot be reproduced except in full with our prior written permission. The more details and the authenticity of the report will be confirmed at http://www.cer-mark.com.

3 TEST CONDITIONS AND RESULTS

3.1 Output Power

LIMIT

According to §27.50 (b) (10): Portable stations (hand-held devices) transmitting in the 746-757 MHz, 776-788 MHz, and 805-806 MHz bands are limited to 3 watts ERP.

TEST CONFIGURATION

Conducted Power Measurement

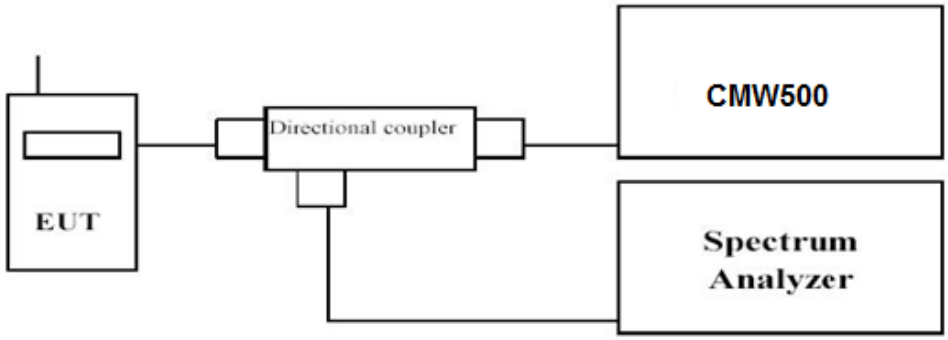

Radiated Power Measurement:

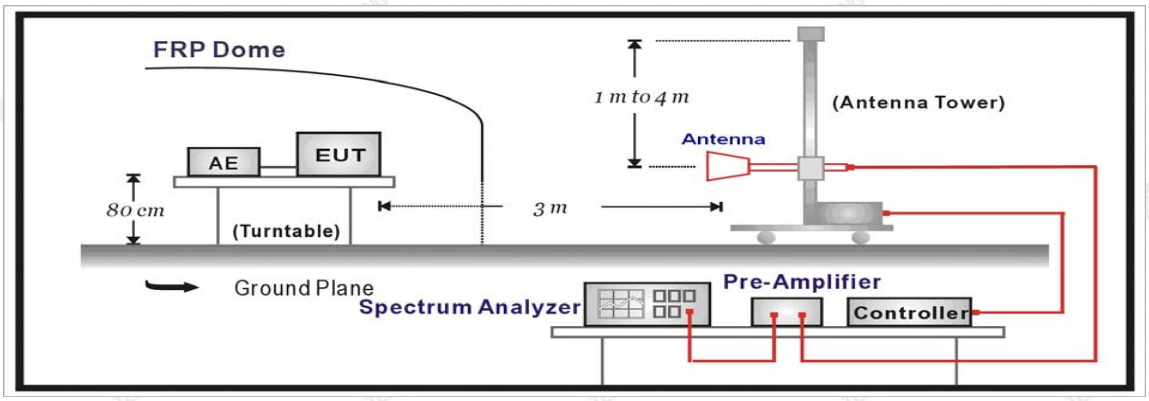

TEST PROCEDURE

The EUT was setup according to EIA/TIA 603D.

Conducted Power Measurement:

a) Place the EUT on a bench and set it in transmitting mode.
b) Connect a low loss RF cable from the antenna port to a spectrum analyzer and CMW500 by a Directional Couple.
c) EUT Communicate with CMW500, then select a channel for testing.
d) Add a correction factor to the display of spectrum, and then test.

Radiated Power Measurement:

a. The EUT shall be placed at the specified height on a support, and in the position closest to normal use as declared by provider.
b. The test antenna shall be oriented initially for vertical polarization and shall be chosen to correspond to thefrequency of the transmitter.
c. The output of the test antenna shall be connected to the measuring receiver.
d. The transmitter shall be switched on and the measuring receiver shall be tuned to the frequency of the transmitter under test.

The results shown in this test report refer only to the sample(s) tested unless otherwise stated and the sample(s) are retained for 30 days only. The document is issued by HUAK, this document cannot be reproduced except in full with our prior written permission. The more details and the authenticity of the report will be confirmed at http://www.cer-mark.com.

e. The test antenna shall be raised and lowered through the specified range of height until a maximum signal level is detected by the measuring receiver.
f. The transmitter shall then be rotated through 360° in the horizontal plane, until the maximum signal level is detected by the measuring receiver.
g. The test antenna shall be raised and lowered again through the specified range of height until a maximum signal level is detected by the measuring receiver.
h. The maximum signal level detected by the measuring receiver shall be noted.
i. The transmitter shall be replaced by a substitution antenna.
j. The substitution antenna shall be orientated for vertical polarization and the length of the substitution antenna shall be adjusted to correspond to the frequency of the transmitter.
k. The substitution antenna shall be connected to a calibrated signal generator.
l. If necessary, the input attenuator setting of the measuring receiver shall be adjusted in order to increase the sensitivity of the measuring receiver.
m. The test antenna shall be raised and lowered through the specified range of height to ensure that the maximum signal is received.
n. The input signal to the substitution antenna shall be adjusted to the level that produces a level detected by the measuring receiver, that is equal to the level noted while the transmitter radiated power was measured, corrected for the change of input attenuator setting of the measuring receiver.
o. The measurement shall be repeated with the test antenna and the substitution antenna orientated for horizontal polarization.
p. The measure of the effective radiated power is the larger of the two levels recorded at the input to the substitution antenna, corrected for gain of the substitution antenna if necessary.
q. Test site anechoic chamber refer to ANSI C63.4.

TEST RESULTS

Conducted Measurement:

LTE FDD Band 13				
TX Channel Bandwidth	RB Size/Offset	Frequency (MHz)	Average Power [dBm]	
			QPSK	16QAM
5 MHz	1 RB low	779.5	22.46	22.07
		782	23.45	22.07
		784.5	23.54	22.41
	1 RB high	779.5	23.33	21.30
		782	22.40	21.49
		784.5	22.35	21.36
	50% RB mid	779.5	22.43	21.42
		782	22.42	22.52
		784.5	23.27	22.27
	100% RB	779.5	23.71	22.17
		782	23.57	21.35
		784.5	22.55	21.31
10 MHz	1 RB low	782	23.54	21.39
	1 RB high	782	23.57	21.49
	50% RB mid	782	22.59	22.12
	100% RB	782	22.55	22.41

The results shown in this test report refer only to the sample(s) tested unless otherwise stated and the sample(s) are retained for 30 days only. The document is issued by HUAK, this document cannot be reproduced except in full with our prior written permission. The more details and the authenticity of the report will be confirmed at http://www.cer-mark.com.

3.2 Radiated Measurement

Remark:

1. *We were tested all RB Configuration refer 3GPP TS136 521 for each Channel Bandwidth of LTE FDD Band 13; recorded worst case for each Channel Bandwidth of LTE FDD Band 13.*
2. *EIRP=P_{Mea}(dBm)-P_{cl}(dB)+P_{Ag}(dB)+G_a(dBi)*
   Margin= Limit- EIRP

LTE FDD Band 13_Channel Bandwidth 5MHz_QPSK

Frequency (MHz)	P_{Mea} (dBm)	P_{cl} (dB)	G_a Antenna Gain(dB)	P_{Ag} (dB)	EIRP (dBm)	ERP (dBm)	Limit (dBm)	Margin (dB)	Polarization
779.5	-18.05	3.06	9.68	34.8	23.37	21.22	34.77	13.55	V
782.0	-17.22	3.17	9.68	34.8	24.09	21.94	34.77	12.83	V
784.5	-16.75	3.22	9.75	34.8	24.58	22.43	34.77	12.34	V
779.5	-17.81	3.06	9.68	34.8	23.61	21.46	34.77	13.31	H
782.0	-17.56	3.17	9.68	34.8	23.75	21.6	34.77	13.17	H
784.5	-18.27	3.22	9.75	34.8	23.06	20.91	34.77	13.86	H

LTE FDD Band 13_Channel Bandwidth 10MHz_QPSK

Frequency (MHz)	P_{Mea} (dBm)	P_{cl} (dB)	G_a Antenna Gain(dB)	P_{Ag} (dB)	EIRP (dBm)	ERP (dBm)	Limit (dBm)	Margin (dB)	Polarization
782.0	-15.51	3.22	9.75	34.8	25.82	23.67	34.77	11.1	V
782.0	-15.73	3.06	9.68	34.8	25.69	23.54	34.77	11.23	H

LTE FDD Band 13_Channel Bandwidth 5MHz_16QAM

Frequency (MHz)	P_{Mea} (dBm)	P_{cl} (dB)	G_a Antenna Gain(dB)	P_{Ag} (dB)	EIRP (dBm)	ERP (dBm)	Limit (dBm)	Margin (dB)	Polarization
779.5	-18.22	3.06	9.68	34.8	23.2	21.05	34.77	13.72	V
782.0	-17.81	3.17	9.68	34.8	23.5	21.35	34.77	13.42	V
784.5	-16.97	3.22	9.75	34.8	24.36	22.21	34.77	12.56	V
779.5	-18.36	3.06	9.68	34.8	23.06	20.91	34.77	13.86	H
782.0	-17.8	3.17	9.68	34.8	23.51	21.36	34.77	13.41	H
784.5	-17.35	3.22	9.75	34.8	23.98	21.83	34.77	12.94	H

LTE FDD Band 13_Channel Bandwidth 10MHz_16QAM

Frequency (MHz)	P_{Mea} (dBm)	P_{cl} (dB)	G_a Antenna Gain(dB)	P_{Ag} (dB)	EIRP (dBm)	ERP (dBm)	Limit (dBm)	Margin (dB)	Polarization
782.0	-15.68	3.22	9.75	34.8	25.65	23.5	34.77	11.27	V
782.0	-15.33	3.06	9.68	34.8	26.09	23.94	34.77	10.83	H

The results shown in this test report refer only to the sample(s) tested unless otherwise stated and the sample(s) are retained for 30 days only. The document is issued by HUAK, this document cannot be reproduced except in full with our prior written permission. The more details and the authenticity of the report will be confirmed at http://www.cer-mark.com.

3.3 Peak-to-Average Ratio (PAR)

LIMIT

The Peak-to-Average Ratio (PAR) of the transmission may not exceed 13 dB.

TEST CONFIGURATION

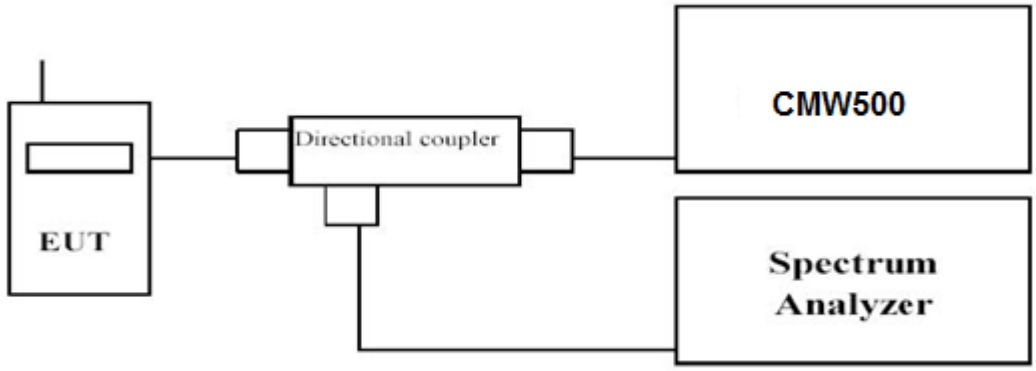

TEST PROCEDURE

1. Refer to instrument's analyzer instruction manual for details on how to use the power statistics/CCDF function;
2. Set resolution/measurement bandwidth ≥ signal's occupied bandwidth;
3. Set the number of counts to a value that stabilizes the measured CCDF curve;
4. Set the measurement interval as follows:
   1). for continuous transmissions, set to 1 ms;
   2). for burst transmissions, employ an external trigger that is synchronized with the EUT burst timing sequence, or use the internal burst trigger with a trigger level that allows the burst to stabilize and set the measurement interval to a time that is less than or equal to the burst duration.
5. Record the maximum PAPR level associated with a probability of 0.1%.

TEST RESULTS

Remark:

1. *We were tested all RB Configuration refer 3GPP TS136 521 for each Channel Bandwidth of LTE Band 13; recorded worst case for each Channel Bandwidth of LTE Band 13.*

LTE Band 13				
TX Channel Bandwidth	Frequency (MHz)	RB Size/Offset	PAPR (dB)	
			QPSK	16QAM
5 MHz	779.5	*1RB#0*	4.21	5.06
	782		4.10	5.07
	784.5		4.04	4.90
10 MHz	782	*1RB#0*	4.17	5.09

The results shown in this test report refer only to the sample(s) tested unless otherwise stated and the sample(s) are retained for 30 days only. The document is issued by HUAK, this document cannot be reproduced except in full with our prior written permission. The more details and the authenticity of the report will be confirmed at http://www.cer-mark.com.

LTE Band 13-5MHz Channel Bandwidth PAPR	
QPSK	16QAM
1RB#0	1RB#0
Low Channel	
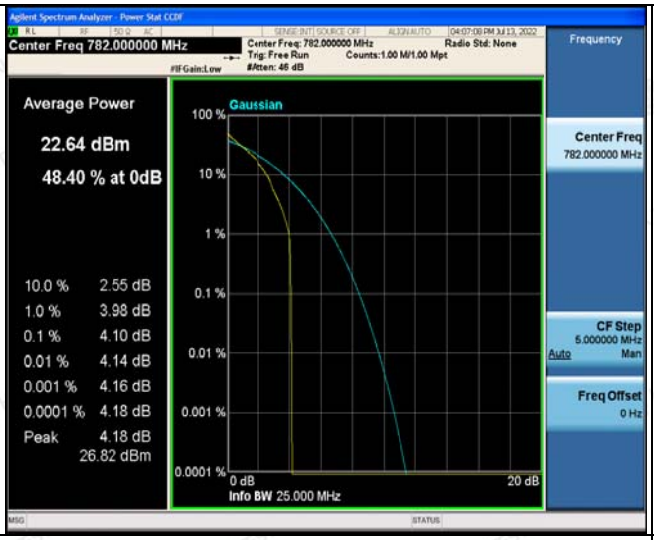	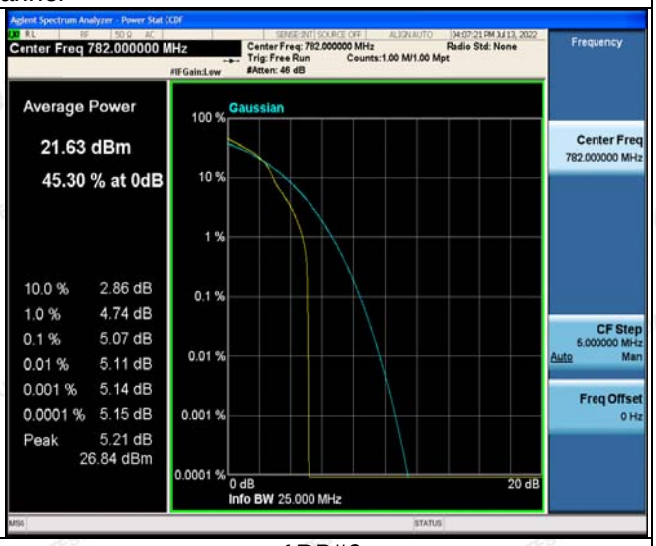
1RB#0	1RB#0
Middle Channel	
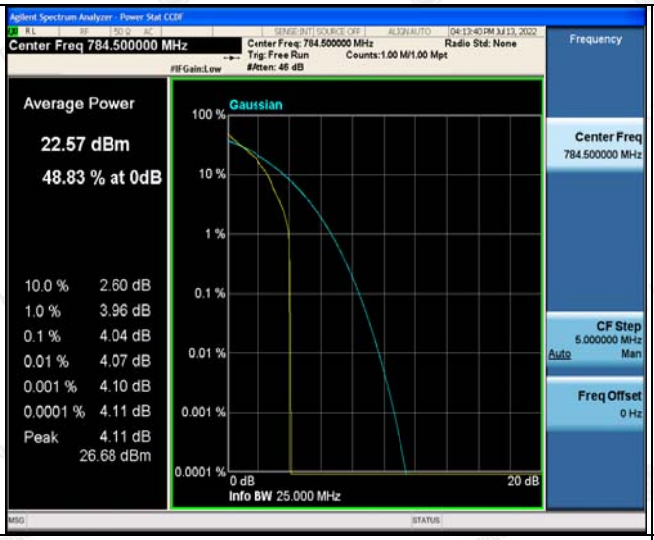	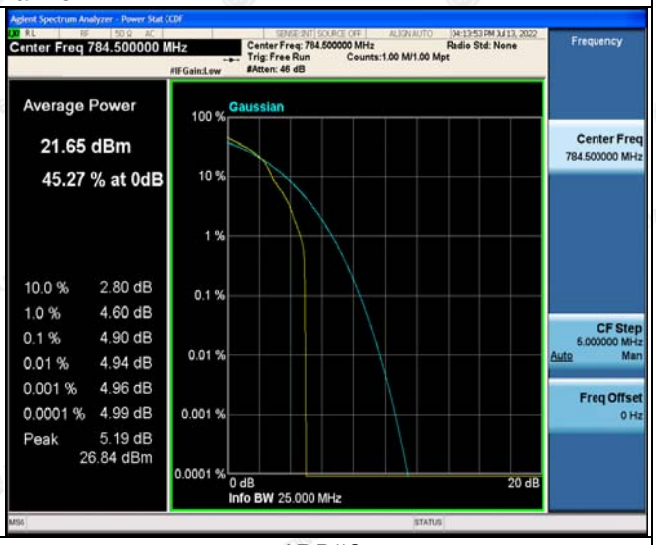
1RB#0	1RB#0
High Channel	

The results shown in this test report refer only to the sample(s) tested unless otherwise stated and the sample(s) are retained for 30 days only. The document is issued by HUAK, this document cannot be reproduced except in full with our prior written permission. The more details and the authenticity of the report will be confirmed at http://www.cer-mark.com.

LTE Band 13-10MHz Channel Bandwidth PAPR	
QPSK	16QAM
1RB#0	1RB#0

The results shown in this test report refer only to the sample(s) tested unless otherwise stated and the sample(s) are retained for 30 days only. The document is issued by HUAK, this document cannot be reproduced except in full with our prior written permission. The more details and the authenticity of the report will be confirmed at http://www.cer-mark.com.

3.4 Occupied Bandwidth and Emission Bandwidth

LIMIT

N/A

TEST CONFIGURATION

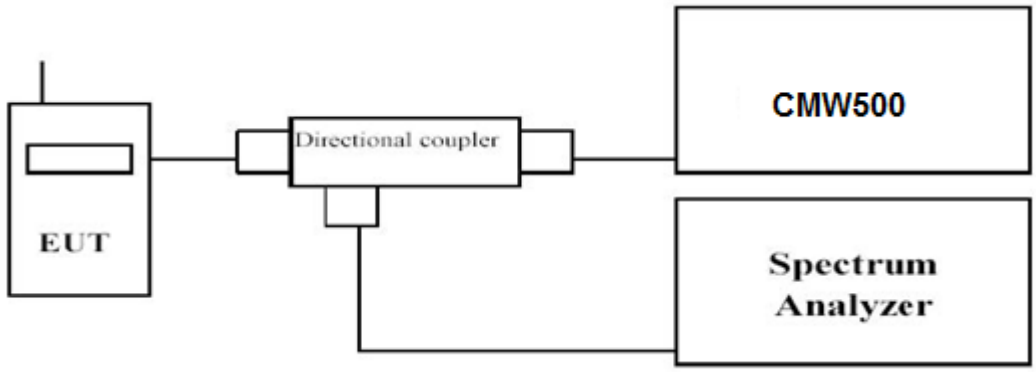

TEST PROCEDURE

The transmitter output was connected to a calibrated coaxial cable and coupler, the other end of which was connected to a spectrum analyzer. The occupied bandwidth was measured with the spectrum analyzer at low, middle and high channel in each band. The -26dBc Emission bandwidth was also measured and recorded.
Set RBW was set to about 1% of emission BW, VBW≥3 times RBW.
-26dBc display line was placed on the screen (or 99% bandwidth), the occupied bandwidth is the delta frequency between the two points where the display line intersects the signal trace.

TEST RESULTS

Remark:

1. *We were tested all RB Configuration refer 3GPP TS136 521 for each Channel Bandwidth of LTE Band 13; recorded worst case for each Channel Bandwidth of LTE Band 13.*

LTE Band 13						
TX Channel Bandwidth	RB Size/Offset	Frequency (MHz)	-26dBc Emission bandwidth (MHz)		99% Occupied bandwidth (MHz)	
			QPSK	16QAM	QPSK	16QAM
5 MHz	*25RB#0*	779.5	5.006	5.025	4.5011	4.5164
		782	5.020	4.976	4.5090	4.5046
		784.5	5.014	5.030	4.4982	4.5082
10 MHz	*50RB#0*	782	9.852	9.850	8.9616	8.9491

The results shown in this test report refer only to the sample(s) tested unless otherwise stated and the sample(s) are retained for 30 days only. The document is issued by HUAK, this document cannot be reproduced except in full with our prior written permission. The more details and the authenticity of the report will be confirmed at http://www.cer-mark.com.

LTE Band 13-5MHz Channel Bandwidth	
QPSK	16QAM
	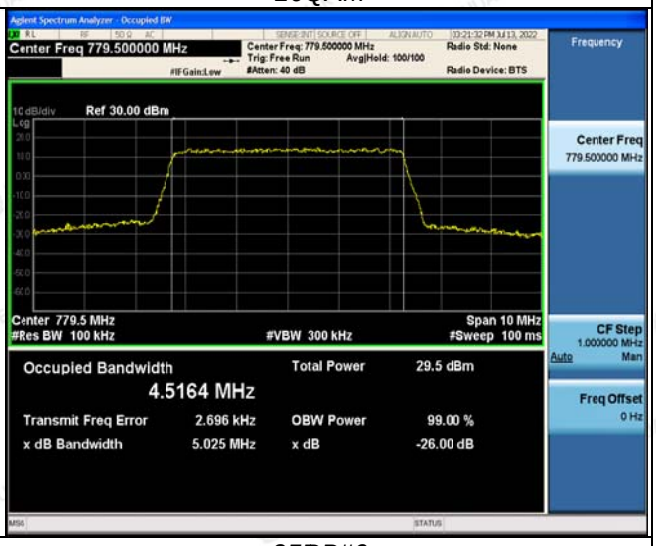
25RB#0	25RB#0
Low Channel	
	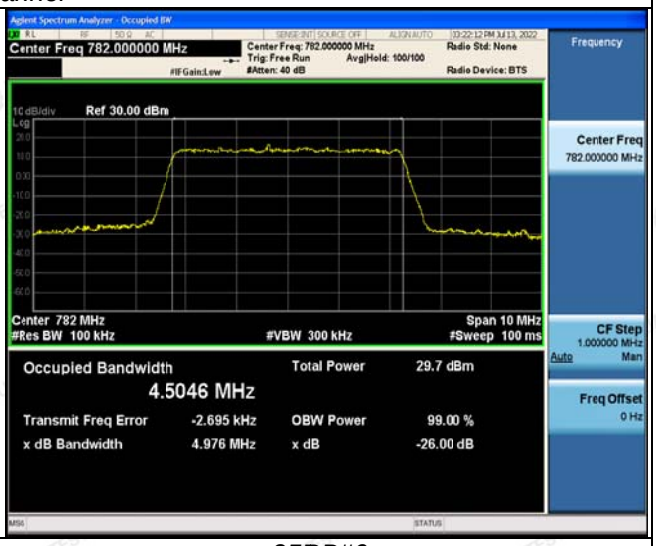
25RB#0	25RB#0
Middle Channel	
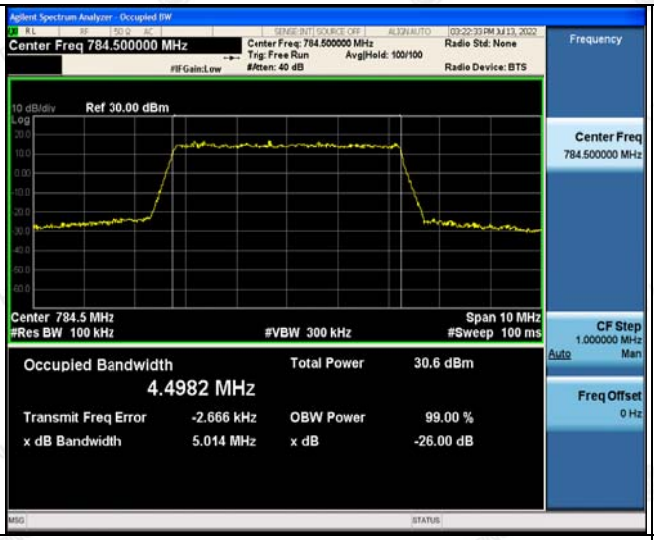	
25RB#0	25RB#0
High Channel	

The results shown in this test report refer only to the sample(s) tested unless otherwise stated and the sample(s) are retained for 30 days only. The document is issued by HUAK, this document cannot be reproduced except in full with our prior written permission. The more details and the authenticity of the report will be confirmed at http://www.cer-mark.com.

LTE Band 13-10MHz Channel Bandwidth	
QPSK	16QAM
	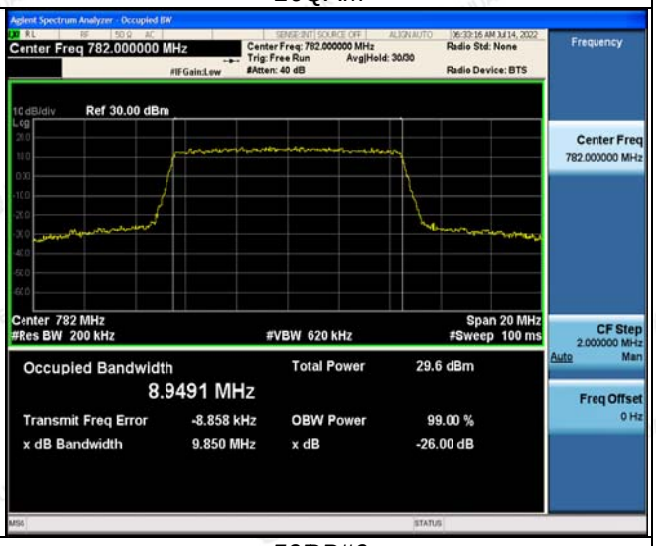
50RB#0	50RB#0

The results shown in this test report refer only to the sample(s) tested unless otherwise stated and the sample(s) are retained for 30 days only. The document is issued by HUAK, this document cannot be reproduced except in full with our prior written permission. The more details and the authenticity of the report will be confirmed at http://www.cer-mark.com.

3.5 Band Edge Compliance

LIMIT

According to §27.53 (c): For operations in the 746-758 MHz band and the 776-788 MHz band, the power of any emission outside the licensee's frequency band(s) of operation shall be attenuated below the transmitter power (P) within the licensed band(s) of operation, measured in watts, in accordance with the following:
(1) On any frequency outside the 746-758 MHz band, the power of any emission shall be attenuated outside the band below the transmitter power (P) by at least 43 + 10 log (P) dB;
(2) On any frequency outside the 776-788 MHz band, the power of any emission shall be attenuated outside the band below the transmitter power (P) by at least 43 + 10 log (P) dB;
(3) On all frequencies between 763-775 MHz and 793-805 MHz, by a factor not less than 76 + 10 log (P) dB in a 6.25 kHz band segment, for base and fixed stations;
(4) On all frequencies between 763-775 MHz and 793-805 MHz, by a factor not less than 65 + 10 log (P) dB in a 6.25 kHz band segment, for mobile and portable stations;

TEST CONFIGURATION

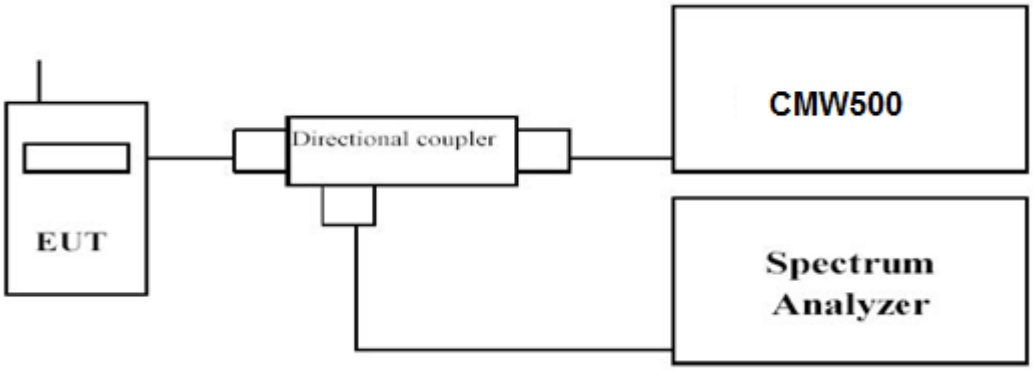

TEST PROCEDURE

1. The transmitter output port was connected to base station.
2. The RF output of EUT was connected to the power meter by RF cable and attenuator, the path loss was compensated to the results for each measurement.
3. Set EUT at maximum power through base station.
4. Select lowest and highest channels for each band and different modulation.
5. Measure Band edge using RMS (Average) detector by spectrum.

TEST RESULTS

Remark:

1. *We were tested all RB Configuration refer 3GPP TS136 521 for each Channel Bandwidth of LTE Band 13; recorded worst case for each Channel Bandwidth of LTE Band 13.*

The results shown in this test report refer only to the sample(s) tested unless otherwise stated and the sample(s) are retained for 30 days only. The document is issued by HUAK, this document cannot be reproduced except in full with our prior written permission. The more details and the authenticity of the report will be confirmed at http://www.cer-mark.com.

LTE Band 13-5MHz Channel Bandwidth Band Edge Compliance	
QPSK	16QAM
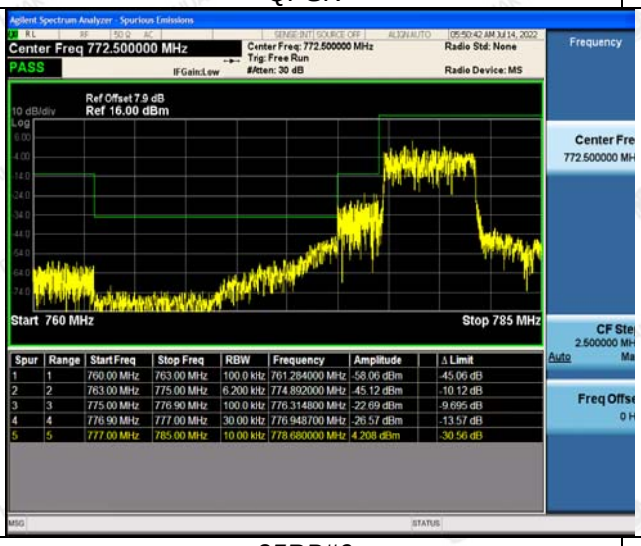	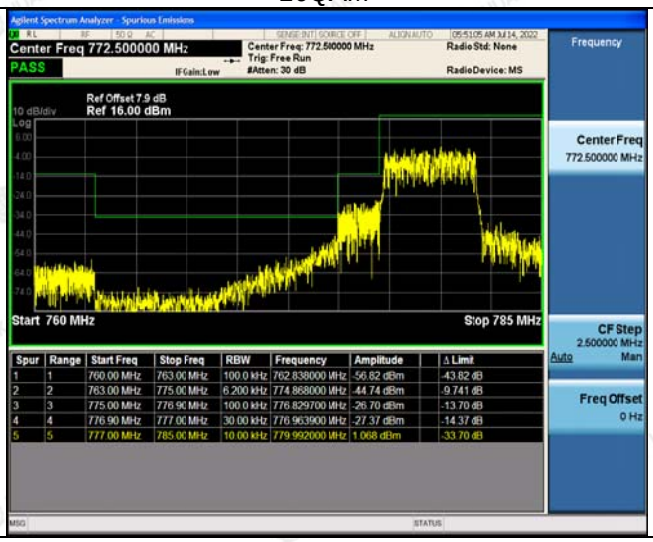
25RB#0	25RB#0
Low Channel	
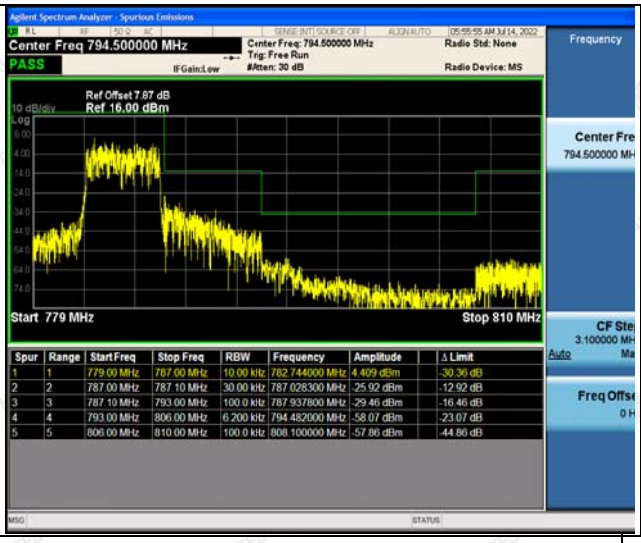	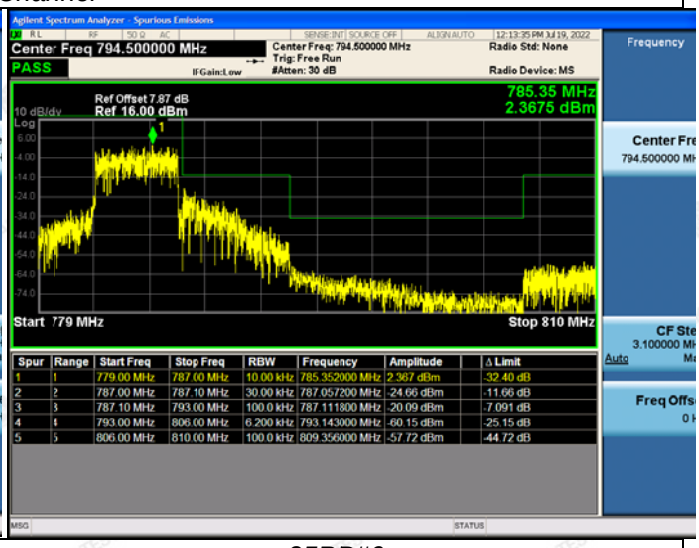
25RB#0	25RB#0
High Channel	

The results shown in this test report refer only to the sample(s) tested unless otherwise stated and the sample(s) are retained for 30 days only. The document is issued by HUAK, this document cannot be reproduced except in full with our prior written permission. The more details and the authenticity of the report will be confirmed at http://www.cer-mark.com.

LTE Band 13-10MHz Channel Bandwidth Band Edge Compliance	
QPSK	16QAM
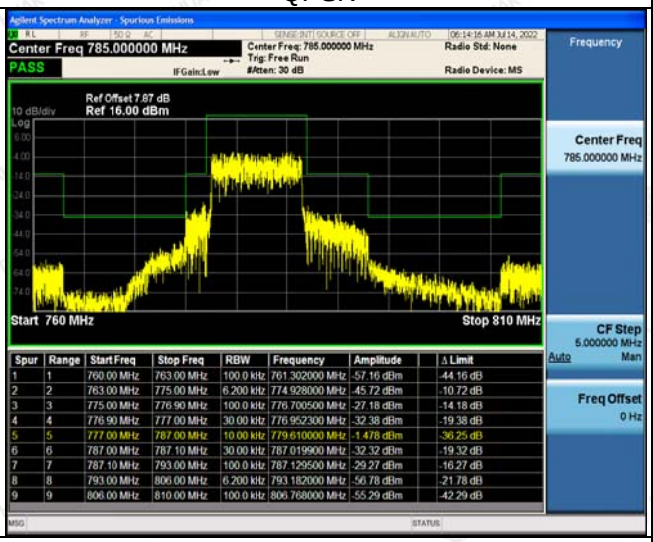	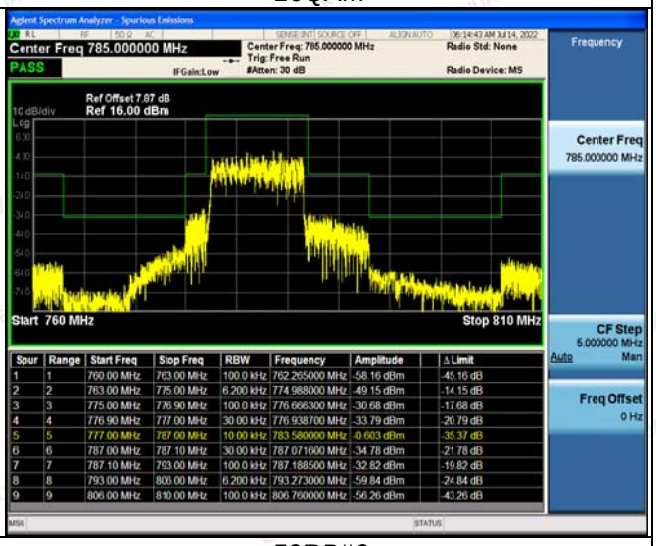
50RB#0	50RB#0

Spur	Range	Start Freq	Stop Freq	RBW	Frequency	Amplitude	Δ Limit
1	1	760.00 MHz	763.00 MHz	100.0 kHz	761.302000 MHz	-57.16 dBm	-44.16 dB
2	2	763.00 MHz	775.00 MHz	6.200 kHz	774.928000 MHz	-45.72 dBm	-10.72 dB
3	3	775.00 MHz	776.90 MHz	100.0 kHz	776.700500 MHz	-27.18 dBm	-14.18 dB
4	4	776.90 MHz	777.00 MHz	30.00 kHz	776.952300 MHz	-32.38 dBm	-19.38 dB
5	5	777.00 MHz	787.00 MHz	10.00 kHz	779.610000 MHz	-1.478 dBm	-36.25 dB
6	6	787.00 MHz	787.10 MHz	30.00 kHz	787.019900 MHz	-32.32 dBm	-19.32 dB
7	7	787.10 MHz	793.00 MHz	100.0 kHz	787.129500 MHz	-29.27 dBm	-16.27 dB
8	8	793.00 MHz	806.00 MHz	6.200 kHz	793.182000 MHz	-56.78 dBm	-21.78 dB
9	9	806.00 MHz	810.00 MHz	100.0 kHz	806.768000 MHz	-55.29 dBm	-42.29 dB

Spur	Range	Start Freq	Stop Freq	RBW	Frequency	Amplitude	Δ Limit
1	1	760.00 MHz	763.00 MHz	100.0 kHz	762.265000 MHz	-58.16 dBm	-45.16 dB
2	2	763.00 MHz	775.00 MHz	6.200 kHz	774.988000 MHz	-49.15 dBm	-14.15 dB
3	3	775.00 MHz	776.90 MHz	100.0 kHz	776.666300 MHz	-30.68 dBm	-17.68 dB
4	4	776.90 MHz	777.00 MHz	30.00 kHz	776.938700 MHz	-33.79 dBm	-20.79 dB
5	5	777.00 MHz	787.00 MHz	10.00 kHz	783.580000 MHz	-0.603 dBm	-35.37 dB
6	6	787.00 MHz	787.10 MHz	30.00 kHz	787.071600 MHz	-34.78 dBm	-21.78 dB
7	7	787.10 MHz	793.00 MHz	100.0 kHz	787.188500 MHz	-32.82 dBm	-19.82 dB
8	8	793.00 MHz	806.00 MHz	6.200 kHz	793.273000 MHz	-59.84 dBm	-24.84 dB
9	9	806.00 MHz	810.00 MHz	100.0 kHz	806.760000 MHz	-56.26 dBm	-43.26 dB

The results shown in this test report refer only to the sample(s) tested unless otherwise stated and the sample(s) are retained for 30 days only. The document is issued by HUAK, this document cannot be reproduced except in full with our prior written permission. The more details and the authenticity of the report will be confirmed at http://www.cer-mark.com.

3.6 Spurious Emission

LIMIT

According to §27.53 (c): For operations in the 746-758 MHz band and the 776-788 MHz band, the power of any emission outside the licensee's frequency band(s) of operation shall be attenuated below the transmitter power (P) within the licensed band(s) of operation, measured in watts, in accordance with the following:
(1) On any frequency outside the 746-758 MHz band, the power of any emission shall be attenuated outside the band below the transmitter power (P) by at least 43 + 10 log (P) dB;
(2) On any frequency outside the 776-788 MHz band, the power of any emission shall be attenuated outside the band below the transmitter power (P) by at least 43 + 10 log (P) dB;
(3) On all frequencies between 763-775 MHz and 793-805 MHz, by a factor not less than 76 + 10 log (P) dB in a 6.25 kHz band segment, for base and fixed stations;
(4) On all frequencies between 763-775 MHz and 793-805 MHz, by a factor not less than 65 + 10 log (P) dB in a 6.25 kHz band segment, for mobile and portable stations;

TEST CONFIGURATION

Conducted Spurious Measurement:

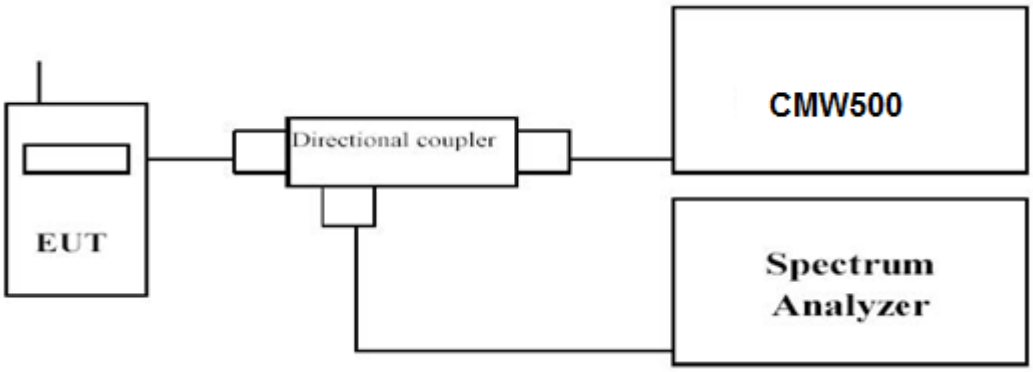

Radiated Spurious Measurement:

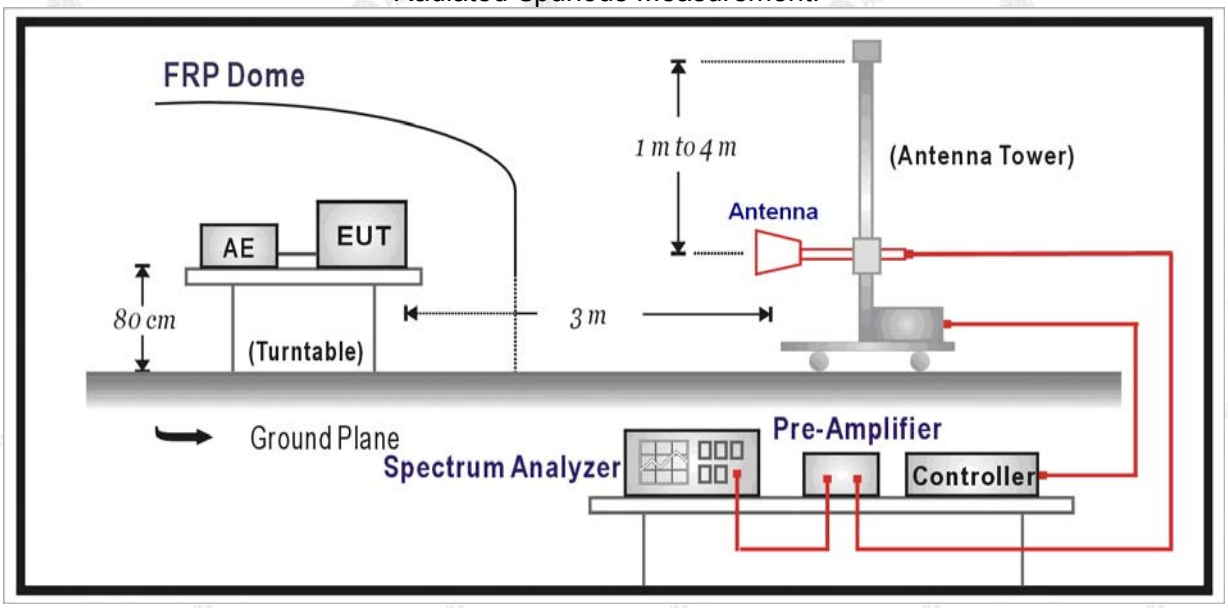

TEST PROCEDURE

The EUT was setup according to EIA/TIA 603D.

The results shown in this test report refer only to the sample(s) tested unless otherwise stated and the sample(s) are retained for 30 days only. The document is issued by HUAK, this document cannot be reproduced except in full with our prior written permission. The more details and the authenticity of the report will be confirmed at http://www.cer-mark.com.

Conducted Spurious Measurement:

a. Place the EUT on a bench and set it in transmitting mode.
b. Connect a low loss RF cable from the antenna port to a spectrum analyzer and CMW500 by a Directional Couple.
c. EUT Communicate with CMW500, then select a channel for testing.
d. Add a correction factor to the display of spectrum, and then test.
e. The resolution bandwidth of the spectrum analyzer was set sufficient scans were taken to show the out of band Emission if any up to10th harmonic.
f. Please refer to following tables for test antenna conducted emissions.

Working Frequency	Sub range (GHz)	RBW	VBW	Sweep time (s)
LTE FDD Band 13	0.000009~0.000015	1KHz	3KHz	Auto
	0.000015~0.03	10KHz	30KHz	Auto
	0.03~26.5	1 MHz	3 MHz	Auto

Radiated Spurious Measurement:

a. The EUT shall be placed at the specified height on a support, and in the position closest to normal use as declared by provider.
b. The test antenna shall be oriented initially for vertical polarization and shall be chosen to correspond to the frequency of the transmitter.
c. The output of the test antenna shall be connected to the measuring receiver.
d. The transmitter shall be switched on and the measuring receiver shall be tuned to the frequency of the transmitter under test.
e. The test antenna shall be raised and lowered through the specified range of height until a maximum signal level is detected by the measuring receiver.
f. The transmitter shall then be rotated through 360° in the horizontal plane, until the maximum signal level is detected by the measuring receiver.
g. The test antenna shall be raised and lowered again through the specified range of height until a maximum signal level is detected by the measuring receiver.
h. The maximum signal level detected by the measuring receiver shall be noted.
i. The transmitter shall be replaced by a substitution antenna.
j. The substitution antenna shall be orientated for vertical polarization and the length of the substitution antenna shall be adjusted to correspond to the frequency of the transmitter.
k. The substitution antenna shall be connected to a calibrated signal generator.
l. If necessary, the input attenuator setting of the measuring receiver shall be adjusted in order to increase the sensitivity of the measuring receiver.
m. The test antenna shall be raised and lowered through the specified range of height to ensure that the maximum signal is received.
n. The input signal to the substitution antenna shall be adjusted to the level that produces a level detected by the measuring receiver, that is equal to the level noted while the transmitter radiated power was measured, corrected for the change of input attenuator setting of the measuring receiver.
o. The measurement shall be repeated with the test antenna and the substitution antenna orientated for horizontal polarization.
p. The measure of the effective radiated power is the larger of the two levels recorded at the input to the substitution antenna, corrected for gain of the substitution antenna if necessary.
q. The resolution bandwidth of the spectrum analyzer was set at 100 kHz for Part 22 and 1MHz for Part 24. The frequency range was checked up to 10th harmonic.
r. Test site anechoic chamber refer to ANSI C63.

TEST RESULTS

Remark:

1. *We were tested all RB Configuration refer 3GPP TS136 521 for each Channel Bandwidth of LTE Band 13; recorded worst case for each Channel Bandwidth of LTE Band 13.*

Conducted Measurement:

The results shown in this test report refer only to the sample(s) tested unless otherwise stated and the sample(s) are retained for 30 days only. The document is issued by HUAK, this document cannot be reproduced except in full with our prior written permission. The more details and the authenticity of the report will be confirmed at http://www.cer-mark.com.

LTE Band 13-5MHz Channel Bandwidth	
Low Channel	
QPSK	*16QAM*
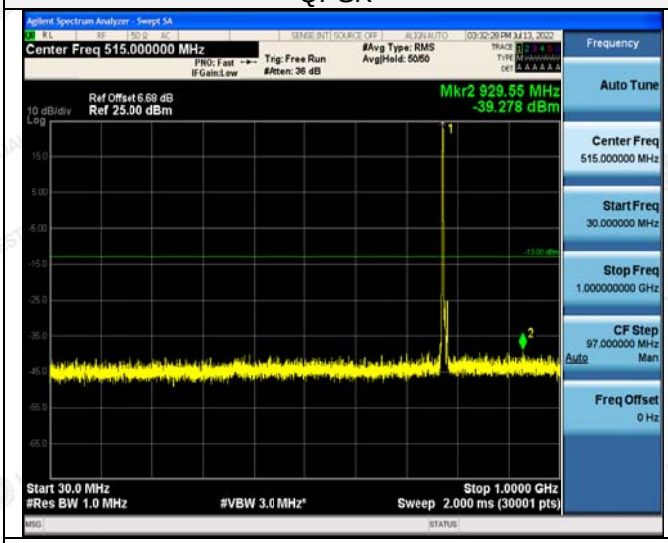	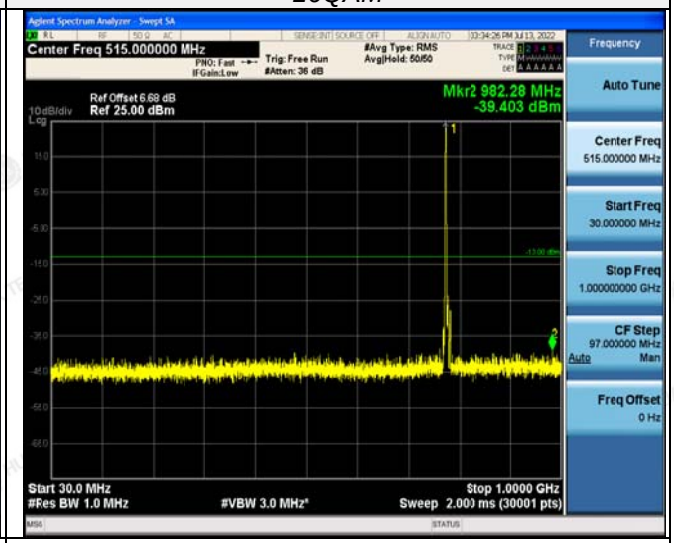
30~1000MHz	30~1000MHz
1000~5000MHz	1000~5000MHz
5000~12000MHz	5000~12000MHz

The results shown in this test report refer only to the sample(s) tested unless otherwise stated and the sample(s) are retained for 30 days only. The document is issued by HUAK, this document cannot be reproduced except in full with our prior written permission. The more details and the authenticity of the report will be confirmed at http://www.cer-mark.com.

12000~26500MHz	12000~26500MHz
1RB#0	*1RB#0*

The results shown in this test report refer only to the sample(s) tested unless otherwise stated and the sample(s) are retained for 30 days only. The document is issued by HUAK, this document cannot be reproduced except in full with our prior written permission. The more details and the authenticity of the report will be confirmed at http://www.cer-mark.com.

LTE Band 13-5MHz Channel Bandwidth	
Middle Channel	
QPSK	16QAM
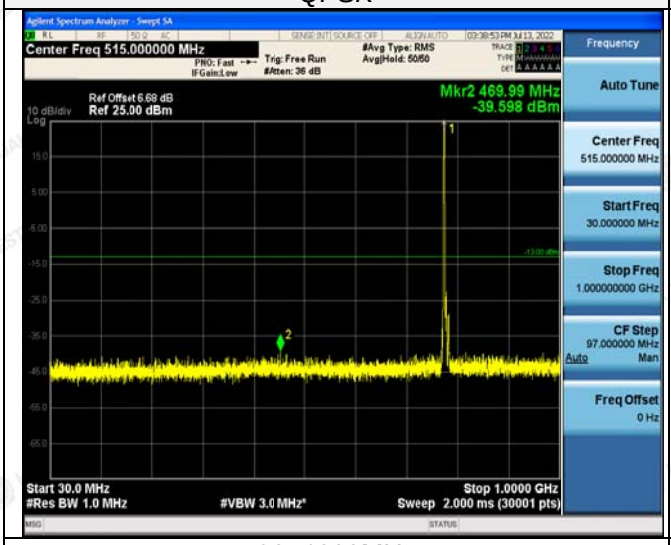	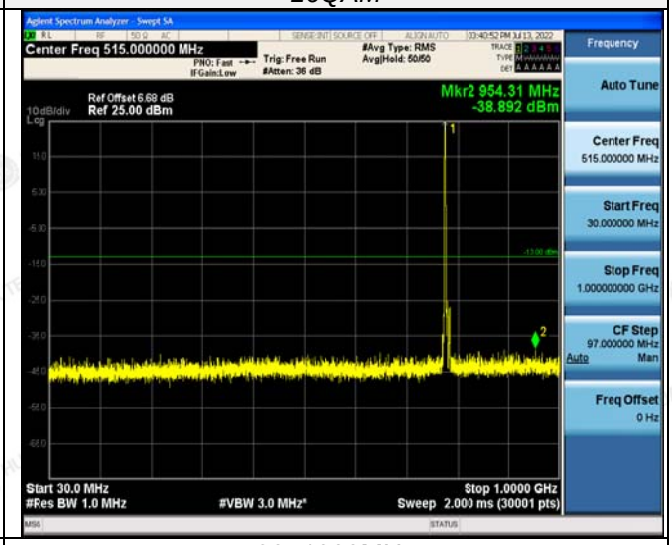
30~1000MHz	30~1000MHz
1000~5000MHz	1000~5000MHz
5000~12000MHz	5000~12000MHz

The results shown in this test report refer only to the sample(s) tested unless otherwise stated and the sample(s) are retained for 30 days only. The document is issued by HUAK, this document cannot be reproduced except in full with our prior written permission. The more details and the authenticity of the report will be confirmed at http://www.cer-mark.com.

12000~26500MHz	12000~26500MHz
1RB#0	*1RB#0*

The results shown in this test report refer only to the sample(s) tested unless otherwise stated and the sample(s) are retained for 30 days only. The document is issued by HUAK, this document cannot be reproduced except in full with our prior written permission. The more details and the authenticity of the report will be confirmed at http://www.cer-mark.com.

LTE Band 13-5MHz Channel Bandwidth	
High Channel	
QPSK	16QAM
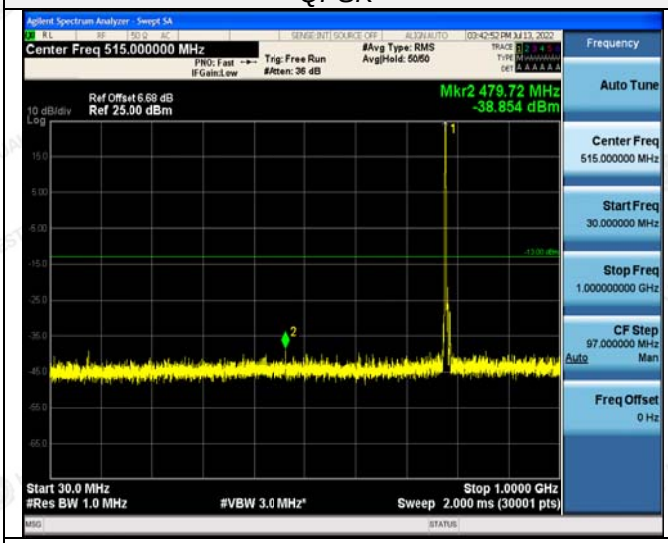	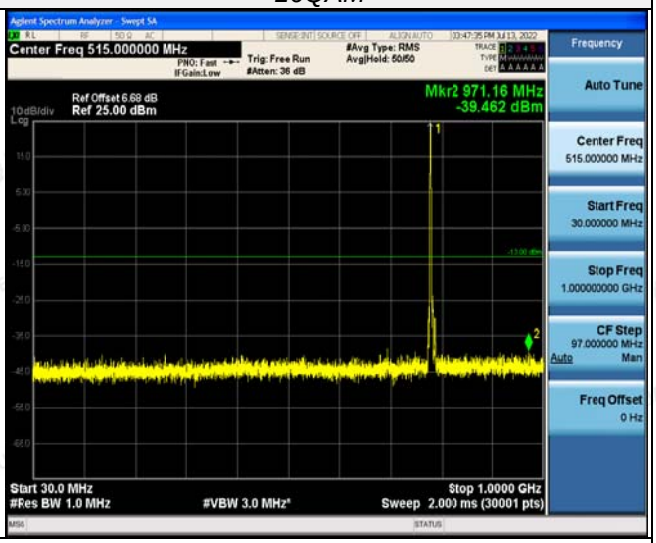
30~1000MHz	30~1000MHz
1000~5000MHz	1000~5000MHz
5000~12000MHz	5000~12000MHz

The results shown in this test report refer only to the sample(s) tested unless otherwise stated and the sample(s) are retained for 30 days only. The document is issued by HUAK, this document cannot be reproduced except in full with our prior written permission. The more details and the authenticity of the report will be confirmed at http://www.cer-mark.com.

12000~26500MHz	12000~26500MHz
1RB#0	*1RB#0*

The results shown in this test report refer only to the sample(s) tested unless otherwise stated and the sample(s) are retained for 30 days only. The document is issued by HUAK, this document cannot be reproduced except in full with our prior written permission. The more details and the authenticity of the report will be confirmed at http://www.cer-mark.com.

LTE Band 13-10MHz Channel Bandwidth	
QPSK	*16QAM*
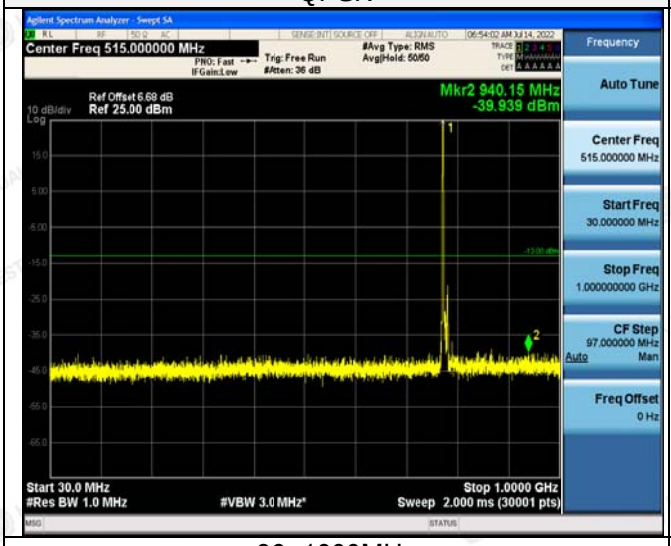	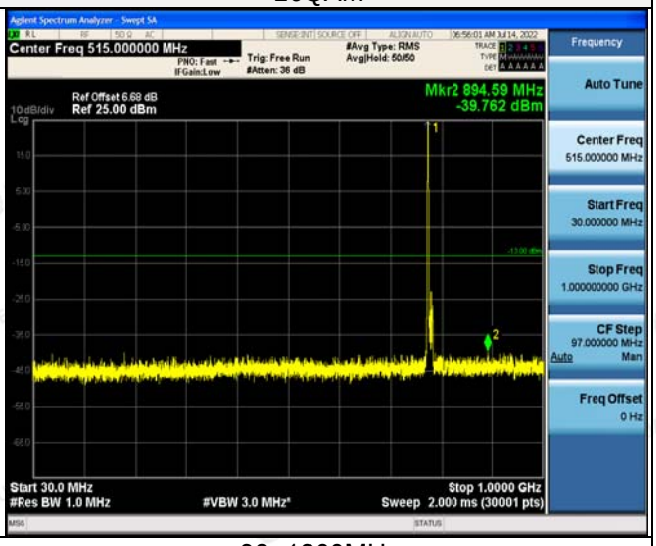
30~1000MHz	30~1000MHz
1000~5000MHz	1000~5000MHz
5000~12000MHz	5000~12000MHz

The results shown in this test report refer only to the sample(s) tested unless otherwise stated and the sample(s) are retained for 30 days only. The document is issued by HUAK, this document cannot be reproduced except in full with our prior written permission. The more details and the authenticity of the report will be confirmed at http://www.cer-mark.com.

12000~26500MHz	12000~26500MHz
1RB#0	*1RB#0*

The results shown in this test report refer only to the sample(s) tested unless otherwise stated and the sample(s) are retained for 30 days only. The document is issued by HUAK, this document cannot be reproduced except in full with our prior written permission. The more details and the authenticity of the report will be confirmed at http://www.cer-mark.com.

Radiated Measurement:

Remark:
1. *We were tested all RB Configuration refer 3GPP TS136 521 for each Channel Bandwidth of LTE FDD Band 13; recorded worst case for each Channel Bandwidth of LTE FDD Band 13.*
2. *EIRP=P_{Mea}(dBm)-P_{cl}(dB) +G_a(dBi)*
3. *We were not recorded other points as values lower than limits.*
4. *Margin = Limit - EIRP*

Radiated Measurement:

Remark:
1. *We were tested all RB Configuration refer 3GPP TS136 521 for each Channel Bandwidth of LTE FDD Band 13; recorded worst case for each Channel Bandwidth of LTE FDD Band 13.*
2. *EIRP=P_{Mea}(dBm)-P_{cl}(dB) +G_a(dBi)*
3. *We were not recorded other points as values lower than limits.*
4. *Margin = Limit - EIRP*

LTE FDD Band 13_Channel Bandwidth 5MHz_QPSK_ Low Channel

Frequency (MHz)	PMea (dBm)	Pcl (dB)	Diatance	Ga Antenna Gain(dB)	Peak EIRP (dBm)	Limit (dBm)	Margin (dB)	Polarization
1559.0	-54.53	4.02	3	12.21	-46.34	-40.00	6.34	H
2338.5	-48.02	5.11	3	13.26	-39.87	-13.00	26.87	H
1559.0	-58.21	4.02	3	12.21	-50.02	-40.00	10.02	V
2338.5	-54.15	5.11	3	13.26	-46	-13.00	33	V

LTE FDD Band 13_Channel Bandwidth 5MHz_QPSK_ Middle Channel

Frequency (MHz)	PMea (dBm)	Pcl (dB)	Diatance	Ga Antenna Gain(dB)	EIRP (dBm)	Limit (dBm)	Margin (dB)	Polarization
1564.0	-53.76	4.02	3	12.21	-45.57	-40.00	5.57	H
2346.0	-47.51	5.11	3	13.26	-39.36	-13.00	26.36	H
1564.0	-58.64	4.02	3	12.21	-50.45	-40.00	10.45	V
2346.0	-54.64	5.11	3	13.26	-46.49	-13.00	33.49	V

LTE FDD Band 13_Channel Bandwidth 5MHz_QPSK_ High Channel

Frequency (MHz)	PMea (dBm)	Pcl (dB)	Diatance	Ga Antenna Gain(dB)	EIRP (dBm)	Limit (dBm)	Margin (dB)	Polarization
1569.0	-53.57	4.02	3	12.21	-45.38	-40.00	5.38	H
2353.5	-47.39	5.11	3	13.26	-39.24	-13.00	26.24	H
1569.0	-59.12	4.02	3	12.21	-50.93	-40.00	10.93	V
2353.5	-54.65	5.11	3	13.26	-46.5	-13.00	33.5	V

LTE FDD Band 13_Channel Bandwidth 10MHz_QPSK_ Middle Channel

Frequency (MHz)	PMea (dBm)	Pcl (dB)	Diatance	Ga Antenna Gain(dB)	EIRP (dBm)	Limit (dBm)	Margin (dB)	Polarization
1564.0	-54.49	4.02	3	12.21	-46.3	-40.00	6.3	H
2346.0	-47.87	5.11	3	13.26	-39.72	-13.00	26.72	H
1564.0	-58.53	4.02	3	12.21	-50.34	-40.00	10.34	V
2346.0	-54.05	5.11	3	13.26	-45.9	-13.00	32.9	V

The results shown in this test report refer only to the sample(s) tested unless otherwise stated and the sample(s) are retained for 30 days only. The document is issued by HUAK, this document cannot be reproduced except in full with our prior written permission. The more details and the authenticity of the report will be confirmed at http://www.cer-mark.com.

LTE FDD Band 13_Channel Bandwidth 5MHz_16QAM _ Middle Channel

Frequency (MHz)	PMea (dBm)	Pcl (dB)	Diatance	Ga Antenna Gain(dB)	EIRP (dBm)	Limit (dBm)	Margin (dB)	Polarization
1564.0	-53.89	4.02	3	12.21	-45.7	-40.00	5.7	H
2346.0	-47.16	5.11	3	13.26	-39.01	-13.00	26.01	H
1564.0	-58.22	4.02	3	12.21	-50.03	-40.00	10.03	V
2346.0	-53.68	5.11	3	13.26	-45.53	-13.00	32.53	V

LTE FDD Band 13_Channel Bandwidth 5MHz_16QAM _ High Channel

Frequency (MHz)	PMea (dBm)	Pcl (dB)	Diatance	Ga Antenna Gain(dB)	EIRP (dBm)	Limit (dBm)	Margin (dB)	Polarization
1569.0	-53.75	4.02	3	12.21	-45.56	-40.00	5.56	H
2353.5	-47.3	5.11	3	13.26	-39.15	-13.00	26.15	H
1569.0	-59.29	4.02	3	12.21	-51.1	-40.00	11.1	V
2353.5	-54.6	5.11	3	13.26	-46.45	-13.00	33.45	V

LTE FDD Band 13_Channel Bandwidth 10MHz_16QAM _ Middle Channel

Frequency (MHz)	PMea (dBm)	Pcl (dB)	Diatance	Ga Antenna Gain(dB)	EIRP (dBm)	Limit (dBm)	Margin (dB)	Polarization
1564.0	-54.37	4.02	3	12.21	-46.18	-40.00	6.18	H
2346.0	-46.77	5.11	3	13.26	-38.62	-13.00	25.62	H
1564.0	-58.86	4.02	3	12.21	-50.67	-40.00	10.67	V
2346.0	-53.31	5.11	3	13.26	-45.16	-13.00	32.16	V

The results shown in this test report refer only to the sample(s) tested unless otherwise stated and the sample(s) are retained for 30 days only. The document is issued by HUAK, this document cannot be reproduced except in full with our prior written permission. The more details and the authenticity of the report will be confirmed at http://www.cer-mark.com.

3.7 Frequency Stability Under Temperature & Voltage Variations

LIMIT

According to §27.54, §2.1055 requirement, the frequency stability shall be sufficient to ensure that the fundamental emissions stay within the authorized bands of operation and should not exceed 2.5ppm.

TEST CONFIGURATION

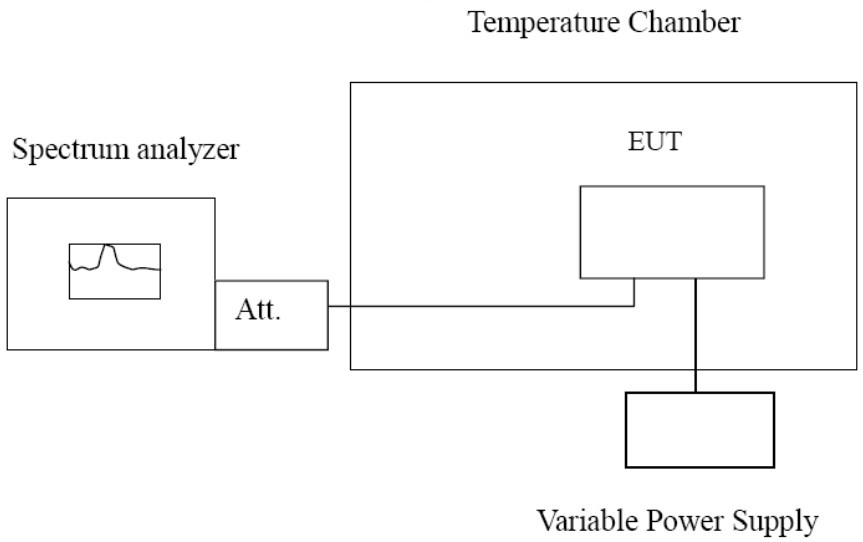

TEST PROCEDURE

The EUT was setup according to EIA/TIA 603D.

Frequency Stability Under Temperature Variations:
In order to measure the carrier frequency under the condition of AFC lock, it is necessary to make measurements with the EUT in a "call mode". This is accomplished with the use of R&S CMW500 DIGITAL RADIO COMMUNICATION TESTER.
1. Measure the carrier frequency at room temperature.
2. Subject the EUT to overnight soak at -30℃.
3. With the EUT, powered via nominal voltage, connected to the CMW500 and in a simulated call on middle channel for LTE Band 13, measure the carrier frequency. These measurements should be made within 2 minutes of Powering up the EUT, to prevent significant self-warming.
4. Repeat the above measurements at 10℃ increments from -30℃ to +50℃. Allow at least 1.5 hours at each temperature, unpowered, before making measurements.
5. Re-measure carrier frequency at room temperature with nominal voltage. Vary supply voltage from minimum voltage to maximum voltage, in 0.1Volt increments re-measuring carrier frequency at each voltage. Pause at nominal voltage for 1.5 hours unpowered, to allow any self-heating to stabilize, before continuing.
6. Subject the EUT to overnight soak at +50℃.
7. With the EUT, powered via nominal voltage, connected to the CMW500 and in a simulated call on the centre channel, measure the carrier frequency. These measurements should be made within 2 minutes of Powering up the EUT, to prevent significant self-warming.
8. Repeat the above measurements at 10 ℃ increments from +50℃ to -30℃. Allow at least 1.5 hours at each temperature, unpowered, before making measurements.
9. At all temperature levels hold the temperature to +/- 0.5℃ during the measurement procedure.

Frequency Stability Under Voltage Variations:
Set chamber temperature to 20℃. Use a variable AC power supply / DC power source to power the EUT and set the voltage to rated voltage. Set the spectrum analyzer RBW low enough to obtain the desired frequency resolution and recorded the frequency.
Reduce the input voltage to specify extreme voltage variation (±15%) and endpoint, record the maximum frequency change.

The results shown in this test report refer only to the sample(s) tested unless otherwise stated and the sample(s) are retained for 30 days only. The document is issued by HUAK, this document cannot be reproduced except in full with our prior written permission. The more details and the authenticity of the report will be confirmed at http://www.cer-mark.com.

TEST RESULTS

Remark:
1. We tested all RB Configuration refer 3GPP TS136 521 for each Channel Bandwidth of LTE Band 13; recorded worst case.

LTE Band 13, 10MHz bandwidth (worst case of all bandwidths)

Frequency Error vs Voltage

Voltage (V)	Frequency error (Hz)		Frequency error (ppm)	
	QPSK	16QAM	QPSK	16QAM
10.2	-4.02	-3.08	-0.005157	-0.003951
12.0	-4.82	-3.58	-0.006183	-0.004593
13.8	-3.59	-5.99	-0.004606	-0.007684

Frequency Error vs Temperature

Temperature (℃)	Frequency error (Hz)		Frequency error (ppm)	
	QPSK	16QAM	QPSK	16QAM
-30°	-2.53	-5.22	-0.003246	-0.006697
-20°	-3.33	-5.81	-0.004272	-0.007453
-10°	-3.60	-2.12	-0.004618	-0.002711
0°	-3.56	-1.43	-0.004567	-0.001829
10°	-3.60	-2.35	-0.004618	-0.003005
20°	-2.85	-1.23	-0.003656	-0.001573
30°	-3.09	1.90	-0.003951	0.002430
40°	-4.02	-2.37	-0.005141	-0.003031
50°	-3.18	-2.69	-0.004066	-0.003440

The results shown in this test report refer only to the sample(s) tested unless otherwise stated and the sample(s) are retained for 30 days only. The document is issued by HUAK, this document cannot be reproduced except in full with our prior written permission. The more details and the authenticity of the report will be confirmed at http://www.cer-mark.com.

4 TEST SETUP PHOTOS OF THE EUT

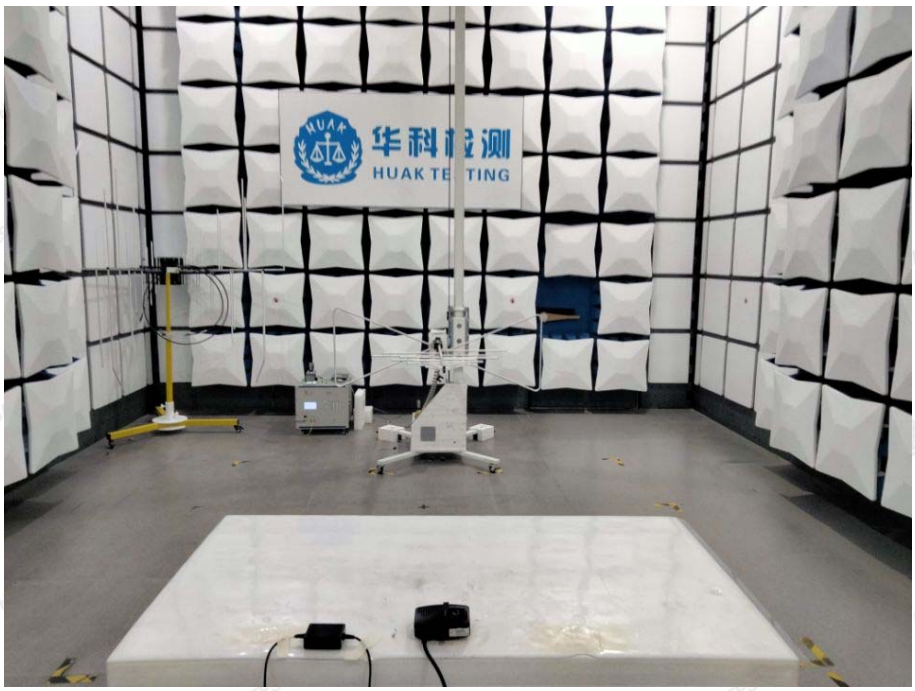

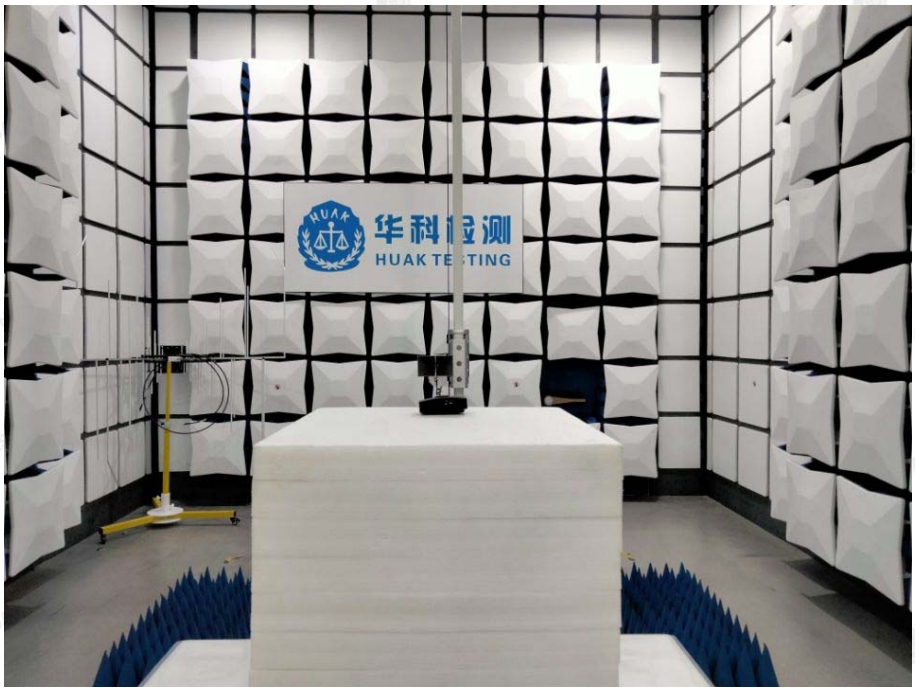

The results shown in this test report refer only to the sample(s) tested unless otherwise stated and the sample(s) are retained for 30 days only. The document is issued by HUAK, this document cannot be reproduced except in full with our prior written permission. The more details and the authenticity of the report will be confirmed at http://www.cer-mark.com.

5 PHOTOS OF THE EUT

Reference to the report: ANNEX A of external photos and ANNEX B of internal photos.

.....End of Report.....

The results shown in this test report refer only to the sample(s) tested unless otherwise stated and the sample(s) are retained for 30 days only. The document is issued by HUAK, this document cannot be reproduced except in full with our prior written permission. The more details and the authenticity of the report will be confirmed at http://www.cer-mark.com.

TEL : +86-755 2302 9901 FAX : +86-755 2302 9901 E-mail : service@cer-mark.com
Add: 1-2F., Building B2, Junfeng Zhongcheng Zhizao Innovation Park, Heping Community, Fuhai Street, Bao'an District, Shenzhen, Guangdong, China