TEST REPORT
FCC CFR Title 47 Part 2, Part 90R

Report Reference No.....:	HK2207012848-8E
FCC ID.....:	2AGBD-HERO-ME40-02
Compiled by (position+printed name+signature)..:	File administrators Gary Qian
Supervised by (position+printed name+signature)..:	Technique principal Eden Hu
Approved by (position+printed name+signature)..:	Manager Jason Zhou
Date of issue.....:	Jul. 19, 2022
Testing Laboratory Name .....:	**Shenzhen HUAK Testing Technology Co., Ltd.**
Address .....:	1-2/F., Building B2, Junfeng Zhongcheng Zhizao Innovation Park, Heping, Fuhai Street, Bao'an District, Shenzhen, Guangdong, China
Applicant's name.....:	**Howen Technologies Co., Ltd.**
Address .....:	6th Floor, Zone B, Jiada Research & Development Building, Songpingshan Rd, Hi-tech Park North, Nanshan, Shenzhen, Guangdong Province, China
Test specification .....:	
Standard .....:	**FCC CFR Title 47 Part 2, Part 90R**
TRF Originator.....:	Shenzhen HUAK Testing Technology Co., Ltd.

Shenzhen HUAK Testing Technology Co., Ltd. All rights reserved.
This publication may be reproduced in whole or in part for non-commercial purposes as long as the Shenzhen HUAK Testing Technology Co., Ltd. as copyright owner and source of the material. Shenzhen HUAK Testing Technology Co., Ltd.takess no responsibility for and will not assume liability for damages resulting from the reader's interpretation of the reproduced material due to its placement and context.

Test item description .....:	Dash Camera
Trade Mark .....:	N/A
Manufacturer.....:	**Howen Technologies Co., Ltd.**
Model/Type reference.....:	Hero-ME40-02
Listed Models .....:	Please refer to page 6 for Serial models
Modulation Type .....:	QPSK, 16QAM
Rating .....:	DC 12V From Power Box
Hardware version .....:	V2.0
Software version .....:	V2.0
Result.....:	**PASS**

The results shown in this test report refer only to the sample(s) tested unless otherwise stated and the sample(s) are retained for 30 days only. The document is issued by HUAK, this document cannot be reproduced except in full with our prior written permission. The more details and the authenticity of the report will be confirmed at http://www.cer-mark.com.

TEST REPORT

Test Report No. :	HK2207012848-8E	Jul. 19, 2022 Date of issue

Equipment under Test	:	Dash Camera
Model /Type	:	Hero-ME40-02
Listed Models	:	Please refer to page 6 for Serial models
Applicant	:	**Howen Technologies Co., Ltd.**
Address	:	6th Floor, Zone B, Jiada Research & Development Building, Songpingshan Rd, Hi-tech Park North, Nanshan, Shenzhen, Guangdong Province, China
Manufacturer	:	**Howen Technologies Co., Ltd.**
Address	:	6th Floor, Zone B, Jiada Research & Development Building, Songpingshan Rd, Hi-tech Park North, Nanshan, Shenzhen, Guangdong Province, China

Test result	Pass

The test report merely corresponds to the test sample.
It is not permitted to copy extracts of these test result without the written permission of the test laboratory.

The results shown in this test report refer only to the sample(s) tested unless otherwise stated and the sample(s) are retained for 30 days only. The document is issued by HUAK, this document cannot be reproduced except in full with our prior written permission. The more details and the authenticity of the report will be confirmed at http://www.cer-mark.com.

Contents

1	**SUMMARY**	**4**
1.1	**TEST STANDARDS**	**4**
1.2	**Test Description**	**4**
1.3	**Information of the Test Laboratory**	**5**
1.4	**Statement of the measurement uncertainty**	**5**
2	**GENERAL INFORMATION**	**6**
2.1	**General Remarks**	**6**
2.2	**Product Description**	**6**
2.3	**Equipment under Test**	**6**
2.4	**Test frequency list**	**6**
2.5	**Environmental conditions**	**7**
2.6	**Description of Test Modes**	**7**
2.7	**Equipments Used during the Test**	**8**
2.8	**Modifications**	**8**
3	**TEST CONDITIONS AND RESULTS**	**9**
3.1	**Output Power**	**9**
3.2	**Peak-to-Average Ratio (PAR)**	**13**
3.3	**Occupied Bandwidth and Emission Bandwidth**	**16**
3.4	**Band Edge compliance**	**19**
3.5	**Spurious Emission**	**22**
3.6	**Frequency Stability under Temperature & Voltage Variations**	**34**
4	**TEST SETUP PHOTOS OF THE EUT**	**36**
5	**PHOTOS OF THE EUT**	**37**

The results shown in this test report refer only to the sample(s) tested unless otherwise stated and the sample(s) are retained for 30 days only. The document is issued by HUAK, this document cannot be reproduced except in full with our prior written permission. The more details and the authenticity of the report will be confirmed at http://www.cer-mark.com.

1 SUMMARY

1.1 TEST STANDARDS

The tests were performed according to following standards:
FCC Part 90 : PRIVATE LAND MOBILE RADIO SERVICES (Subpart R—Regulations Governing the Licensing and Use of Frequencies in the 763-775 and 793-805 MHz Bands)
47 CFR FCC Part 15 Subpart B: - Unintentional Radiators
FCC Part 2: FREQUENCY ALLOCA-TIONS AND RADIO TREATY MAT-TERS; GENERAL RULES AND REG-ULATIONS

1.2 Test Description

Test Item	Section in CFR 47	Result
RF Output Power	Part 2.1046 90.542	Pass
Peak-to-Average Ratio	KDB 971168 D01(5.7)	Pass
99% & -26 dB Occupied Bandwidth	Part 2.1049	Pass
Spurious Emissions at Antenna Terminal	Part 90.543(e)	Pass
Out of band emission, Band Edge	Part 2.1051 Part 90.543	Pass
Frequency stability	part2.1055	Pass

The results shown in this test report refer only to the sample(s) tested unless otherwise stated and the sample(s) are retained for 30 days only. The document is issued by HUAK, this document cannot be reproduced except in full with our prior written permission. The more details and the authenticity of the report will be confirmed at http://www.cer-mark.com.

1.3 Information of the Test Laboratory

Shenzhen HUAK Testing Technology Co., Ltd.
Add.: 1-2/F., Building B2, Junfeng Zhongcheng Zhizao Innovation Park, Heping, Fuhai Street, Bao'an District, Shenzhen, Guangdong, China

Testing Laboratory Authorization：

A2LA Accreditation Code is 4781.01.
FCC Designation Number is CN1229.
Canada IC CAB identifier is CN0045.
CNAS Registration Number is L9589.

1.4 Statement of the measurement uncertainty

The data and results referenced in this document are true and accurate. The reader is cautioned that there may be errors within the calibration limits of the equipment and facilities. The measurement uncertainty was calculated for all measurements listed in this test report acc. to CISPR 16 - 4 „Specification for radio disturbance and immunity measuring apparatus and methods – Part 4: Uncertainty in EMC Measurements“ and is documented in the Shenzhen HUAK Testing Technology Co., Ltd.quality system acc. to DIN EN ISO/IEC 17025. Furthermore, component and process variability of devices similar to that tested may result in additional deviation. The manufacturer has the sole responsibility of continued compliance of the device.

Hereafter the best measurement capability for Shenzhen HUAK Testing Technology Co., Ltd.is reported:

Test	Range	Measurement Uncertainty	Notes
Radiated Emission	30~1000MHz	4.10dB	(1)
Radiated Emission	Above 1GHz	4.32dB	(1)
Conducted Disturbance	0.15~30MHz	3.20dB	(1)

(1) This uncertainty represents an expanded uncertainty expressed at approximately the 95% confidence level using a coverage factor of k=2.

The results shown in this test report refer only to the sample(s) tested unless otherwise stated and the sample(s) are retained for 30 days only. The document is issued by HUAK, this document cannot be reproduced except in full with our prior written permission. The more details and the authenticity of the report will be confirmed at http://www.cer-mark.com.

2 GENERAL INFORMATION

2.1 General Remarks

Date of receipt of test sample	:	Jul. 01, 2022
Testing commenced on	:	Jul. 01, 2022
Testing concluded on	:	Jul. 19, 2022

2.2 Product Description

Name of EUT	Dash Camera
Model/Type reference:	Hero-ME40-02
List Model:	Hero-MA90-01, Hero-MA90-02, Hero-MA90-03, Hero-MA90-04, Hero-ME40-01, Hero-ME40-02, Hero-ME40-03, Hero-ME40-04, Hero-MC30-01, Hero-MC30-02, Hero-MC30-03, Hero-MC30-04
Model Difference:	All model's the function, software and electric circuit are the same, only with a product model named different. Test sample model: Hero-ME40-02.
Power supply:	DC 12V From Power Box
Adapter Information	N/A
Modilation Type	QPSK,16QAM
Antenna Type	Internal Antenna
Operation Frequency Band	LTE Band 14
Operation frequency	LTE Band 14: 788~798 MHz
LTE Release	R8
Extreme temp. Tolerance	-30°C to +50°C
Extreme vol. Limits	N/A

2.3 Equipment under Test

Power supply system utilised

Power supply voltage	:	○	120V/ 60 Hz	○	115V/60Hz
		●	12 V DC	○	24 V DC
		○	Other (specified in blank below)		

2.4 Test frequency list

TX Channel Bandwidth	Frequency (MHz)	channel
5 MHz	790.5	23305
	793	23330
	795.5	23355
10 MHz	/	/
	793	23330
	/	/

The results shown in this test report refer only to the sample(s) tested unless otherwise stated and the sample(s) are retained for 30 days only. The document is issued by HUAK, this document cannot be reproduced except in full with our prior written permission. The more details and the authenticity of the report will be confirmed at http://www.cer-mark.com.

2.5 Environmental conditions

During the measurement the environmental conditions were within the listed ranges:

Normal Temperature:	25°C
Relative Humidity:	55 %
Air Pressure:	101 kPa

2.6 Description of Test Modes

The EUT has been tested under typical operating condition. The CMW500 used to control the EUT staying in continuous transmitting and receiving mode for testing. Regards to the frequency band operation: the lowest、middle and highest frequency of channel were selected to perform the test, then shown on this report.

Note:

1. For the ERP/EIRP and radiated emission test, every axis (X, Y, Z) was verified, and show the worst resulton this report.
2. Test method and refer to 3GPP TS136521.

The results shown in this test report refer only to the sample(s) tested unless otherwise stated and the sample(s) are retained for 30 days only. The document is issued by HUAK, this document cannot be reproduced except in full with our prior written permission. The more details and the authenticity of the report will be confirmed at http://www.cer-mark.com.

2.7 Equipments Used during the Test

Test Equipment	Manufacturer	Model No.	Serial No.	Calibration Date	Calibration Due Date
LISN	ENV216	R&S	HKE-059	2022/02/18	2023/02/17
LISN	R&S	ENV216	HKE-002	2022/02/18	2023/02/17
Broadband antenna	Schwarzbeck	VULB 9163	HKE-012	2022/02/18	2023/02/17
Receiver	R&S	ESCI 7	HKE-010	2022/02/18	2023/02/17
Spectrum analyzer	Agilent	N9020A	HKE-048	2022/02/18	2023/02/17
RF automatic control unit	Tonscend	JS0806-2	HKE-060	2022/02/18	2023/02/17
Horn antenna	Schwarzbeck	9120D	HKE-013	2022/02/18	2023/02/17
Loop antenna	Schwarzbeck	FMZB 1519 B	HKE-014	2022/02/18	2023/02/17
Preamplifier	EMCI	EMC051845SE	HKE-015	2022/02/18	2023/02/17
Preamplifier	Agilent	83051A	HKE-016	2022/02/18	2023/02/17
Temperature and humidity meter	Boyang	HTC-1	HKE-075	2022/02/18	2023/02/17
High pass filter unit	Tonscend	JS0806-F	HKE-055	2022/02/18	2023/02/17
RF cable	Times	1-40G	HKE-034	2022/02/18	2023/02/17
Power meter	Agilent	E4419B	HKE-085	2022/02/18	2023/02/17
Power Sensor	Agilent	E9300A	HKE-086	2022/02/18	2023/02/17
Wireless Communication Test Set	R&S	CMW500	HKE-026	2022/02/18	2023/02/17
Horn Antenna	Schewarzbeck	BBHA 9170	HKE-017	2022/02/18	2023/02/17
High gain antenna	Schwarzbeck	LB-180400KF	HKE-054	2022/02/18	2023/02/17
Horn antenna	Schwarzbeck	9120D	HKE-135	2022/02/18	2023/02/17
High gain antenna	Schwarzbeck	LB-180400KF	HKE-128	2022/02/18	2023/02/17
Broadband antenna	Schwarzbeck	VULB 9163	HKE-087	2022/02/18	2023/02/17
Signal generator	Agilent	E4433B	HKE-120	2022/02/18	2023/02/17
Signal generator	Agilent	E4421B	HKE-121	2022/02/18	2023/02/17

2.8 Modifications

No modifications were implemented to meet testing criteria.

The results shown in this test report refer only to the sample(s) tested unless otherwise stated and the sample(s) are retained for 30 days only. The document is issued by HUAK, this document cannot be reproduced except in full with our prior written permission. The more details and the authenticity of the report will be confirmed at http://www.cer-mark.com.

3 TEST CONDITIONS AND RESULTS

3.1 Output Power

LIMIT

According to Part 90.635 (b) the maximum output power of the transmitter for mobile stations is 100 watts.
90. 542(7) Portable stations (hand-held devices) transmitting in the 758-768 MHz band and the 788-798 MHz band are limited to 3 watts ERP.

TEST CONFIGURATION

Conducted Power Measurement

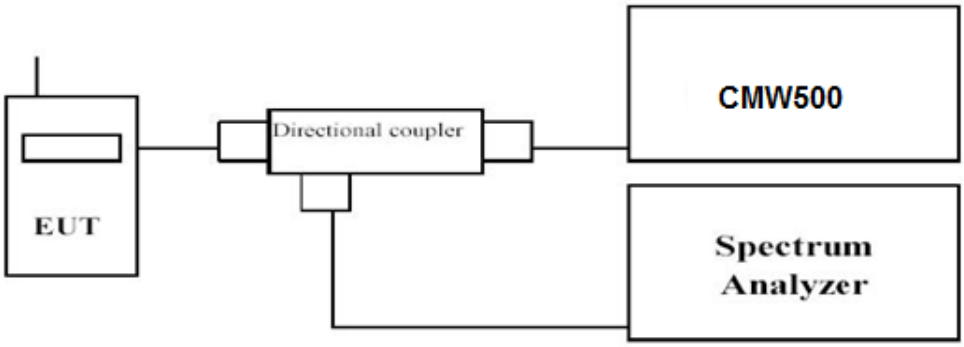

Radiated Power Measurement:

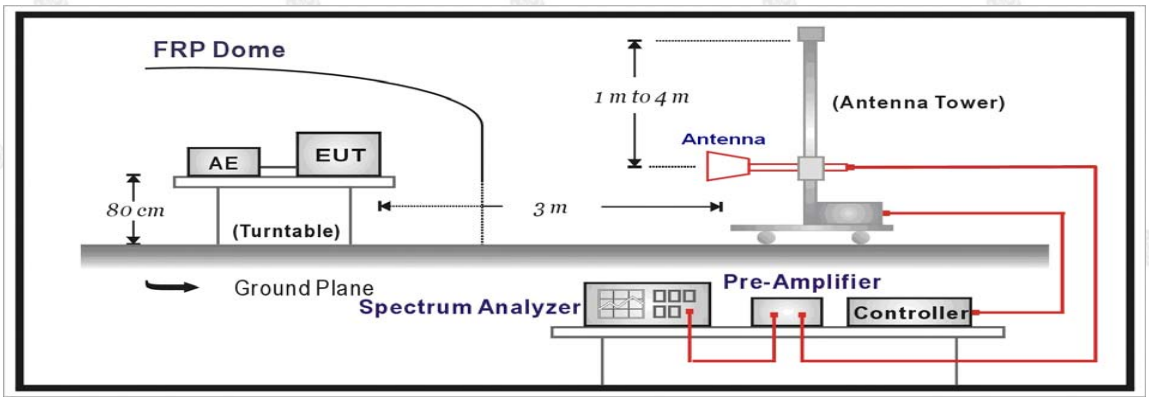

TEST PROCEDURE

The EUT was setup according to EIA/TIA 603D

Conducted Power Measurement:

a) Place the EUT on a bench and set it in transmitting mode.
b) Connect a low loss RF cable from the antenna port to a spectrum analyzer and CMW500 by a Directional Couple.
c) EUT Communicate with CMW500, then select a channel for testing.
d) Add a correction factor to the display of spectrum, and then test.

Radiated Power Measurement:

a. The EUT shall be placed at the specified height on a support, and in the position closest to normal use as declared by provider.
b. The test antenna shall be oriented initially for vertical polarization and shall be chosen to correspond to thefrequency of the transmitter
c. The output of the test antenna shall be connected to the measuring receiver.
d. The transmitter shall be switched on and the measuring receiver shall be tuned to the frequency of the transmitter under test.
e. The test antenna shall be raised and lowered through the specified range of height until a maximum signal

The results shown in this test report refer only to the sample(s) tested unless otherwise stated and the sample(s) are retained for 30 days only. The document is issued by HUAK, this document cannot be reproduced except in full with our prior written permission. The more details and the authenticity of the report will be confirmed at http://www.cer-mark.com.

level is detected by the measuring receiver.

f. The transmitter shall then be rotated through 360° in the horizontal plane, until the maximum signal level is detected by the measuring receiver.
g. The test antenna shall be raised and lowered again through the specified range of height until a maximum signal level is detected by the measuring receiver.
h. The maximum signal level detected by the measuring receiver shall be noted.
i. The transmitter shall be replaced by a substitution antenna.
j. The substitution antenna shall be orientated for vertical polarization and the length of the substitution antenna shall be adjusted to correspond to the frequency of the transmitter.
k. The substitution antenna shall be connected to a calibrated signal generator.
l. If necessary, the input attenuator setting of the measuring receiver shall be adjusted in order to increase the sensitivity of the measuring receiver.
m. The test antenna shall be raised and lowered through the specified range of height to ensure that the maximum signal is received.
n. The input signal to the substitution antenna shall be adjusted to the level that produces a level detected by the measuring receiver, that is equal to the level noted while the transmitter radiated power was measured, corrected for the change of input attenuator setting of the measuring receiver.
o. The measurement shall be repeated with the test antenna and the substitution antenna orientated for horizontal polarization.
p. The measure of the effective radiated power is the larger of the two levels recorded at the input to the substitution antenna, corrected for gain of the substitution antenna if necessary.
q. Test site anechoic chamber refer to ANSI C63.4.

TEST RESULTS

Conducted Measurement:

Band	Bandwidth	Modulation	Channel	RB Configuration	Result(dBm)	Verdict
Band14	5MHz	QPSK	23305	1RB#0	23.54	PASS
Band14	5MHz	QPSK	23305	1RB#12	23.66	PASS
Band14	5MHz	QPSK	23305	1RB#24	23.64	PASS
Band14	5MHz	QPSK	23305	12RB#13	22.65	PASS
Band14	5MHz	QPSK	23305	12RB#0	22.63	PASS
Band14	5MHz	QPSK	23305	12RB#6	22.62	PASS
Band14	5MHz	QPSK	23305	25RB#0	22.55	PASS
Band14	5MHz	QPSK	23330	1RB#0	23.59	PASS
Band14	5MHz	QPSK	23330	1RB#12	23.56	PASS
Band14	5MHz	QPSK	23330	1RB#24	23.61	PASS
Band14	5MHz	QPSK	23330	12RB#6	22.61	PASS
Band14	5MHz	QPSK	23330	12RB#0	22.61	PASS
Band14	5MHz	QPSK	23330	12RB#13	22.60	PASS
Band14	5MHz	QPSK	23330	25RB#0	22.67	PASS
Band14	5MHz	QPSK	23355	1RB#24	23.44	PASS
Band14	5MHz	QPSK	23355	1RB#12	23.52	PASS
Band14	5MHz	QPSK	23355	1RB#0	23.40	PASS
Band14	5MHz	QPSK	23355	12RB#6	22.53	PASS
Band14	5MHz	QPSK	23355	12RB#0	22.64	PASS
Band14	5MHz	QPSK	23355	12RB#13	22.62	PASS

The results shown in this test report refer only to the sample(s) tested unless otherwise stated and the sample(s) are retained for 30 days only. The document is issued by HUAK, this document cannot be reproduced except in full with our prior written permission. The more details and the authenticity of the report will be confirmed at http://www.cer-mark.com.

Band14	5MHz	QPSK	23355	25RB#0	22.63	PASS
Band14	5MHz	16QAM	23305	1RB#0	22.18	PASS
Band14	5MHz	16QAM	23305	1RB#12	22.44	PASS
Band14	5MHz	16QAM	23305	1RB#24	22.53	PASS
Band14	5MHz	16QAM	23305	12RB#0	21.60	PASS
Band14	5MHz	16QAM	23305	12RB#13	21.39	PASS
Band14	5MHz	16QAM	23305	12RB#6	21.37	PASS
Band14	5MHz	16QAM	23305	25RB#0	21.65	PASS
Band14	5MHz	16QAM	23330	1RB#0	22.45	PASS
Band14	5MHz	16QAM	23330	1RB#12	22.50	PASS
Band14	5MHz	16QAM	23330	1RB#24	22.66	PASS
Band14	5MHz	16QAM	23330	12RB#0	21.81	PASS
Band14	5MHz	16QAM	23330	12RB#13	21.30	PASS
Band14	5MHz	16QAM	23330	12RB#6	21.29	PASS
Band14	5MHz	16QAM	23330	25RB#0	21.63	PASS
Band14	5MHz	16QAM	23355	1RB#12	22.18	PASS
Band14	5MHz	16QAM	23355	1RB#0	22.60	PASS
Band14	5MHz	16QAM	23355	1RB#24	22.23	PASS
Band14	5MHz	16QAM	23355	12RB#13	21.69	PASS
Band14	5MHz	16QAM	23355	12RB#6	21.55	PASS
Band14	5MHz	16QAM	23355	12RB#0	21.54	PASS
Band14	5MHz	16QAM	23355	25RB#0	21.66	PASS
Band14	10MHz	QPSK	23330	1RB#0	23.19	PASS
Band14	10MHz	QPSK	23330	1RB#49	23.73	PASS
Band14	10MHz	QPSK	23330	1RB#24	23.50	PASS
Band14	10MHz	QPSK	23330	25RB#0	22.70	PASS
Band14	10MHz	QPSK	23330	25RB#25	22.69	PASS
Band14	10MHz	QPSK	23330	25RB#12	22.69	PASS
Band14	10MHz	QPSK	23330	50RB#0	22.63	PASS
Band14	10MHz	16QAM	23330	1RB#49	22.48	PASS
Band14	10MHz	16QAM	23330	1RB#24	22.90	PASS
Band14	10MHz	16QAM	23330	1RB#0	22.66	PASS
Band14	10MHz	16QAM	23330	25RB#12	21.75	PASS
Band14	10MHz	16QAM	23330	25RB#0	21.76	PASS
Band14	10MHz	16QAM	23330	25RB#25	21.76	PASS
Band14	10MHz	16QAM	23330	50RB#0	21.71	PASS

The results shown in this test report refer only to the sample(s) tested unless otherwise stated and the sample(s) are retained for 30 days only. The document is issued by HUAK, this document cannot be reproduced except in full with our prior written permission. The more details and the authenticity of the report will be confirmed at http://www.cer-mark.com.

Radiated Measurement:

Remark:

1. *We were tested all RB Configuration refer 3GPP TS136 521 for each Channel Bandwidth of LTE FDD Band 14; recorded worst case for each Channel Bandwidth of LTE FDD Band 14.*
2. *EIRP=P_{Mea}(dBm)-P_{cl}(dB)+P_{Ag}(dB)+G_a(dBi), EIRP= ERP+2.15*

LTE FDD Band 14_Channel Bandwidth 5MHz_QPSK

Frequency (MHz)	P_{Mea} (dBm)	P_{cl} (dB)	G_a Antenna Gain(dB)	Correction (dB)	EIRP (dBm)	ERP (dBm)	Limit (dBm)	Margin (dB)	Polarization
790.5	-18	3.06	9.68	34.8	23.42	21.27	34.77	13.5	V
793.0	-17.48	3.17	9.68	34.8	23.83	21.68	34.77	13.09	V
795.5	-16.67	3.22	9.75	34.8	24.66	22.51	34.77	12.26	V
790.5	-17.77	3.06	9.68	34.8	23.65	21.5	34.77	13.27	H
793.0	-17.31	3.17	9.68	34.8	24	21.85	34.77	12.92	H
795.5	-18.13	3.22	9.75	34.8	23.2	21.05	34.77	13.72	H

LTE FDD Band 14_Channel Bandwidth 10MHz_QPSK

Frequency (MHz)	P_{Mea} (dBm)	P_{cl} (dB)	G_a Antenna Gain(dB)	Correction (dB)	EIRP (dBm)	ERP (dBm)	Limit (dBm)	Margin (dB)	Polarization
793.0	-17.19	3.22	9.75	34.8	24.14	21.99	34.77	12.78	V
793.0	-18.01	3.06	9.68	34.8	23.41	21.26	34.77	13.51	H

LTE FDD Band 14_Channel Bandwidth 5MHz_16QAM

Frequency (MHz)	P_{Mea} (dBm)	P_{cl} (dB)	G_a Antenna Gain(dB)	Correction (dB)	EIRP (dBm)	ERP (dBm)	Limit (dBm)	Margin (dB)	Polarization
790.5	-16.92	3.06	9.68	34.8	24.5	22.35	34.77	12.42	V
793.0	-17.49	3.17	9.68	34.8	23.82	21.67	34.77	13.1	V
795.5	-17.3	3.22	9.75	34.8	24.03	21.88	34.77	12.89	V
790.5	-18.45	3.06	9.68	34.8	22.97	20.82	34.77	13.95	H
793.0	-17.56	3.17	9.68	34.8	23.75	21.6	34.77	13.17	H
795.5	-17.57	3.22	9.75	34.8	23.76	21.61	34.77	13.16	H

LTE FDD Band 14_Channel Bandwidth 10MHz_16QAM

Frequency (MHz)	P_{Mea} (dBm)	P_{cl} (dB)	G_a Antenna Gain(dB)	Correction (dB)	EIRP (dBm)	ERP (dBm)	Limit (dBm)	Margin (dB)	Polarization
793.0	-16.65	3.22	9.75	34.8	24.68	22.53	34.77	12.24	V
793.0	-18.36	3.06	9.68	34.8	23.06	20.91	34.77	13.86	H

The results shown in this test report refer only to the sample(s) tested unless otherwise stated and the sample(s) are retained for 30 days only. The document is issued by HUAK, this document cannot be reproduced except in full with our prior written permission. The more details and the authenticity of the report will be confirmed at http://www.cer-mark.com.

3.2 Peak-to-Average Ratio (PAR)

LIMIT

The Peak-to-Average Ratio (PAR) of the transmission may not exceed 13 dB.

TEST CONFIGURATION

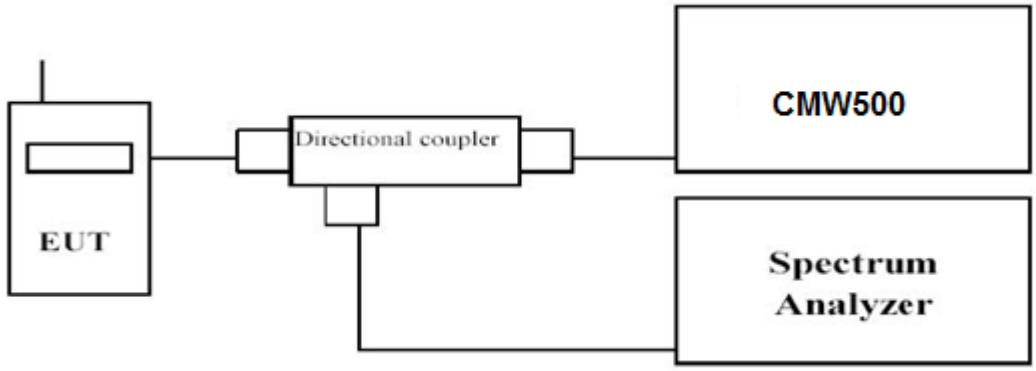

TEST PROCEDURE

1. Refer to instrument's analyzer instruction manual for details on how to use the power statistics/CCDF function;
2. Set resolution/measurement bandwidth ≥ signal's occupied bandwidth;
3. Set the number of counts to a value that stabilizes the measured CCDF curve;
4. Set the measurement interval as follows:
   1). for continuous transmissions, set to 1 ms,
   2). for burst transmissions, employ an external trigger that is synchronized with the EUT burst timing sequence, or use the internal burst trigger with a trigger level that allows the burst to stabilize and set the measurement interval to a time that is less than or equal to the burst duration.
5. Record the maximum PAPR level associated with a probability of 0.1%.

TEST RESULTS

Remark:

1. *We were tested all RB Configuration refer 3GPP TS136 521 for each Channel Bandwidth of LTE Band 14; recorded worst case for each Channel Bandwidth of LTE Band 14.*

LTE Band 14				
TX Channel Bandwidth	Frequency (MHz)	RB Size/Offset	PAPR (dB)	
			QPSK	16QAM
5 MHz	790.5	*1RB#0*	4.31	5.31
	793		4.37	5.26
	795.5		8.46	5.14
10 MHz	793	*1RB#0*	4.31	5.18

The results shown in this test report refer only to the sample(s) tested unless otherwise stated and the sample(s) are retained for 30 days only. The document is issued by HUAK, this document cannot be reproduced except in full with our prior written permission. The more details and the authenticity of the report will be confirmed at http://www.cer-mark.com.

LTE Band 14-5MHz Channel Bandwidth PAPR	
QPSK	16QAM
1RB#0	1RB#0
Low Channel	
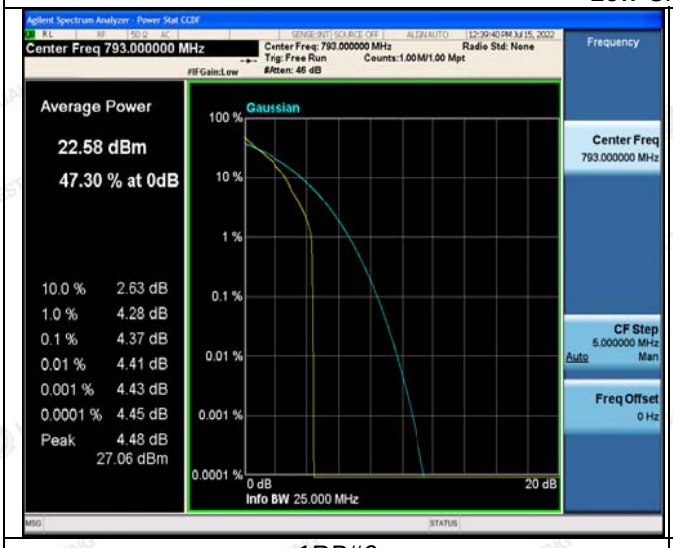	
1RB#0	1RB#0
Middle Channel	
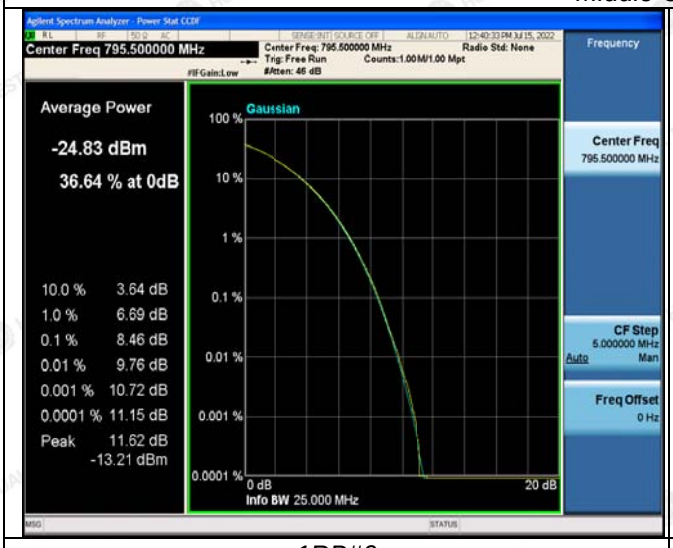	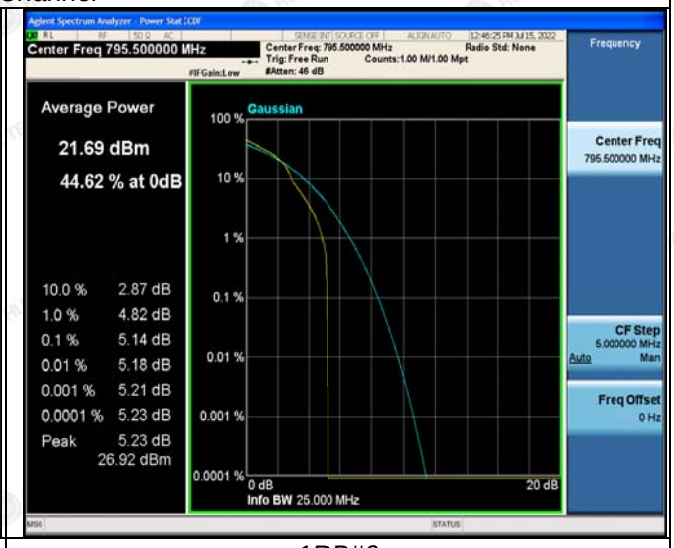
1RB#0	1RB#0
High Channel	

The results shown in this test report refer only to the sample(s) tested unless otherwise stated and the sample(s) are retained for 30 days only. The document is issued by HUAK, this document cannot be reproduced except in full with our prior written permission. The more details and the authenticity of the report will be confirmed at http://www.cer-mark.com.

LTE Band 14-10MHz Channel Bandwidth PAPR	
QPSK	16QAM
	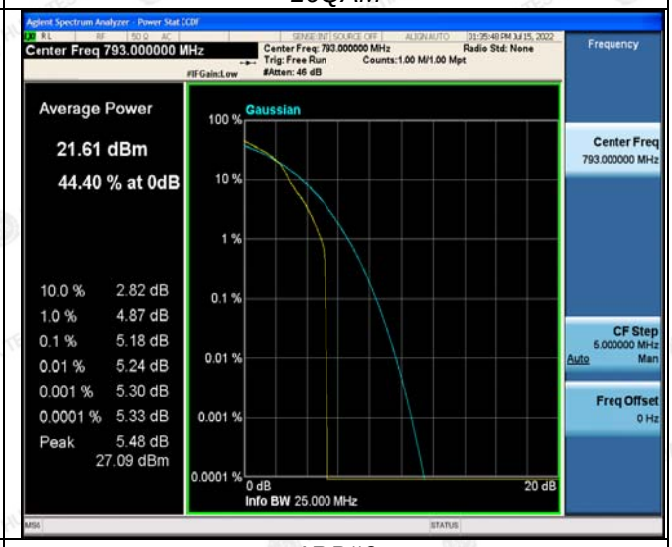
1RB#0	1RB#0

The results shown in this test report refer only to the sample(s) tested unless otherwise stated and the sample(s) are retained for 30 days only. The document is issued by HUAK, this document cannot be reproduced except in full with our prior written permission. The more details and the authenticity of the report will be confirmed at http://www.cer-mark.com.

3.3 Occupied Bandwidth and Emission Bandwidth

LIMIT

No specific occupied bandwidth requirements in part 2.1049.
Part 90.209 (a) Each authorization issued to a station licensed under this part will show an emission desiçnator representing the class of emission authorized. The designator will be prefixed by a specified necessary bandwidth. This number does not necessarily indicate the bandwidth occupied by the emission at any instant. In those cases where part 2.202 of this chapter does not provide a formula for the computation of necessary bandwidth, the occupied bandwidth, as defined in part 2 of this chapter, may be used in lieu of the necessary bandwidth.

TEST CONFIGURATION

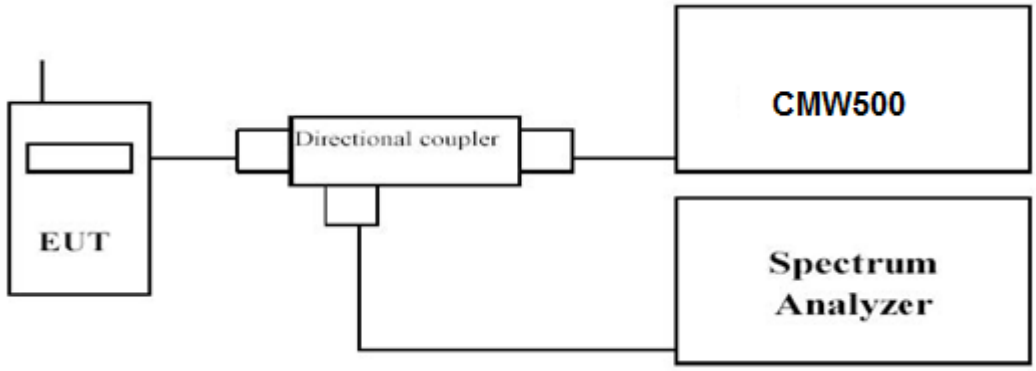

TEST PROCEDURE

The transmitter output was connected to a calibrated coaxial cable and coupler, the other end of which was connected to a spectrum analyzer. The occupied bandwidth was measured with the spectrum analyzer at low, middle and high channel in each band. The -26dBc Emission bandwidth was also measured and recorded.
Set RBW was set to about 1% of emission BW, VBW≥3 times RBW.
-26dBc display line was placed on the screen (or 99% bandwidth), the occupied bandwidth is the delta frequency between the two points where the display line intersects the signal trace.

TEST RESULTS

Remark:

1. *We were tested all RB Configuration refer 3GPP TS136 521 for each Channel Bandwidth of LTE Band 14; recorded worst case for each Channel Bandwidth of LTE Band 14.*

LTE Band 14						
TX Channel Bandwidth	RB Size/Offset	Frequency (MHz)	-26dBc Emission bandwidth (MHz)		99% Occupied bandwidth (MHz)	
			QPSK	16QAM	QPSK	16QAM
5 MHz	*25RB#0*	790.5	5.030	5.001	4.5131	4.5028
		793	4.994	5.038	4.5058	4.5209
		795.5	5.014	4.986	4.5044	4.4991
10 MHz	*50RB#0*	793	9.915	9.777	8.9527	8.9588

The results shown in this test report refer only to the sample(s) tested unless otherwise stated and the sample(s) are retained for 30 days only. The document is issued by HUAK, this document cannot be reproduced except in full with our prior written permission. The more details and the authenticity of the report will be confirmed at http://www.cer-mark.com.

LTE Band 14-5MHz Channel Bandwidth

QPSK	*16QAM*
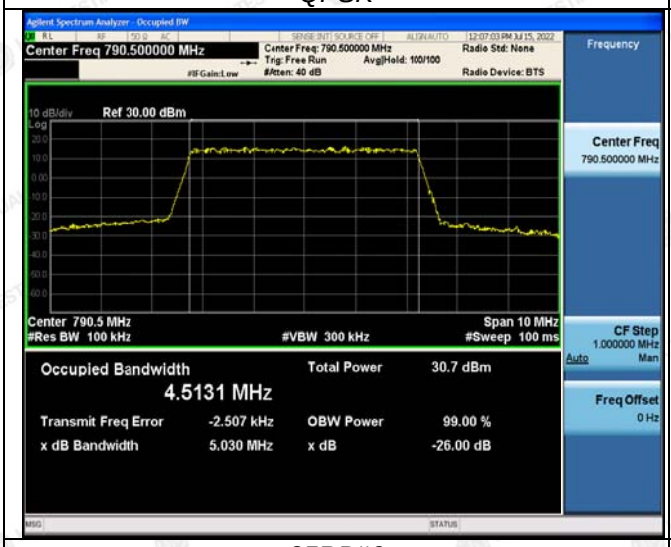	
25RB#0	*25RB#0*

Low Channel

25RB#0	*25RB#0*

Middle Channel

	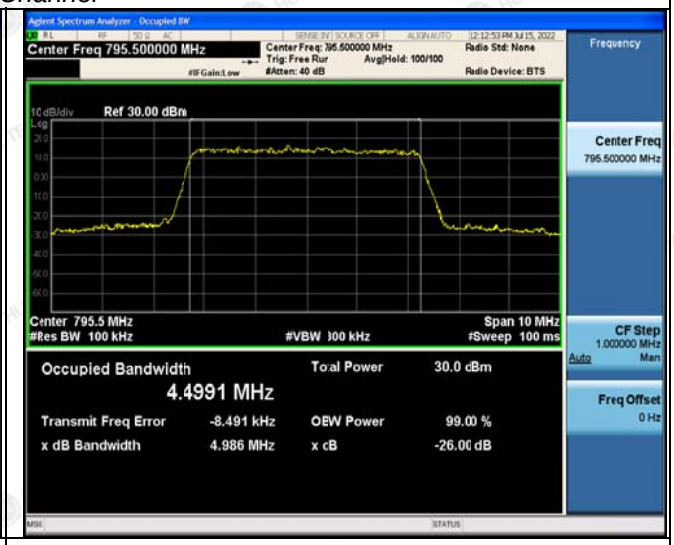
25RB#0	*25RB#0*

High Channel

The results shown in this test report refer only to the sample(s) tested unless otherwise stated and the sample(s) are retained for 30 days only. The document is issued by HUAK, this document cannot be reproduced except in full with our prior written permission. The more details and the authenticity of the report will be confirmed at http://www.cer-mark.com.

LTE Band 14-10MHz Channel Bandwidth	
QPSK	16QAM
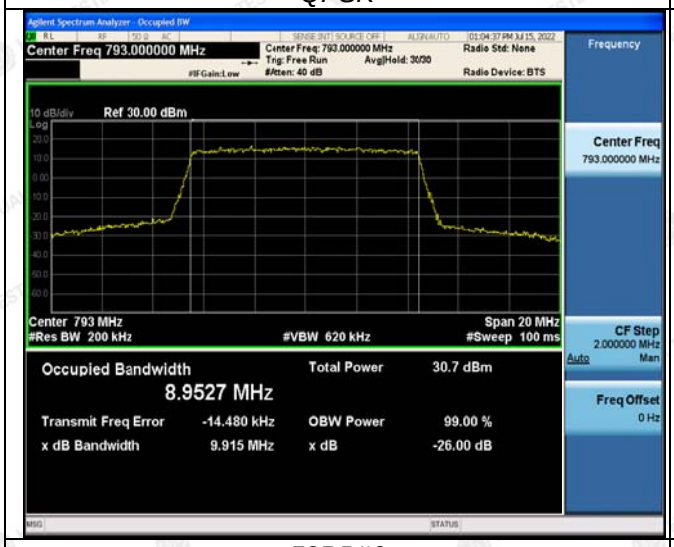	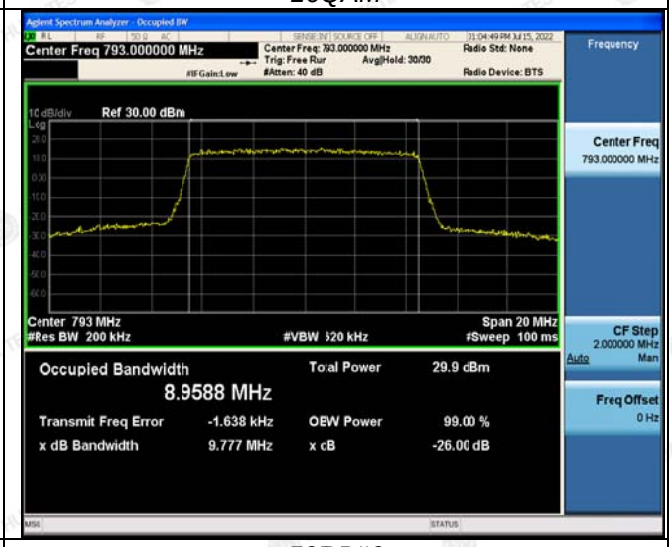
50RB#0	50RB#0

The results shown in this test report refer only to the sample(s) tested unless otherwise stated and the sample(s) are retained for 30 days only. The document is issued by HUAK, this document cannot be reproduced except in full with our prior written permission. The more details and the authenticity of the report will be confirmed at http://www.cer-mark.com.

3.4 Band Edge compliance

LIMIT

90.543 Emission limitations (e) For operations in the 758-768 MHz and the 788-798 MHz bands, the power of any emission outside the licensee's frequency band(s) of operation shall be attenuated below the transmitter power (P) within the licensed band(s) of operation, measured in watts, in accordance with the following:

(1) On all frequencies between 769-775 MHz and 799-805 MHz, by a factor not less than 76 + 10 log (P) dB in a 6.25 kHz band segment, for base and fixed stations.

(2) On all frequencies between 769-775 MHz and 799-805 MHz, by a factor not less than 65 + 10 log (P) dB in a 6.25 kHz band segment, for mobile and portable stations.

(3) On any frequency between 775-788 MHz, above 805 MHz, and below 758 MHz, by at least 43 + 10 log (P) dB.

(4) Compliance with the provisions of paragraphs (e)(1) and (2) of this section is based on the use of measurement instrumentation such that the reading taken with any resolution bandwidth setting should be adjusted to indicate spectral energy in a 6.25 kHz segment.

(5) Compliance with the provisions of paragraph (e)(3) of this section is based on the use of measurement instrumentation employing a resolution bandwidth of 100 kHz or greater. However, in the 100 kHz bands immediately outside and adjacent to the frequency block, a resolution bandwidth of 30 kHz may be employed.

(f) For operations in the 758-775 MHz and 788-805 MHz bands, all emissions including harmonics in the band 1559-1610 MHz shall be limited to −70 dBW/MHz equivalent isotropically radiated power (EIRP) for wideband signals, and −80 dBW EIRP for discrete emissions of less than 700 Hz bandwidth. For the purpose of equipment authorization, a transmitter shall be tested with an antenna that is representative of the type that will be used with the equipment in normal operation.

TEST CONFIGURATION

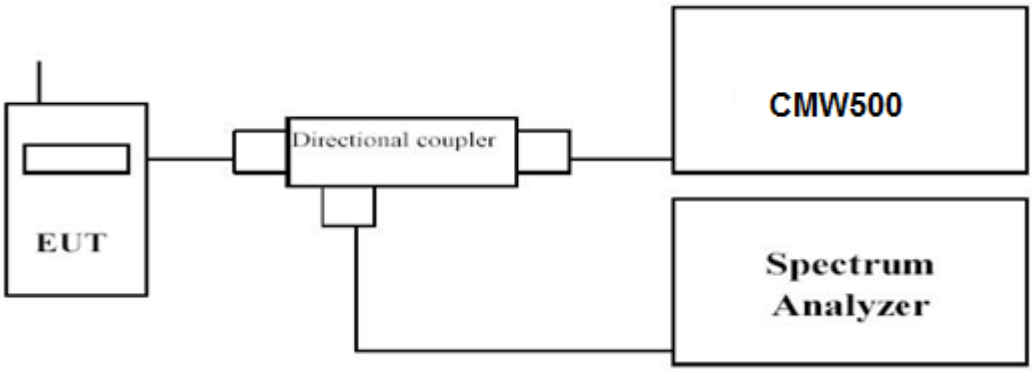

TEST PROCEDURE

1. The transmitter output port was connected to base station.
2. The RF output of EUT was connected to the power meter by RF cable and attenuator, the path loss was compensated to the results for each measurement.
3. Set EUT at maximum power through base station.
4. Select lowest and highest channels for each band and different modulation.
5. Measure Band edge using RMS (Average) detector by spectrum

TEST RESULTS

Remark:

1. *We were tested all RB Configuration refer 3GPP TS136 521 for each Channel Bandwidth of LTE Band 14; recorded worst case for each Channel Bandwidth of LTE Band 14.*

The results shown in this test report refer only to the sample(s) tested unless otherwise stated and the sample(s) are retained for 30 days only. The document is issued by HUAK, this document cannot be reproduced except in full with our prior written permission. The more details and the authenticity of the report will be confirmed at http://www.cer-mark.com.

LTE Band 14-5MHz Channel Bandwidth Band Edge Compliance	
QPSK	16QAM
25RB#0	25RB#0
Low Channel	
25RB#0	25RB#0
High Channel	

The results shown in this test report refer only to the sample(s) tested unless otherwise stated and the sample(s) are retained for 30 days only. The document is issued by HUAK, this document cannot be reproduced except in full with our prior written permission. The more details and the authenticity of the report will be confirmed at http://www.cer-mark.com.

LTE Band 14-10MHz Channel Bandwidth Band Edge Compliance	
QPSK	16QAM
50RB#0	50RB#0

The results shown in this test report refer only to the sample(s) tested unless otherwise stated and the sample(s) are retained for 30 days only. The document is issued by HUAK, this document cannot be reproduced except in full with our prior written permission. The more details and the authenticity of the report will be confirmed at http://www.cer-mark.com.

3.5 Spurious Emission

LIMIT

90.543 Emission limitations (e) For operations in the 758-768 MHz and the 788-798 MHz bands, the power of any emission outside the licensee's frequency band(s) of operation shall be attenuated below the transmitter power (P) within the licensed band(s) of operation, measured in watts, in accordance with the following:
(1) On all frequencies between 769-775 MHz and 799-805 MHz, by a factor not less than 76 + 10 log (P) dB in a 6.25 kHz band segment, for base and fixed stations.
(2) On all frequencies between 769-775 MHz and 799-805 MHz, by a factor not less than 65 + 10 log (P) dB in a 6.25 kHz band segment, for mobile and portable stations.
(3) On any frequency between 775-788 MHz, above 805 MHz, and below 758 MHz, by at least 43 + 10 log (P) dB.
(4) Compliance with the provisions of paragraphs (e)(1) and (2) of this section is based on the use of measurement instrumentation such that the reading taken with any resolution bandwidth setting should be adjusted to indicate spectral energy in a 6.25 kHz segment.
(5) Compliance with the provisions of paragraph (e)(3) of this section is based on the use of measurement instrumentation employing a resolution bandwidth of 100 kHz or greater. However, in the 100 kHz bands immediately outside and adjacent to the frequency block, a resolution bandwidth of 30 kHz may be employed.
(f) For operations in the 758-775 MHz and 788-805 MHz bands, all emissions including harmonics in the band 1559-1610 MHz shall be limited to −70 dBW/MHz equivalent isotropically radiated power (EIRP) for wideband signals, and −80 dBW EIRP for discrete emissions of less than 700 Hz bandwidth. For the purpose of equipment authorization, a transmitter shall be tested with an antenna that is representative of the type that will be used with the equipment in normal operation.

TEST CONFIGURATION

Conducted Spurious Measurement:

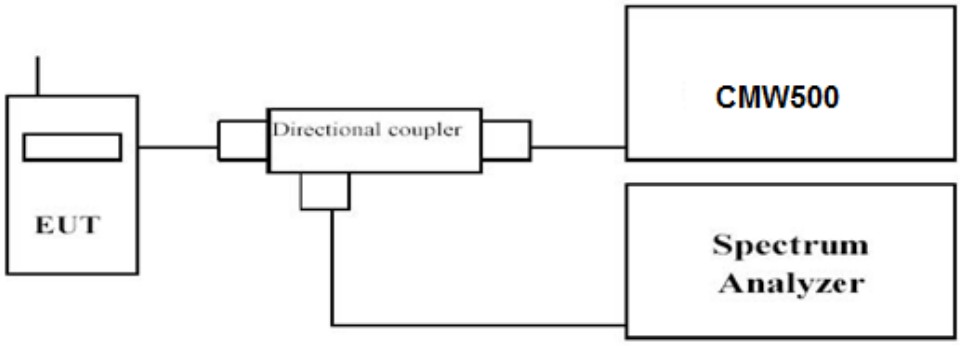

Radiated Spurious Measurement:

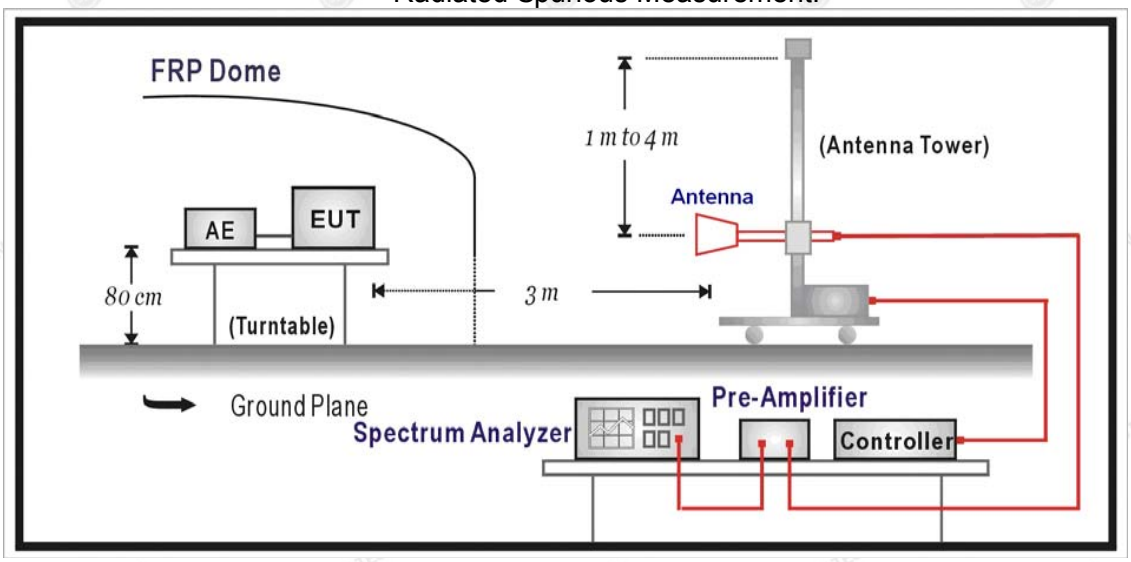

The results shown in this test report refer only to the sample(s) tested unless otherwise stated and the sample(s) are retained for 30 days only. The document is issued by HUAK, this document cannot be reproduced except in full with our prior written permission. The more details and the authenticity of the report will be confirmed at http://www.cer-mark.com.

TEST PROCEDURE

The EUT was setup according to EIA/TIA 603D

Conducted Spurious Measurement:

a. Place the EUT on a bench and set it in transmitting mode.
b. Connect a low loss RF cable from the antenna port to a spectrum analyzer and CMW500 by a Directional Couple.
c. EUT Communicate with CMW500, then select a channel for testing.
d. Add a correction factor to the display of spectrum, and then test.
e. The resolution bandwidth of the spectrum analyzer was set sufficient scans were taken to show the out of band Emission if any up to10th harmonic.
f. Please refer to following tables for test antenna conducted emissions.

Working Frequency	Sub range (GHz)	RBW	VBW	Sweep time (s)
LTE FDD Band 14	0.000009~0.000015	1KHz	3KHz	Auto
	0.000015~0.03	10KHz	30KHz	Auto
	0.03~26.5	1 MHz	3 MHz	Auto

Radiated Spurious Measurement:

a. The EUT shall be placed at the specified height on a support, and in the position closest to normal use as declared by provider.
b. The test antenna shall be oriented initially for vertical polarization and shall be chosen to correspond to the frequency of the transmitter
c. The output of the test antenna shall be connected to the measuring receiver.
d. The transmitter shall be switched on and the measuring receiver shall be tuned to the frequency of the transmitter under test.
e. The test antenna shall be raised and lowered through the specified range of height until a maximum signal level is detected by the measuring receiver.
f. The transmitter shall then be rotated through 360° in the horizontal plane, until the maximum signal level is detected by the measuring receiver.
g. The test antenna shall be raised and lowered again through the specified range of height until a maximum signal level is detected by the measuring receiver.
h. The maximum signal level detected by the measuring receiver shall be noted.
i. The transmitter shall be replaced by a substitution antenna.
j. The substitution antenna shall be orientated for vertical polarization and the length of the substitution antenna shall be adjusted to correspond to the frequency of the transmitter.
k. The substitution antenna shall be connected to a calibrated signal generator.
l. If necessary, the input attenuator setting of the measuring receiver shall be adjusted in order to increase the sensitivity of the measuring receiver.
m. The test antenna shall be raised and lowered through the specified range of height to ensure that the maximum signal is received.
n. The input signal to the substitution antenna shall be adjusted to the level that produces a level detected by the measuring receiver, that is equal to the level noted while the transmitter radiated power was measured, corrected for the change of input attenuator setting of the measuring receiver.
o. The measurement shall be repeated with the test antenna and the substitution antenna orientated for horizontal polarization.
p. The measure of the effective radiated power is the larger of the two levels recorded at the input to the substitution antenna, corrected for gain of the substitution antenna if necessary.
q. The resolution bandwidth of the spectrum analyzer was set at 100 kHz for Part 22 and 1MHz for Part 24. The frequency range was checked up to 10th harmonic.
r. Test site anechoic chamber refer to ANSI C63.

TEST RESULTS

Remark:

1. *We were tested all RB Configuration refer 3GPP TS136 521 for each Channel Bandwidth of LTE Band 14; recorded worst case for each Channel Bandwidth of LTE Band 14.*

The results shown in this test report refer only to the sample(s) tested unless otherwise stated and the sample(s) are retained for 30 days only. The document is issued by HUAK, this document cannot be reproduced except in full with our prior written permission. The more details and the authenticity of the report will be confirmed at http://www.cer-mark.com.

Conducted Measurement:

LTE Band 14-5MHz Channel Bandwidth	
Low Channel	
QPSK	16QAM
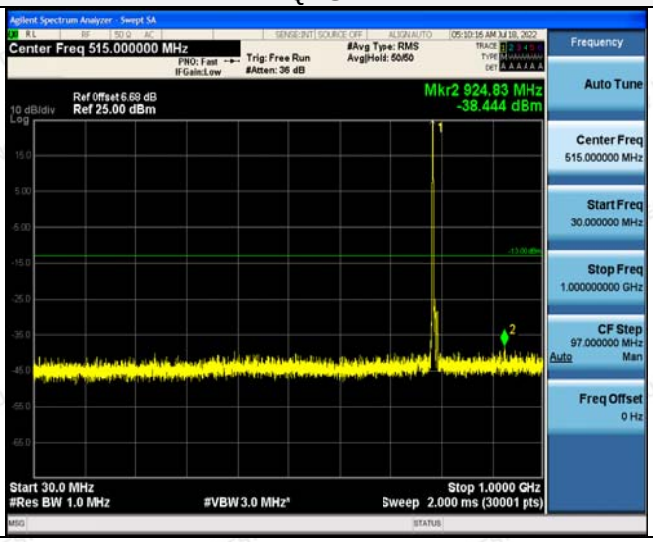	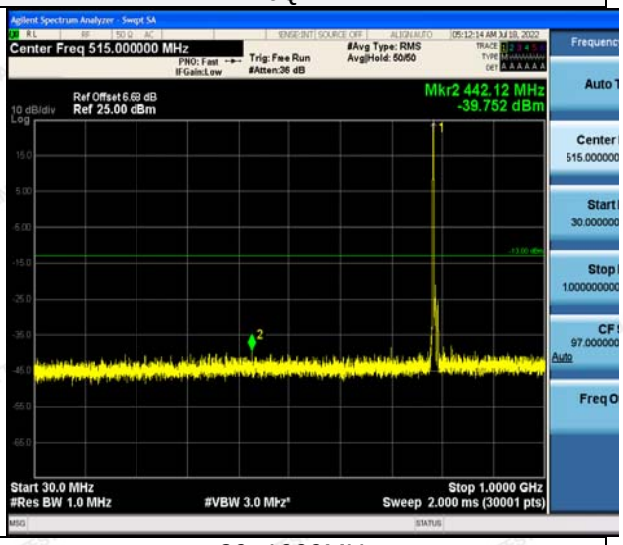
30~1000MHz	30~1000MHz
1000~5000MHz	1000~5000MHz

The results shown in this test report refer only to the sample(s) tested unless otherwise stated and the sample(s) are retained for 30 days only. The document is issued by HUAK, this document cannot be reproduced except in full with our prior written permission. The more details and the authenticity of the report will be confirmed at http://www.cer-mark.com.

5000~12000MHz

5000~12000MHz

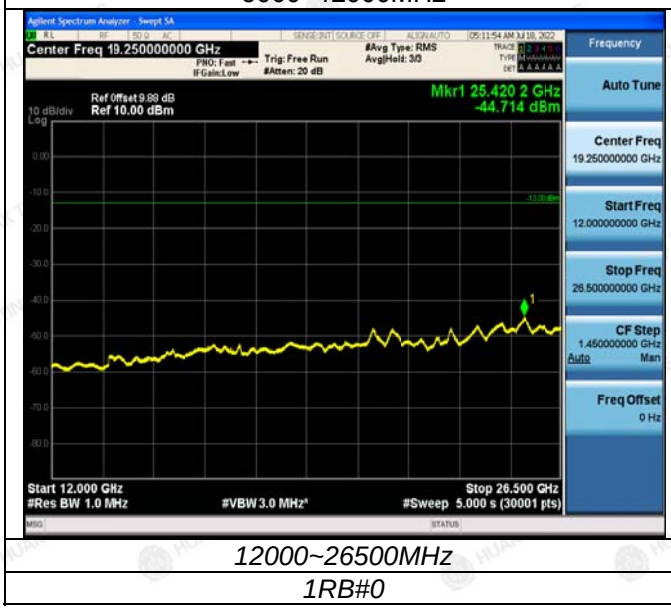

12000~26500MHz

1RB#0

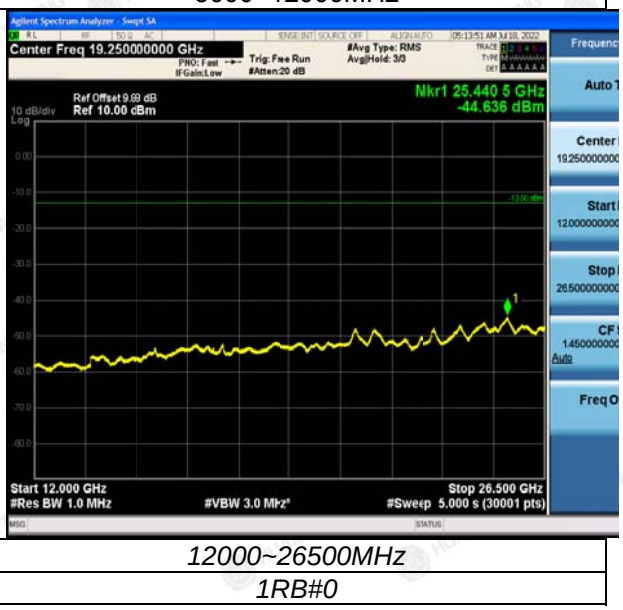

12000~26500MHz

1RB#0

The results shown in this test report refer only to the sample(s) tested unless otherwise stated and the sample(s) are retained for 30 days only. The document is issued by HUAK, this document cannot be reproduced except in full with our prior written permission. The more details and the authenticity of the report will be confirmed at http://www.cer-mark.com.

LTE Band 14-5MHz Channel Bandwidth	
Middle Channel	
QPSK	16QAM
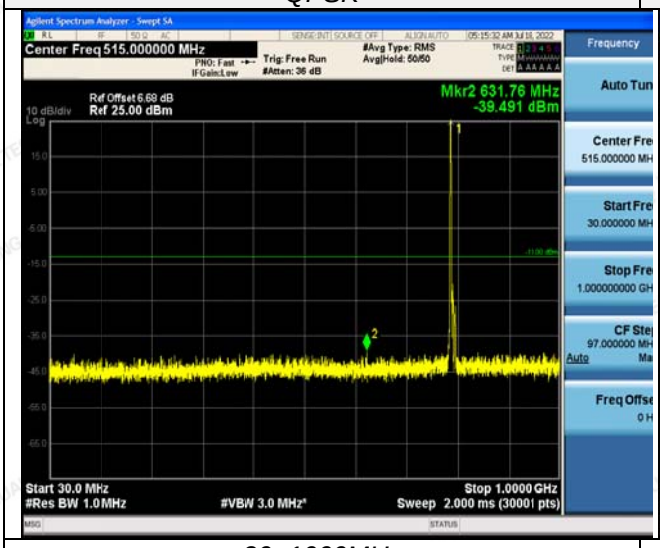	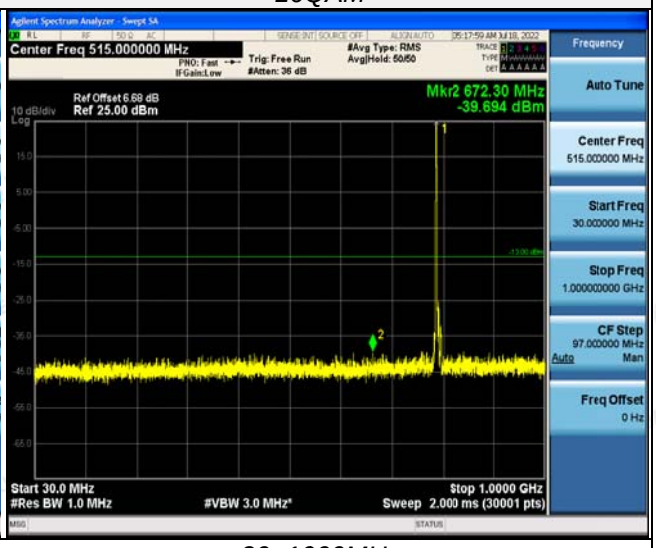
30~1000MHz	30~1000MHz
1000~5000MHz	1000~5000MHz

The results shown in this test report refer only to the sample(s) tested unless otherwise stated and the sample(s) are retained for 30 days only. The document is issued by HUAK, this document cannot be reproduced except in full with our prior written permission. The more details and the authenticity of the report will be confirmed at http://www.cer-mark.com.

5000~12000MHz

5000~12000MHz

12000~26500MHz

12000~26500MHz

The results shown in this test report refer only to the sample(s) tested unless otherwise stated and the sample(s) are retained for 30 days only. The document is issued by HUAK, this document cannot be reproduced except in full with our prior written permission. The more details and the authenticity of the report will be confirmed at http://www.cer-mark.com.

LTE Band 14-5MHz Channel Bandwidth	
High Channel	
QPSK	16QAM
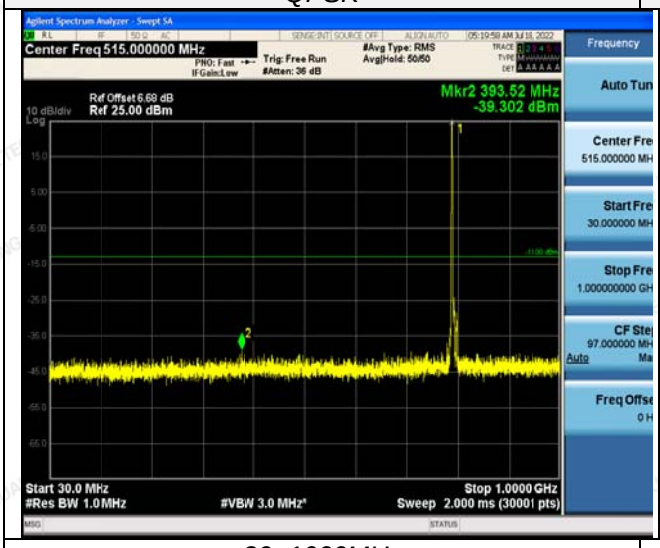	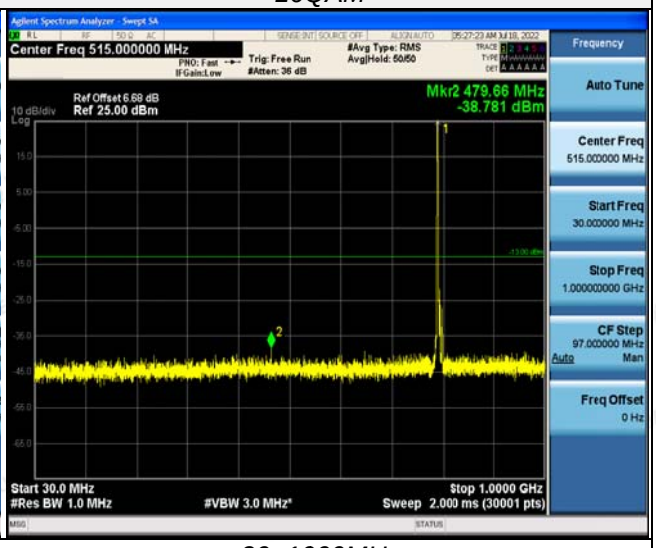
30~1000MHz	30~1000MHz
1000~5000MHz	1000~5000MHz

The results shown in this test report refer only to the sample(s) tested unless otherwise stated and the sample(s) are retained for 30 days only. The document is issued by HUAK, this document cannot be reproduced except in full with our prior written permission. The more details and the authenticity of the report will be confirmed at http://www.cer-mark.com.

5000~12000MHz

5000~12000MHz

12000~26500MHz

12000~26500MHz

The results shown in this test report refer only to the sample(s) tested unless otherwise stated and the sample(s) are retained for 30 days only. The document is issued by HUAK, this document cannot be reproduced except in full with our prior written permission. The more details and the authenticity of the report will be confirmed at http://www.cer-mark.com.

LTE Band 14-10MHz Channel Bandwidth	
QPSK	16QAM
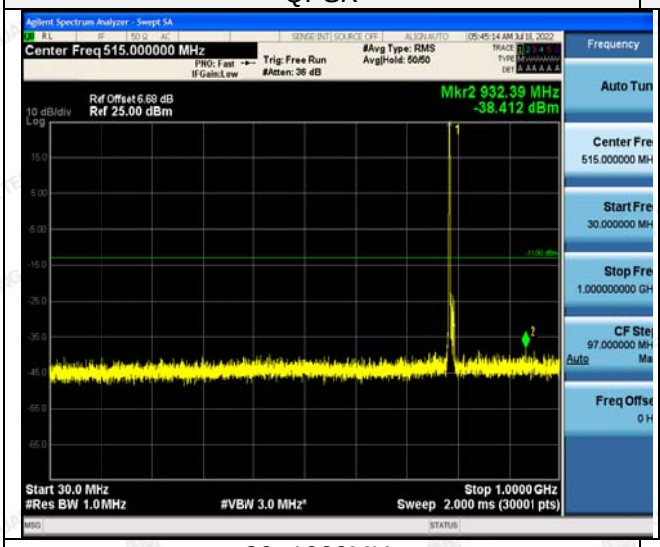	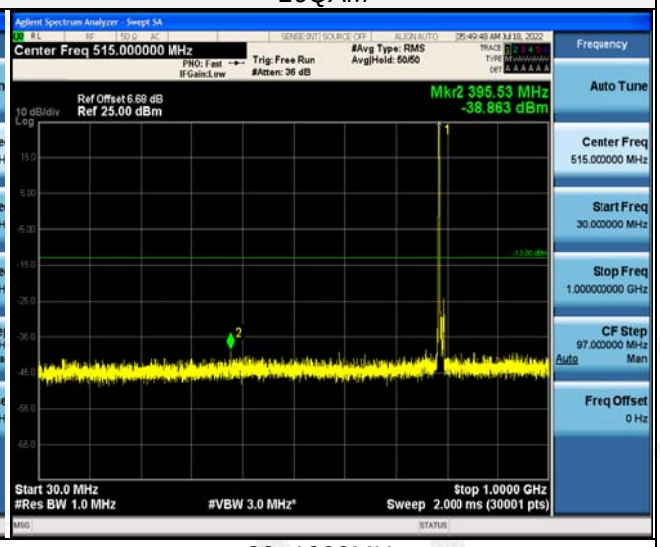
30~1000MHz	30~1000MHz
1000~5000MHz	1000~5000MHz

The results shown in this test report refer only to the sample(s) tested unless otherwise stated and the sample(s) are retained for 30 days only. The document is issued by HUAK, this document cannot be reproduced except in full with our prior written permission. The more details and the authenticity of the report will be confirmed at http://www.cer-mark.com.

5000~12000MHz

5000~12000MHz

12000~26500MHz

12000~26500MHz

The results shown in this test report refer only to the sample(s) tested unless otherwise stated and the sample(s) are retained for 30 days only. The document is issued by HUAK, this document cannot be reproduced except in full with our prior written permission. The more details and the authenticity of the report will be confirmed at http://www.cer-mark.com.

Radiated Measurement:

Remark:
1. *We were tested all RB Configuration refer 3GPP TS136 521 for each Channel Bandwidth of LTE FDD Band 14; recorded worst case for each Channel Bandwidth of LTE FDD Band 14.*
2. *EIRP=P_{Mea}(dBm)-P_{cl}(dB) +G_a(dBi)*
3. *We were not recorded other points as values lower than limits.*
4. *Margin = Limit – EIRP, ERP=EIRP-2.15dBi*

LTE FDD Band 14_Channel Bandwidth 5MHz_QPSK_ Low Channel

Frequency (MHz)	PMea (dBm)	Pcl (dB)	Diatance	Ga Antenna Gain(dB)	ERP (dBm)	Limit (dBm)	Margin (dB)	Polarization
1581	-54.02	4.02	3	12.21	-45.83	-40.00	5.83	H
2371.5	-47.01	5.11	3	13.26	-38.86	-13.00	25.86	H
1581	-58.87	4.02	3	12.21	-50.68	-40.00	10.68	V
2371.5	-53.83	5.11	3	13.26	-45.68	-13.00	32.68	V

LTE FDD Band 14_Channel Bandwidth 5MHz_QPSK_ Middle Channel

Frequency (MHz)	PMea (dBm)	Pcl (dB)	Diatance	Ga Antenna Gain(dB)	ERP (dBm)	Limit (dBm)	Margin (dB)	Polarization
1586	-53.61	4.02	3	12.21	-45.42	-40.00	5.42	H
2379	-47.18	5.11	3	13.26	-39.03	-13.00	26.03	H
1586	-59.11	4.02	3	12.21	-50.92	-40.00	10.92	V
2379	-54.07	5.11	3	13.26	-45.92	-13.00	32.92	V

LTE FDD Band 14_Channel Bandwidth 5MHz_QPSK_ High Channel

Frequency (MHz)	PMea (dBm)	Pcl (dB)	Diatance	Ga Antenna Gain(dB)	ERP (dBm)	Limit (dBm)	Margin (dB)	Polarization
1591	-54.43	4.02	3	12.21	-46.24	-40.00	6.24	H
2386.5	-47.83	5.11	3	13.26	-39.68	-13.00	26.68	H
1591	-59.26	4.02	3	12.21	-51.07	-40.00	11.07	V
2386.5	-54.34	5.11	3	13.26	-46.19	-13.00	33.19	V

LTE FDD Band 14_Channel Bandwidth 10MHz_QPSK_ Middle Channel

Frequency (MHz)	PMea (dBm)	Pcl (dB)	Diatance	Ga Antenna Gain(dB)	ERP (dBm)	Limit (dBm)	Margin (dB)	Polarization
1586	-54.83	4.02	3	12.21	-46.64	-40.00	6.64	H
2379	-46.34	5.11	3	13.26	-38.19	-13.00	25.19	H
1586	-59.2	4.02	3	12.21	-51.01	-40.00	11.01	V
2379	-53.87	5.11	3	13.26	-45.72	-13.00	32.72	V

LTE FDD Band 14_Channel Bandwidth 5MHz_16QAM _ Low Channel

Frequency (MHz)	PMea (dBm)	Pcl (dB)	Diatance	Ga Antenna Gain(dB)	ERP (dBm)	Limit (dBm)	Margin (dB)	Polarization
1581	-54.38	4.02	3	12.21	-46.19	-40.00	6.19	H
2371.5	-47.26	5.11	3	13.26	-39.11	-13.00	26.11	H
1581	-59.13	4.02	3	12.21	-50.94	-40.00	10.94	V
2371.5	-54.09	5.11	3	13.26	-45.94	-13.00	32.94	V

The results shown in this test report refer only to the sample(s) tested unless otherwise stated and the sample(s) are retained for 30 days only. The document is issued by HUAK, this document cannot be reproduced except in full with our prior written permission. The more details and the authenticity of the report will be confirmed at http://www.cer-mark.com.

LTE FDD Band 14_Channel Bandwidth 5MHz_16QAM _ Middle Channel

Frequency (MHz)	PMea (dBm)	Pcl (dB)	Diatance	Ga Antenna Gain(dB)	ERP (dBm)	Limit (dBm)	Margin (dB)	Polarization
1586	-53.6	4.02	3	12.21	-45.41	-40.00	5.41	H
2379	-47.24	5.11	3	13.26	-39.09	-13.00	26.09	H
1586	-58.59	4.02	3	12.21	-50.4	-40.00	10.4	V
2379	-53.52	5.11	3	13.26	-45.37	-13.00	32.37	V

LTE FDD Band 14_Channel Bandwidth 5MHz_16QAM _ High Channel

Frequency (MHz)	PMea (dBm)	Pcl (dB)	Diatance	Ga Antenna Gain(dB)	ERP (dBm)	Limit (dBm)	Margin (dB)	Polarization
1591	-54.48	4.02	3	12.21	-46.29	-40.00	6.29	H
2386.5	-47.11	5.11	3	13.26	-38.96	-13.00	25.96	H
1591	-58.95	4.02	3	12.21	-50.76	-40.00	10.76	V
2386.5	-53.59	5.11	3	13.26	-45.44	-13.00	32.44	V

LTE FDD Band 14_Channel Bandwidth 10MHz_16QAM _ Middle Channel

Frequency (MHz)	PMea (dBm)	Pcl (dB)	Diatance	Ga Antenna Gain(dB)	ERP (dBm)	Limit (dBm)	Margin (dB)	Polarization
1586	-53.9	4.02	3	12.21	-45.71	-40.00	5.71	H
2379	-46.48	5.11	3	13.26	-38.33	-13.00	25.33	H
1586	-58.91	4.02	3	12.21	-50.72	-40.00	10.72	V
2379	-53.69	5.11	3	13.26	-45.54	-13.00	32.54	V

The results shown in this test report refer only to the sample(s) tested unless otherwise stated and the sample(s) are retained for 30 days only. The document is issued by HUAK, this document cannot be reproduced except in full with our prior written permission. The more details and the authenticity of the report will be confirmed at http://www.cer-mark.com.

3.6 Frequency Stability under Temperature & Voltage Variations

LIMIT

90.539 (c) The frequency stability of mobile, portable, and control transmitters operating in the narrowband segment must be 400 parts per billion or better when AFC is locked to the base station.When AFC is not locked to the base station, the frequency stability must be at least 1.0 ppm for 6.25 kHz, 1.5 ppm for 12.5 kHz (2 channel aggregate), and 2.5 ppm for 25 kHz (4 channel aggregate).

TEST CONFIGURATION

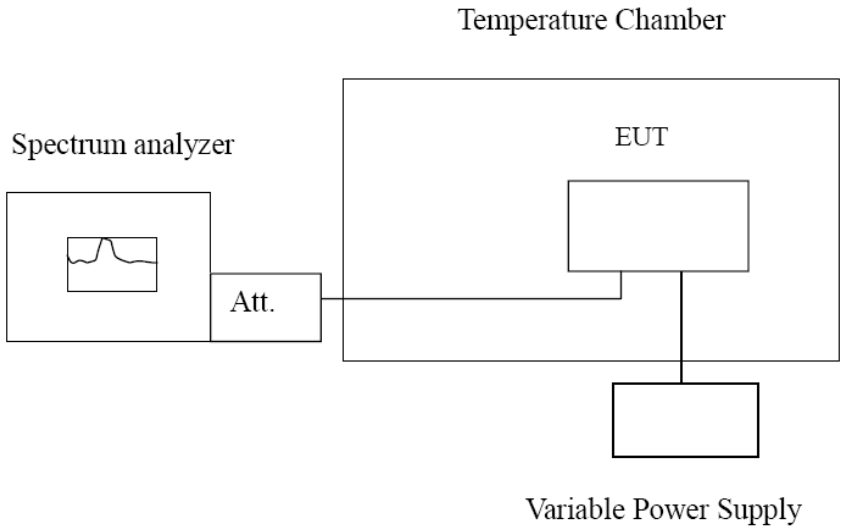

TEST PROCEDURE

The EUT was setup according to EIA/TIA 603D

Frequency Stability Under Temperature Variations:
In order to measure the carrier frequency under the condition of AFC lock, it is necessary to make measurements with the EUT in a “call mode”. This is accomplished with the use of R&S CMW500 DIGITAL RADIO COMMUNICATION TESTER.
1. Measure the carrier frequency at room temperature.
2. Subject the EUT to overnight soak at -30℃.
3. With the EUT, powered via nominal voltage, connected to the CMW500 and in a simulated call on middle channel for LTE Band 14, measure the carrier frequency. These measurements should be made within 2 minutes of Powering up the EUT, to prevent significant self-warming.
4. Repeat the above measurements at 10℃ increments from -30℃ to +50℃. Allow at least 1.5 hours at each temperature, unpowered, before making measurements.
5. Re-measure carrier frequency at room temperature with nominal voltage. Vary supply voltage from minimum voltage to maximum voltage, in 0.1Volt increments re-measuring carrier frequency at each voltage. Pause at nominal voltage for 1.5 hours unpowered, to allow any self-heating to stabilize, before continuing.
6. Subject the EUT to overnight soak at +50℃.
7. With the EUT, powered via nominal voltage, connected to the CMW500 and in a simulated call on the centre channel, measure the carrier frequency. These measurements should be made within 2 minutes of Powering up the EUT, to prevent significant self-warming.
8. Repeat the above measurements at 10 ℃ increments from +50℃ to -30℃. Allow at least 1.5 hours at each temperature, unpowered, before making measurements
9. At all temperature levels hold the temperature to +/- 0.5℃ during the measurement procedure.

Frequency Stability Under Voltage Variations:
Set chamber temperature to 20℃. Use a variable AC power supply / DC power source to power the EUT and set the voltage to rated voltage. Set the spectrum analyzer RBW low enough to obtain the desired frequency resolution and recorded the frequency.

The results shown in this test report refer only to the sample(s) tested unless otherwise stated and the sample(s) are retained for 30 days only. The document is issued by HUAK, this document cannot be reproduced except in full with our prior written permission. The more details and the authenticity of the report will be confirmed at http://www.cer-mark.com.

Reduce the input voltage to specify extreme voltage variation (±15%) and endpoint, record the maximum frequency change.

TEST RESULTS

Remark:
1. We tested all RB Configuration refer 3GPP TS136 521 for each Channel Bandwidth of LTE Band 14; recorded worst case.

LTE Band 14, 10MHz bandwidth (worst case of all bandwidths)

Frequency Error vs Voltage

Voltage (V)	Frequency error (Hz)		Frequency error (ppm)	
	QPSK	16QAM	QPSK	16QAM
10.2	-5.05	-5.14	-0.006388	-0.006502
12.0	-2.68	-3.66	-0.003390	-0.004630
13.8	-3.35	-3.92	-0.004238	-0.004959

Frequency Error vs Temperature

Temperature (℃)	Frequency error (Hz)		Frequency error (ppm)	
	QPSK	16QAM	QPSK	16QAM
-30°	-3.06	-4.82	-0.003871	-0.006097
-20°	-3.36	-4.99	-0.004250	-0.006312
-10°	-4.32	-4.69	-0.005465	-0.005933
0°	-5.54	-4.39	-0.007008	-0.005553
10°	-4.03	-4.69	-0.005098	-0.005933
20°	-2.68	-3.39	-0.003380	-0.004288
30°	-4.13	-4.58	-0.005208	-0.005776
40°	-1.60	1.50	-0.002018	0.001892
50°	-3.95	-4.51	-0.004981	-0.005687

The results shown in this test report refer only to the sample(s) tested unless otherwise stated and the sample(s) are retained for 30 days only. The document is issued by HUAK, this document cannot be reproduced except in full with our prior written permission. The more details and the authenticity of the report will be confirmed at http://www.cer-mark.com.

4 Test Setup Photos of the EUT

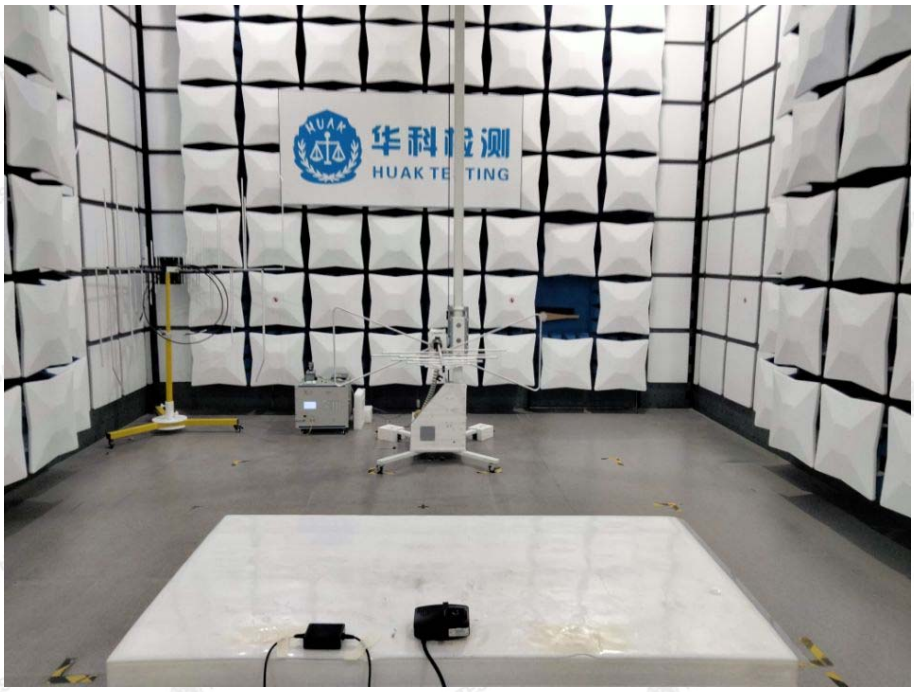

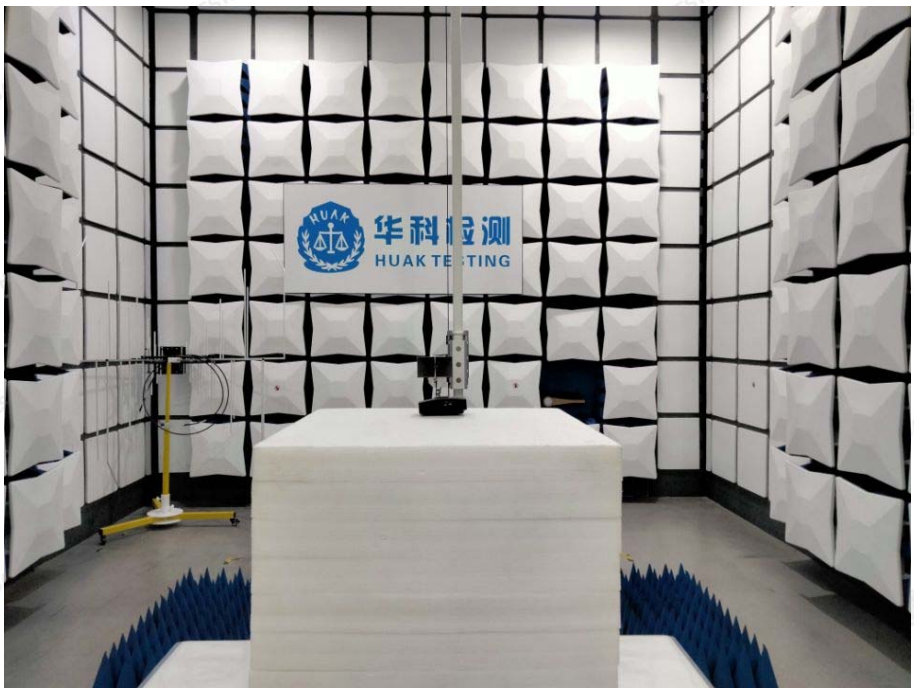

The results shown in this test report refer only to the sample(s) tested unless otherwise stated and the sample(s) are retained for 30 days only. The document is issued by HUAK, this document cannot be reproduced except in full with our prior written permission. The more details and the authenticity of the report will be confirmed at http://www.cer-mark.com.

5 PHOTOS OF THE EUT

Reference to the report: ANNEX A of external photos and ANNEX B of internal photos

********** End of Report **********

The results shown in this test report refer only to the sample(s) tested unless otherwise stated and the sample(s) are retained for 30 days only. The document is issued by HUAK, this document cannot be reproduced except in full with our prior written permission. The more details and the authenticity of the report will be confirmed at http://www.cer-mark.com.

TEL : +86-755 2302 9901 FAX : +86-755 2302 9901 E-mail : service@cer-mark.com
Add: 1-2F., Building B2, Junfeng Zhongcheng Zhizao Innovation Park, Heping Community, Fuhai Street, Bao'an District, Shenzhen, Guangdong, China