Casada™
healthcare

relaxmyway

POWERBOARD 2.1

CASADA™ healthcare since 2000

< relax**my**way

Since being established in 2000, the name CASADA stands for high quality products on the health-spa and fitness market. Today, CASADA equipment is available in 37 countries world-wide.

Constant further development, an unmistakeable design and a focused orientation towards a better quality of life are what characterize CASADA products, as much as their unbeatable and reliable quality.

CONGRATULATIONS!

With the purchase of this fitness device you have shown awareness of your health.

In order for you to enjoy the advantages of your massage device in the long term, we ask you to read and adhere to the instruction manual carefully.

We wish you a lot of fun with your personal PowerBoard 2.1.

TABLE OF CONTENTS

1	Safety Instructions
4	Specifications
5	Indications
7	Contraindications
8	Equipment / Functions
8	Display
9	Remote control
10	Automatic Programs
10	Training overview
11	Troubleshooting
11	Storage / Care
11	Conformity declaration
12	Calorie counter
12	Body - Mass - Index
13	Resting Heart Rate
14	Warranty conditions

IMPORTANT SAFETY INSTRUCTIONS

When using an electrical appliance ,basic precautions should always be followed, including the following:
Read all instructions before using(this appliance).
For Household Use Only.

DANGER - To reduce the risk of electric shock:
1) Always unplug this appliance from the electrical outlet immediately after using and before cleaning.

WARNING – To reduce the risk of burns, fire, electric shock, or injury to persons:
1) An appliance should never be left unattended when plugged in. Unplug from outlet when not in use, and before putting on or taking off parts.
2) Do not operate under blanket or pillow, Excessive heating can occur and cause fire, electric shock, or injury to persons.
3) This appliance is not intended for use by persons with reduced physical, sensory or mental capabilities, or lack of experience and knowledge, unless they have been given supervision or instruction concerning use of the appliance by a person responsible for their safety. Keep children under the age of 13 away from this machine.

WARNING - Keep children away from extended foot support.
4) Use this appliance only for its intended use as described in this manual. Do not use attachments not recommended by the manufacturer.
5) Never operate this appliance if it has a damaged cord or plug, if it is not working properly, if it has been dropped or damaged, or dropped into water. Return the appliance to a service center for examination and repair.
6) Do not carry this appliance by supply cord or use cord as a handle
7) Keep the cord away from heated surfaces.
8) Never operate the appliance with the air opening blocked. Keep the air openings free of lint, hair, and the like
9) Never drop or insert any object into any opening.
10) Do not use outdoors.
11) Do not operate where aerosol(spray)products are being used or where oxygen is being administered.
12) To disconnect, turn all controls to the off position, then remove plug from outlet.

WARNING - Connect this appliance to a properly grounded outlet only. See Grounding Instructions.
13) To reduce the risk of injury, place the footboard on a flat, horizontal, and stable surface. Do not place or use the footboard on a slippery surface.
14) To reduce the risk of injury, do not use the footboard with wet shoes wet feet, or socks
15) To reduce the risk of injury, do not use the footboard if the surface is wet. If the footboard surface becomes wet, dry and surface before using.

SAFETY INSTRUCTIONS

Please carefully read the following instructions before using this fitness equipment to ensure proper functioning and optimal effect. Please retain these instructions for use!

- This fitness device complies with the recognised principles of technology and current safety regulations.
- This equipment is maintenance free. Any necessary repairs must be performed by an authorised professional. Improper use and unauthorised repairs are prohibited for safety reasons and will void the warranty.
- Never touch the power plug with wet hands.
- Please avoid the equipment coming into contact with water, high temperatures and direct sunlight.
- If you have stored the equipment at a cold place for a longer time, you should keep it one hour at room temperature before using it.
- Be sure to unplug the equipment from the power point during extended periods of non-use to eliminate the risk of a short circuit.
- Do not use damaged plugs, cords or loose sockets. Damaged plug or cords must be replaced by the manufacturer, service representative or qualified personnel. In the event of malfunction unplug the equipment immediately. We assume no liability for damages resulting from wrongful or improper use.
- According to prevailing opinion, children under 13 years of age should not practise any vibration training. There is however, no upper age restriction.
- In order to avoid over-training, you should not exceed the following maximum training times:

Fitness level untrained:	Fitness level exercise irregularly	Fitness level athletic/ trained:
15min at 1-3x training sessions/week	30min at 1-4x training sessions/week	45min bei 1-6x training sessions/week

ATTENTION!

Even people, who already have a good training level, should start slowly, since the vibrations represent a completely new form of exercise for the muscles. With time, the training intensity can be gradually increased, with higher frequencies, more dynamic exercises or shorter breaks.

- Never use sharp or pointy objects.
- Please always make sure that your body has a correct posture in order to avoid damaging joints or organs.
- Never place your head or chest directly on the PowerBoard 2.1.
- Never use vibration exercise for medical reasons (treatment and alleviation of ailments) without consulting your physician.
- Never train above an intensity of level 10 for exercises where the head is near the PowerBoard 2.1 (e.g. press-ups, forearm stand, side stand, etc.)!

Warning: Changes or modifications to this unit not expressly approved by the party responsible for compliance could void the user's authority to operate the equipment.

NOTE: This equipment has been tested and found to comply with the limits for a Class B digital device, pursuant to Part 15 of the FCC Rules. These limits are designed to provide reasonable protection against harmful interference in a residential installation. This equipment generates uses and can radiate radio frequency energy and, if not installed and used in accordance with the instructions, may cause harmful interference to radio communications.

However, there is no guarantee that interference will not occur in a particular installation. If this equipment does cause harmful interference to radio or television reception, which can be determined by turning the equipment off and on, the user is encouraged to try to correct the interference by one or more of the following measures:

- Reorient or relocate the receiving antenna.
- Increase the separation between the equipment and receiver.
- Connect the equipment into an outlet on a circuit different from that to which the receiver is connected.
- Consult the dealer or an experienced radio/TV technician for help.

SAVE THESE INSTRUCTIONS

GROUNDING INSTRUCTIONS

This product must be grounded. If it should malfunction or breakdown, grounding provides a path of least resistance for electric current to reduce the risk of electric shock. This product is equipped with a cord having an equipment-grounding conductor and a grounding plug. The plug must be plugged into an appropriated outlet that is properly installed and grounded in accordance with all local codes and ordinances.

DANGER-improper connection of the equipment –grounding conductor can result in a risk of electric shock. Check with a qualified electrician or servicemen if you are in doubt as to whether the product is properly grounded. Do not modify the plug provided with the product- if it will not fit the outlet, have a proper outlet installed by a qualified electrician.

This product is for use on a nominal 120-V circuit and has a grounding plug that looks like the plug illustrated in sketch A in Figure 86.1. Make sure that the products is connected to an outlet having the same configuration as the plug. No adapter should be used with this product.

Figure 86.1
Grounding methods

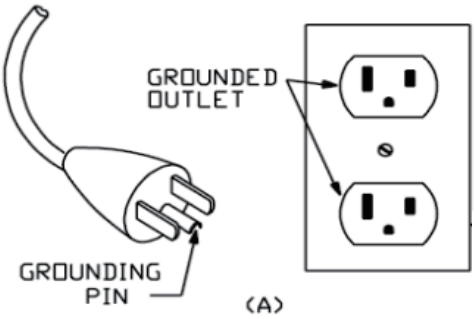

SPECIFICATIONS

Amplitude:	0-18 mm area 1: 7 mm area 2: 12 mm area 3: 18 mm
Frequency:	5.6 – 13.6 Hz
Speed:	Level 1-20
Voltage:	AC 220-240 V ~ 50/60 Hz
Energy consumption:	max. 250 watts under normal use
Box dimensions:	85 x 50 x 20 cm
Product dimensions:	79 x 47 x 14.5 cm
Weight:	22 kg

C ETL LISTED US
Intertek
5002821

USA / CANADA

voltage:	AC 110-120 V ~ 60 Hz
rated power:	220 Watt
box dimensions	85 x 50 x 20 cm
product dimensions:	79 x 47 x 14.5 cm
weight:	22 kg

Instructions:
For unilateral stress on the PowerBoard 2.1, please always stand centrally and with both feet on the device first, and then from there shift the weight outwards.

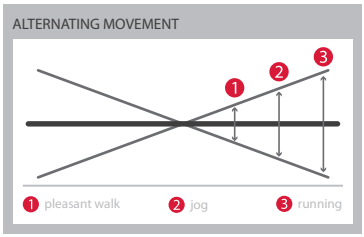

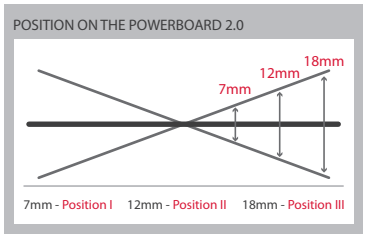

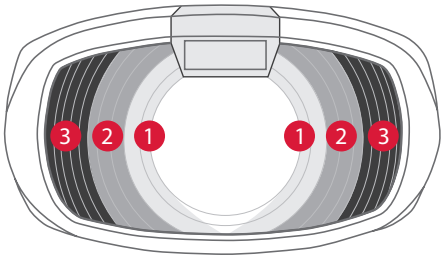

INDICATIONS

ORTHOPAEDIC INDICATIONS

- Back pain with various causes (pain relief through improved muscle relaxation, stretching and coordination, inhibited pain receptors)
- Posture damage (build up strength and improve posture)
- Scoliosis (improved stability)
- Foot deformities (strengthening of the foot instep muscles)
- Muscular power deficiency after being immobile, accident, injury (improved muscle performance)
- Muscular hypertension, to high muscle tension (reduced muscle tension)
- Slipped disc, if not acute (training the local muscle system)
- Degenerative diseases of the spine (pain relief, stability)
- Osteoporosis (improved bone strength and mass)

SPORT-MEDICAL INDICATIONS

- Increased performance (muscle building, improved coordination, speed and flexibility, parallel to sport type-specific training)
- Sports injuries (Improving the metabolism, quick mobilization of the damaged tissue, earlier start of training)

NEUROLOGIC INDICATIONS

Spastic paralysis:

- Parkinson's (reduced muscle tension and tremor, improved coordination and posture)
  You can find more information under the topic: Parkinson's disease
- Multiple Sclerosis
  Regulation of muscle tension, improved posture, bladder-rectal control, increased muscle functions, improved posture. You can find more information under the topic: Multiple Sclerosis
- Stroke (Reduced spasticity, improved strength handling, faster mobilisation and rehabilitation)
  You can find more information under the topic: stroke
- Paraplegia (tension regulation, training of arm and support muscles, coordination, relaxation, control of movement and speed, support of treadmill training for incomplete paraplegia, distinct improvement of performance and reduced side difference in gait)

INDICATIONS

- Foot drop syndrome, e.g. slipped disc (improved motoric control and increased muscle performance)
- Plexus paresis, paralysis of arm nerves e.g. after motorbike accident improved motoric control and increased muscle performance and muscle build-up
- Disturbances of equilibrium(improved balance and prophylaxis against falling)

INTERNAL MEDICINE

- Arterial and venous circulatory disorders (PAVK)
  (improvement through increased circulation, tension regulation of vascular wall muscles)
  You can find more information under the topic: PAVK

GERONTOLOGIC INDICATIONS

- Loss of muscle mass and performance (increased power, power build up, improved coordination, increased muscle performance)
- Osteoporosis (increased bone substance)
- Lack of exercise (improved mobility through strength increase and build-up, improved coordination and balance)
- Decreased posture control (Build-up of muscles in global and local trunk muscles, improved posture)
- Urinary incontinence (improved urinary and faecal incontinence)
- Disturbances of equilibrium (reduced risk of falling through improved balance, strength and sensory-motoric performance regarding posture and movement)

UROLOGIC AND GYNAEOCOLOGIC INDICATIONS

- Incontinence (improved bladder-rectal control)
- Pelvic floor weakness (improved bladder-rectal control, reduced back pain)
- Spinal and pelvic instability following delivery (strength build-up and posture stability)

CONTRAINDICATIONS

Especially in the frequency range from 15Hz!

- acute thrombosis or high individual thrombosis risk
- pregnancy
- severe osteoporosis with fractures sue to osteoporosis
- severe diabetes with strong circulation disorder (gangrene, retina)
- metal and ceramic implants that are less than 6 months old in the body regions to be trained
- fresh wounds and operations
- stents and bypasses that are less than 6 months old
- untreated high blood pressure
- severe heart insufficiency according to NYHA > degree I
- fresh bone fractures
- hernias (inguinal hernia)

Possible side effects of the vibration training

- tingling in muscles
- itching of skin
- increased pain due to too high training intensity
- temporary drop in blood pressure
- short-term hypoglycaemia

Should the contraindications be viewed as absolute?

If you are affected by one of the contraindications listed above, it does not mean that you are absolutely forbidden to do vibration training. In this case, we recommend you consult your physician. The vibration platform can be used in addition to your usual therapy if this is recommended by your physician or a physiotherapist.

EQUIPMENT / FUNCTIONS

The PowerBoard 2.1 is equipped with a high-performance, stabile motor. Aside from its diverse automatic programs (For details see [2] automatic programs), the PowerBoard 2.1 is equipped with a manual range that is very easy to adjust. Regardless of what level of fitness you have: Unfit, doing sport irregularly, doing sport regularly, or even a professional athlete; training is simple for EVERYONE and can be individually tailored to suit one's own needs. On the device's digital display you can always see exactly which programme is activated, the duration of the training time and what the intensity of the training is.

The transport rollers installed in the PowerBoard 2.1 ensure high mobility. The rollers also function as handles. The rubber supporting feet guarantee that the device has exceptional stability and optimum noise limitation due to the absorption of sound.

DISPLAY

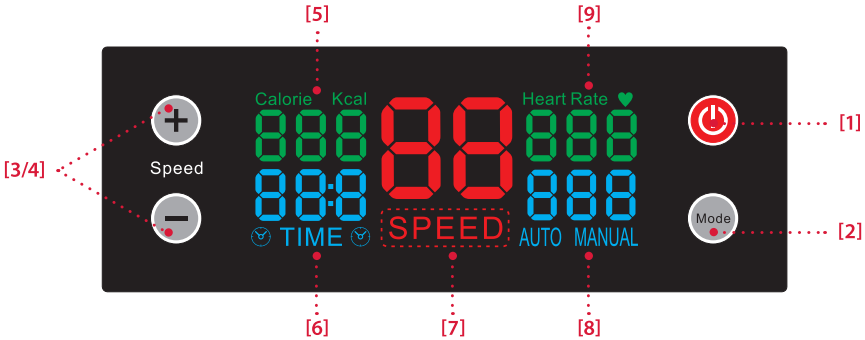

[1] **START/STOP** Here you can start or stop the program.

[2] **MODE** You can select various settings using this button.
Manual program (individual)
Automatic program (preset: 1 – Warm Up, 2 – Refresh, 3 – Interval)
Time mode (1-15 minutes)
Speed and time cannot be altered in an automatic program. These are preset.

[3] **+ / –** You can set the running time in time mode with these buttons (1-15 minutes).

[4] **SPEED + / –** You can regulate the speed in manual mode using these buttons. (Level 1-20)

[5] Current calorie consumption

[6] Remaining time. If the TIME display flashes, you are using the time mode.

[7] Current speed level

[8] Shows the selected mode. If the AUTO display flashes, you are using an automatic program. If the MANUAL display flashes, you are using a manual program.

[9] It shows the current heart rate in combination with the pulse sensor.

REMOTE CONTROL

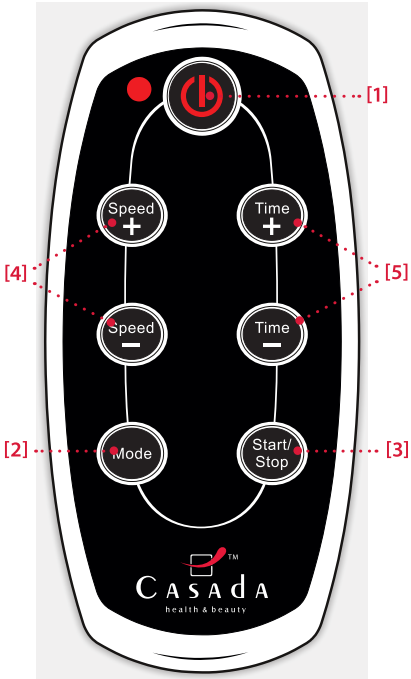

[1] ON/OFF
For switching the PowerBoard 2.1 on and off.

[2] MODE
You can select various settings using this button.

- Manual program (individual)
- Automatic program (preset: 1 – Warm Up, 2 – Refresh, 3 – Interval)
- Time mode (1-15 minutes)

Speed and time cannot be altered in an automatic program. These are preset.

[3] START/STOP
Here you can start or stop the program.

[4] SPEED + / –
You can regulate the speed in manual mode using these buttons. (Level 1-20)

[5] TIME (ONLY IN MANUAL MODE)
You can set the running time in time mode with these buttons (1-15 minutes).

AUTOMATIC PROGRAMS

AUTOMATIC PROGRAMS															
Warm up															
	Minutes	1	2	3	4	5	6	7	8	9	10	11	12	13	14	15
	Speed	8	8	10	10	12	12	14	14	16	16	12	12	10	10	8
Refresh															
	Minutes	1	2	3	4	5	6	7	8	9	10	11	12	13	14	15
	Speed	6	8	10	12	14	14	12	10	12	14	16	16	10	10	8
Interval															
	Minutes	1	2	3	4	5	6	7	8	9	10	11	12	13	14	15
	Speed	6	8	14	8	14	8	14	8	14	8	14	8	14	8	6

TRAINING OVERVIEW

TRAINING-DVD ENCLOSED

The recommended training time with the PowerBoard 2.1 is 10 minutes 3 times a week. This full body plan was established by a personal fitness coach and supports you in reaching your goals. You can of course always tailor the duration and intensity to suit your personal shape or form and preferences. Remember that a sensible warm-up is necessary before each training session and should be by no means neglected. Even if you just warm up for 5 minutes, you are then ready to get started. There is a whole range of exercises that you can perform using the PowerBoard 2.1. If you desire new input or variety, just take a look online or get in touch with your PowerBoard 2.1 supplier.

SECTION OF MUSCLES:	EXERCISES:				
Breast	Simple press-up	Classic press-up	Fly (with vibration dumbbell)	Dumbbell press (with vibration dumbbell)	Static press-up
Repetition/Time	20	20	20	20	20
Back	Forearm support	Cable rows (with vibration dumbbell)	Cable rows with both arms (with vibration dumbbell)	Deadlift (with vibration dumbbell)	Bent arm lat pulldown
Wiederholungen/ Zeit	60 sec	2x 20	20	20	20
Stomach	Leg extensions	Elbow to knee	Side plank	Side crunch	
Repetition/Time	20	2 x 20	2 x 15	2 x 15	
Bum	Leg raises (straight leg)	Leg raises (bent leg)	Static bridge	Dynamic bridge	Static bridge (with leg raised)
Wiederholungen/ Zeit	2 x 20	2 x 20	30 sec	10	2 x 15
Legs and calves	Squat	Static lunge	Forward lunge	Standing calf raises	
Repetition/Time	30 sec	2 x 30 sec	2 x 15	60 sec	
Shoulders and arms	Lateral raises	Front lifts	Biceps curl (with vibration dumbbell)	Dumbbell raise (with vibration dumbbell)	Static press-up
Wiederholungen/ Zeit	15	15	20	20	20

TROUBLESHOOTING

MALFUNCTION	SOLUTION
The remote control does not work.	• Check that the batteries are inserted correctly. • Change the batteries
The device shows no functions.	• Check the connection of the electricity cable to the power outlet and the connection at the device • Attempt to activate the device using the remote control and the power switch on the device
The device independently performs functions that were not selected (exception: automatic programs)	• Switch the device off, disconnect from the mains, and wait for 20 seconds. Reconnect the device and switch the device back on. (Restart for malfunction)
Signal interference	• There are too many sources of interference nearby, for your PowerBoard and pulse sensor, to work properly. Change your position and rescan for a signal.

ATTENTION!

Electromagnetic blocks may cause signal interference. These can occur around high-voltage power lines, traffic light signals, overhead wiring for electric railways, buses or trams, televisions, car engines, bicycle computers, some motorised exercise equipment, mobiles, or when passing electric safety gates. This will repeatedly result in inaccurate heart rate measurements.

Should any malfunctions not be remedied by the above-mentioned solutions or should other problems arise, please contact your Casada partner to receive professional and individual advice and solutions for the problem at hand. Your Casada partner will be glad to help you solve any malfunctions fast and professionally.

STORAGE / CARE

Regular care will extend the life of your PowerBoard 2.1 whilst also ensuring safe operation at all times.

1. Recommended storage: dry, free of dust. Please wind cord.
2. Keep liquids and open fire away from the PowerBoard 2.1.
3. Clean the equipment using a dry, soft cloth.
4. Always unplug the PowerBoard 2.1 when not in use.

CONFORMITY DECLARATION

Corresponds to the European guidelines 2006/95/EC.

CALORIE COUNTER

The calorie counter of PowerBoard 2.1 is a new function to ensure even more effectiveness.

The calories displayed/consumed represent an average standard value that can be reached by consistent training. When finding one's position on the PowerBoard 2.1 without movement you consume much fewer calories than during an average training session with mediocre effort.

The calorie counter calculates the data on the basis of benchmarks which consist of several sporting activities. Average values, from a light walk to quick jogging, or a normal work-out exercise with or without weights, are calculated. The method for calculating calories is based on the overall result of the calorie consumption of these types of sports with an average recorded weight of 85kg.

Using this particular method, calorie consumption can be considered to be rather realistic. It is calculated by the second, so that if there are changes in speed the calorie count is recalculated in order to show an exact consumption.

BODY-MASS-INDEX

The Body Mass Index (BMI) is a measurement for assessing a person's weight (body mass). Since excess weight is a globally growing problem the body mass index is primarily used to indicate associated risks.

The BMI correlates body mass to the body surface, which is calculated approximately using the square of the body height. The BMI therefore only represents a rough reference point, as it does not consider physique and sex or the individual composition of a person's body mass of fat- and muscle tissue.

THE OPTIMUM BODY MASS INDEX (BMI) APPROPRIATE TO AGE

Age	optimum BMI
19-24	19-24
25-34	20-25
35-44	21-26
45-54	22-27
55-64	23-28
older than 65	24-29

$$\text{BMI} = \frac{\text{body mass (kg)}}{\text{body height}^2\text{ (m)}}$$

	BMI MALE	BMI FEMALE
Underweight	under 20	under 19
Normal weight	20-25	19-24
Overweight	26-30	25-30
Obese	31-40	31-40
Severely obese	greater than 40	greater than 40

RESTING HEART RATE

The resting heart rate is an indicator of your fitness. It is best measured in the morning shortly after waking whilst lying down, when the body is still completely relaxed. Measure using thumb and index finger either from the left wrist or the carotid artery, counting the heart beat for 15 seconds and multiplying the number by 4, or using a pulse monitor.

MAN

FITNESS	AGE					
	18-25	**26-35**	**36-45**	**46-55**	**56-65**	**65+**
Athleate	49-55	49-54	50-56	50-57	51-56	50-55
Excellent	56-61	55-61	57-62	58-63	57-61	56-61
Good	62-65	62-65	63-66	64-67	62-67	62-65
+ Above average	66-69	66-70	67-70	68-71	68-71	66-69
Average	70-73	71-74	71-75	72-76	72-75	70-73
- Below average	74-81	75-81	76-82	77-83	76-81	74-79
Poor	82+	82+	83+	84+	82+	80+

WOMAN

FITNESS	AGE					
	18-25	**26-35**	**36-45**	**46-55**	**56-65**	**65+**
Athleate	54-60	54-59	54-59	54-60	54-59	54-59
Excellent	61-65	60-64	60-64	61-65	60-64	60-64
Good	66-69	65-68	65-69	66-69	65-68	65-68
+ Above average	70-73	69-72	70-73	70-73	69-73	69-72
Average	74-78	73-76	74-78	74-77	74-77	73-76
- Below average	79-84	77-82	79-84	78-83	78-83	77-84
Poor	85+	83+	85+	84+	84+	84+

WARRANTY CONDITIONS

The dealer grants the statutory warranty period on the product described overleaf. The warranty applies from the date of purchase. The date of purchase is demonstrated by the sales receipt.

The dealer is to repair or replace products registered within Germany which are found to be defective free of charge. Parts subject to wear and tear not covered. To assert your claim, simply return the defective product with the sales receipt before the end of the warranty period.

The warranty claim does not apply if it is established that a defect has occurred e.g. through external influence or as a result of repair or alteration not carried out by the manufacturer or an authorized dealer.

The warranty granted by the seller is limited to repair or replacement of the product. Under this warranty, the manufacturer or seller has no further liability and is not responsible for damage caused by disregard of the operating instructions and/or improper use of the product.

If inspection of the product by the seller reveals that the warranty claim relates to a defect not covered by the warranty or that the warranty period has expired, the cost of the inspection and repair are to be borne by the customer.

Casada International GmbH
Obermeiers Feld 3
33104 Paderborn, Germany
info@casada.com
www.casada.com

Copyright Images and texts are subject to the copyright of Casada International GmbH and may not be used for other purposes without express confirmation.

Copyright (c) 2015 Casada International GmbH. All rights reserved.

Casada™
healthcare