Cassia Networks

CASSIA BLUETOOTH SPEAKER
USER GUIDE

GETTING STARTED -- ENGLISH

I. INCLUDED IN PACKAGE

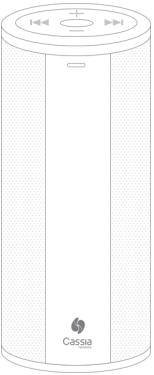

Cassia Bluetooth Speaker

Micro USB Cable

Aux-In Audio Cable

User Guide

II. DETAILS

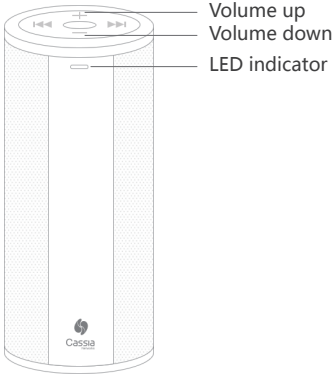
Volume up
Volume down
LED indicator
Cassia

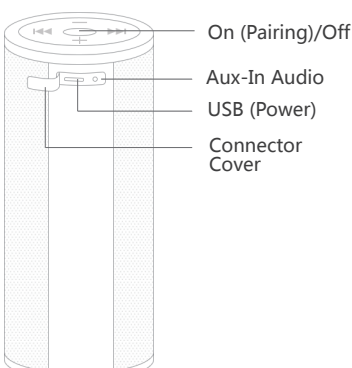
On (Pairing)/Off
Aux-In Audio
USB (Power)
Connector
Cover

Ⅲ. SETUP SPEAKER

1) Charge speaker – connect USB cable to speaker & to power source. Note: When fully charged, enjoy up to 8-hours of battery life.

2) Power on speaker – press and hold the "On" button on top of speaker for 7 seconds or until you hear audio tone "on" position

3) Pair to Cassia Hub – using Cassia App.

i. While LED on speaker is flashing fast blue, tap on upper right "+" button in Cassia App.
ii. Tap on Start button.
iii. When app finds Cassia Speaker model number, tap on "+" button just to the right of number.
iv. Once speaker is connected, it will slide off screen.
v. Tap upper left Back icon to return to Main app page.
vi. Tap on Speaker icon to further edit and setup speaker settings.

IV. USING SPEAKER WITH APP

1) For detailed instructions on using the Cassia App with Speaker, go to:
en.cassianetworks.com/pages/support

2) Download one of the following guides:
iOS Cassia Hub Application Guide
Android Cassia Hub Application Guide

For additional help, regulatory, and safety information, please go to:
en.cassianetworks.com/pages/support

Federal Communications Commission (FCC) Interference Statement

This device complies with Part 15 of the FCC rules. Operation is subject to the following two conditions: 1) this device may not cause harmful interference, and 2) this device must accept any interference received, including interference that may cause undesired operation.
This equipment generates, uses and can radiate radio frequency energy and, if not installed and used in accordance with the instructions, may cause harmful interference to radio communications. However, there is no guarantee that interference will not occur in a particular installation. If this equipment does cause harmful interference to radio or television reception, which can be determined by turning the equipment off and on, the user is encouraged to try to correct the interference by one or more of following measures:
— Reorient or relocate the receiving antenna.
— Increase the separation between the equipment

and receiver.

— Connect the equipment into an outlet on a circuit different from that to which the receiver is connected.

— Consult the dealer or an experienced radio/TV technician for help.

Note: Any changes or modifications not expressly approved by the party responsible for compliance could void the user's authority to operate the equipment.

RF exposure warning

This equipment must be installed and operated in accordance with provided instructions and the antenna(s) used for this transmitter must be installed to provide a separation distance of at least 20 cm from all persons and must not be co-located or operating in conjunction with any other antenna or transmitter. End-users and installers must be provided with antenna installation instructions and transmitter operating conditions for satisfying RF exposure compliance.

Beijing Cassia Networks Technology Co., Ltd.
www.cassianetworks.com

Cassia Networks

HAUT-PARLEUR BLUETOOTH CASSIA
GUIDE DE L'UTILISATEUR

DÉMARRAGE – FRANÇAIS

I.CONTENU DE L’ EMBALLAGE

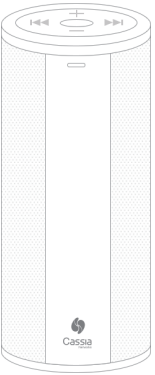

Haut-parleur Bluetooth Cassia Câble Micro USB

Câble audio entrée aux Guide de l'utilisateur

II. DÉTAILS DU PRODUIT

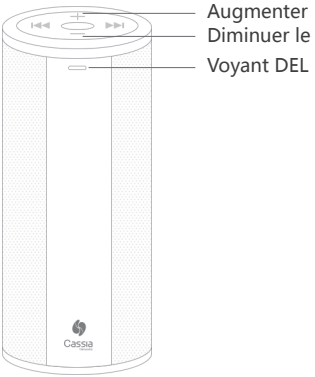

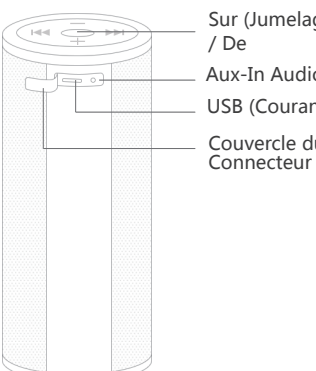

III. INSTALLATION DU SPEAKER

1) Parleur charge – connecter le câble USB à haut-parleur et de source d'alimentation
Remarque: Lorsque complètement chargée, rofitez jusqu'à 8 heures d'autonomie de batterie.

2) Puissance des haut-parleurs – appuyez et maintenez le bouton "On" sur le dessus du haut-parleur pendant 7 secondes ou jusqu'à ce que vous entendez une tonalité audio.

3) Paire Cassia Hub – en Cassia App en utilisant.

i. Alors que le LED clignote bleu rapide, appuyez en haut à droite le brouton "+" dans Cassia App.
ii. Appuyez sur le bouton Démarrer
iii. Lorsque l'application trouve le numéro de modèle Cassia Président, appuyez sur le bouton "+" juste à droite du numéro.
iv. Une fois enceinte est connectée, il va glisser hors de l'écran.
v. Tapez sur l'icône supérieure gauche Retour pour revenir à la page principale de l'application.
vi. Tapez sur l'icône pour faire avancer Président modifier et configurer les paramètres de haut-parleurs

IV. UTILISATION HAUT-PARLEUR AVEC APP

1) Pour obtenir des instructions détaillées sur l'utilisation de l'App Cassia, voir la page:
   en.cassianetworks.com/pages/support

2) Télécharger l'un des guides suivants:
   Guide de l' app Cassia Hub pour iOS
   Guide de l' app Cassia Hub pour Android

Pour toute aide supplémentaire, ou pour des informations sur la réglementation ou la sécurité, prière d' aller voir la page :
en.cassianetworks.com/pages/support

IC Radiation Exposure Statement for Canada

This device complies with Industry Canada licence-exempt RSS standard(s). Operation is subject to the following two conditions: (1) this device may not cause interference, and (2) this device must accept any interference, including interference that may cause undesired operation of the device.

Le présent appareil est conforme aux CNR d'Industrie Canada applicables aux appareils radio exempts de licence. L'exploitation est autorisée aux deux conditions suivantes : (1) l'appareil ne doit pas produire de brouillage, et (2) l'utilisateur de l'appareil doit accepter tout brouillage radioélectrique subi, même si le brouillage est susceptible d'en compromettre le fonctionnement.

Beijing Cassia Networks Technology Co., Ltd.
www.cassianetworks.com